GOLDfren®

For Michael 118

2022

Disc Brake Pads

Disc Brake Pads

Sintered brake pads for all models of off road & street M/Cycles, ATV's and Scooters.

Many pad material compound choices for recreational and street applications.

Optimal braking characteristics.

Permanent brake effect.

Long durability.

The Race Pad models come standardly with a heat insulator on the backing plate.

The Pad friction material is safe for the environment.

Friction materials AD, S3, S33 are certified by German Institute TÜV Saarland.

Material Chart

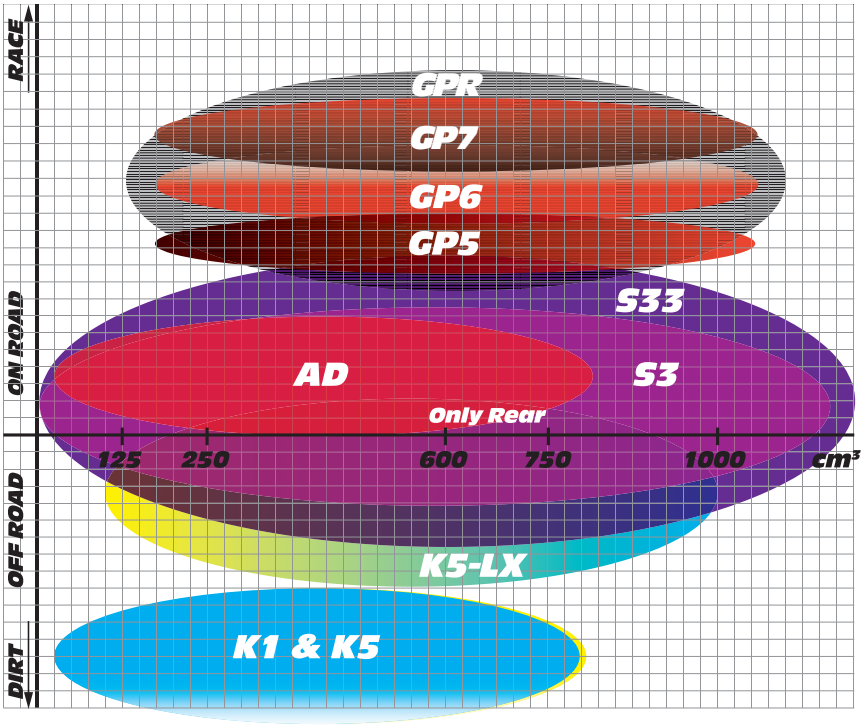

Installation Instructions

- **Verify the correct selection of the brake pads at the dealer's in accordance with the bike type and manufacturing year of your bike.**
- **Replace the brake pads as soon as the braking surface thickness has dropped below 2 mm.**
- **Protect the brake pad surfaces against grease, oil and other chemical substances.**
- **Clean and degrease the brake wheels prior to installation of new brake pads.**
- **Replace damaged brake wheels reducing the braking effect and, at the same time, shortening the lifetime of the brake pads.**
- **Install the brake pads directing their braking surfaces towards the brake wheel. Having completed the installation, check correct mounting and securing of the pads.**
- **Entrust a specialized servicing shop with the installation of brake pads when lacking experience.**
- **TÜV Saarland automobil GmbH – TÜV Rheinland Group certified.**

Running-In New Brake Pads

The correct way of running-in newly installed brake pads is the prerequisite for their long lifetime and for a reliable braking effect of the bike brakes. If possible, do not provide your motorbike with new brake wheels during running-in new brake pads.
Cleaning of the brake wheels using abrasive paper is recommended in case of their previous use with another lining material. After the installation of the brake pads, their fitting must be free and without excessive clamping in the brake mount.
Having revved up your bike, brake several times at lower speeds to achieve a contact surface of 80 to 90 per cent of the total area of the active brake pad surface between the brake wheel and the pads. Then brake the bike several times at higher speeds and allow the brake pad lining to get cooled while driving. After this running-in procedure, the brake pads may be normally used.

Dear Friends, Dear Commercial Partners,

Spacek Product commenced operations in 1991, manufacturing sintered disc brake pads for a wide range of both road and off-road motorcycle model applications, utilising „GOLDfren" as our chosen product brand logo. In the following 31 years since our commencement of manufacturing operations, we have today in 2022 become one of the largest aftermarket suppliers to world markets in this product sector (M/Cycle disc brake pads).

During this period of evolution and growth in our commercial operations; as a result of continuous heavy investment in R & D, we have successfully expanded our product range of sintered brake pads to incorporate aftermarket product to service the Aeronautical, Heavy-Duty Industrial Logistics Equipment (Lifting Cranes), Automotive Motorsport, Mountain Bike, and M/Cycle Motorsport Sidecar, commercial sales sectors.

To continue to endevour to meet our customers evolving demands in the intensely competitive and critical commercial world we all operate in, Spacek Product continues to invest heavily in product R & D to maintain development of „new generation" products, and to maintain our position at the technological forefront of the Sintered Friction Braking Industry. By basing our manufacturing facility in the Czech Republic which is world renowned for its engineering excellence since some 100 years past, we are able to offer our customers the perfect combination of world leading technology combined with a very competitive production cost base so that the customer and the consumer can purchase the best quality product at the most competitive price – with complete confidence in the performance, durability, and reliability of the product.

We commenced production in 2000 of a complete range of aftermarket Street and Motocross Disc Brake Rotors, applicable to most Japanese and European Sport and Touring M/Cycles, Scooters, ATV M/Cycles, and Motocross models. These Rotors are available in OEM round configuration, and in several other specialised aesthetic style configurations.

One of our current priorities in our manufacturing program is to introduce graphic design elements to differentiate and protect our GOLDfren branded product range from plagiarism from inferior product brands attempting to (without our authority) capitalise on our heavy investment in R & D and product promotion. It is our absolute priority to protect and to add value to our GOLDfren product reputation, to support and promote our customers marketing programs in their home markets throughout the world.

Dear friends, Dear commercial partners; we thank you for your current and past support, and we are sure that you continue to value our efforts to offer you the best possible product technology and pricing that your market demands, and we are confident that you will value our GOLDfren product range as a „priority and preferred" product group in your inventory and marketing strategies.

Yours Truly, Mr. Stanislav (Stan) Spacek

Managing Director / Spacek Product

Type	ccm		from	to	FL	FR	RL	RR	P
		A.P.LOCKHEED							
		2 Piston/2 Pin (CP2195/CP2696-38EO)			365				
		220-30 (2 Piston rear)			365				
		22-033 (2 Piston HD)			365				
		4 Piston Radial Mount / 4 Separate Pads (CP6688 - 8EOM/9EOM)			239				
		ACCOSSATO							
		108mm Radial Racing Caliper, 4 piston/4 pads			239				
		AGPZ01, 108 mm CNC Monoblock, 4 piston/4 pads			239				
		AGPZ02, 108 mm Forged Monoblock, 4 piston/4 pads			239				
		AGPZ03, 108 mm Forged Monoblock, 4 piston/4 pads			239				
		AGPZ04, 108 mm Forged Monoblock, 4 piston/4 pads			239				
		AGPZ06, 60 mm CNC Moto 3, 2 piston/2 pads			239				
CE	50		1987	1987	038			115	
	50	Enduro Codice	1989	1989	038			115	
CE	80		1987	1987	038			115	
KR	80		1987	1987	038			115	
		ADIVA SCOOTERS							
AD	125		2009	2011	174			099	
AD1	125	(3 Wheel Type)	2014	2015	137	137		137	
AR	125		2010	2011	174			099	
AD1	150	(3 Wheel Type)	2014	2015	137	137		137	
AD	200		2009	2011	174			099	
AR	200		2010	2011	174			099	
AD2	300	(2 Wheel Type)	2014	2015	152	152		286	
AD3	300	(3 Wheel Type)	2014	2015	137	137		286	
AD	400		2009	2011	152			152	
		ADLY							
		City Bird			114				
	25	Silver Fox	2000	2005	114				
AT	50	Air Tech 1	2008	2009	047				
NB	50	Noble	2008	2010	047				
P50	50	Panther	2002	2009	047				
RS	50	Supersonic	2006	2008	047	047		047	
RT	50				047				
SF	50	Silver Fox	2006	2009	047				
SS	50	1/11 Supersonic	2004	2005	047				
TB	50	Thunderbike	2008	2010	047				
	50	Cat	2001	2001	114				
	50	Cosy	2002	2006	047				
	50	Fox	2000	2000	114				
	50	Fox Plus	2001	2001	114				
	50	Jet	1996	1996	047				
	50	Pista	1996	1999	114				
	50	Predator	2002	2006	047	047			
	50	Road Tracer	2004	2006	114				
	50	Silver Fox	2000	2005	114				
	70	Fox Plus	2001	2005	114				
	70	Pista	2001	2005	114				
	80	Cosy	2002	2006	047				
RT	90	Road Tracer	2002	2006	114				
RT	100				047				
RT	100	Road Tracer	2002	2006	114				
SS	100	1/11 Supersonic	2004	2005	047				
	100	Cat	2001	2008	114				
	100	Jet	1996	1999	047				
	100	Panther	2002	2009	047				
	100	Predator	2002	2006	047	047			
	100	Road Tracer	2004	2006	114				
	100	Silver Fox	2001	2005	114				
GK	125	Buggie	2003	2007				047	
NB	125	Noble B (Rear drum model)	2008	2010	047				
NB	125	Noble D (Rear Disc Model)	2008	2009	047			047	
SS	125	B/D Supersonic	2004	2005	047			047	
TB	125	Thunderbike (Rear Disc Model)	2001	2001	047			047	
TB	125	Thunderbike (Rear Drum Model)	2001	2001	047				
	125	Cat	2001	2008	114				
	150	Crossroad Quad	2007	2009	047	047		047	
	150	Crusader Quad	2006	2006	047	047		047	
	150	Interceptor	2006	2006	047	047		047	
	150	Sport Quad	2008	2009	047	047		047	
	220	Crossroad Sentinal Quad			230	230		283	
	280	Canyon Quad	2008	2009	230	230		283	
	280	Huricane Quad	2008	2009	230	230		283	
RS	300	Quad	2007	2008	230	230		283	
XS	300	Quad	2007	2008	230	230		283	
	300	Canyon Quad	2008	2009	230	230		283	
	300	Crossroad Sentinal Quad	2008	2009	230	230		283	
	300	Crusader Quad	2005	2007	047	047		047	
	300	Huricane Quad	2008	2009	230	230		283	
	300	Interceptor	2005	2007	047	047		047	
	300	Interceptor Quad	2008	2008	288	288		283	
	300	Utility	2005	2007	230	230		283	

Type	ccm		from	to	FL	FR	RL	RR	P
	320	Huricane Quad	2008	2009	230	230		283	
	320	S Quad	2008	2008	230	230		283	
	500	S Quad	2008	2008	230	230		283	
		AEON							
	50	Aero (Scooter)	2006	2006	047				
	50	Cobra	2006	2015				047	
	50	Nox (Scooter)	2006	2006	047				
	50	Regal (Scooter)	2006	2006	047				
	50	Revo R Cobra 2 (AT34 Type) (Quad)	2004	2006				047	
	60	Cobra (AT30 Type) (Quad)	2004	2011				047	
	90	Regal (Scooter)	2006	2006	047				
	100	Aero (Scooter)	2006	2006	047				
	100	Nox (Scooter)	2006	2006	047				
	100	Pulsar (Scooter)	2006	2006	047				
	100	Revo R Cobra 2 (AT34 Type) (Quad)	2004	2011				047	
	125	Elite (4T)	2012	2013	334			005	
	125	MY			334			005	
	125	Nox (Scooter)	2006	2006	047				
	125	Overland (AT08) (Quad)	2002	2006				009	
	125	OZ (4T)	2013	2013	334				
	125	Pulsar (Scooter)	2006	2006	047				
	125	Sporty (AT05 Type) (Quad)	2001	2005				047	
	125	Urban (4T)	2012	2013	334			005	
	125	Urban (Scooter)	2011	2011	334			047	
	150	Nox (Scooter)	2006	2006	047				
	150	OZ (4T)	2013	2013	334				
	150	Pulsar (Scooter)	2006	2006	047				
	180	Cobra RS (Quad)	2006	2006				009	
	180	Overland (AT08) (Quad)	2002	2011				009	
	180	Sporty (AT05 Type) (Quad)	2004	2005				047	
	200	Elite i (Scooter)	2011	2011	334			047	
	200	Two Hundred (Quad)	2005	2005	047	047		047	
	220	Cobra (Quad)	2006	2011	047	047		005	
	300	Cobra S	2012	2015	047	047		005	
	300	Cube (Side x Side)	2011	2011	047	047		005	
	300	Overland (AT20) (Quad)	2006	2007	047	047		005	
	350	Cobra (Quad)	2010	2011	047	047		005	
	350	Crossland RX	2011	2011	047	047		009	
	350	Cube (Side x Side)	2013	2015	047	047		005	
	350	i Elite (4T)	2012	2013	334				
	350	i Urban (4T)	2013	2013	334				
	350	Urban i (Scooter)	2011	2011	334			047	
	400	Cobra Supermoto (Quad)	2013	2015	047	047		005	
	400	Cobra (Quad)	2010	2015	047	047		005	
	400	Crossland (2x4)	2012	2015	047	047		002	047
	400	Crossland (4x4)	2012	2015	047	047		002	047
	400	i Elite (ABS)	2014	2015	331				
	600	Crosslander i	2014	2015	047	047		162	047
	600	Overland (Quad)	2010	2011	230	230		005	
		AGRALE							
		Elefantre 30.0			038				
		AJP							
PR3	125	Enduro	2008	2012	122			168, 198	
PR3	125	Enduro	2013	2015	278			364	
PR3	125	Enduro Pro	2010	2012	122			168, 198	
PR3	125	Enduro Pro	2013	2015	278			364	
PR3	125	Extreme	2013	2015	278			364	
PR3	125	Supermoto	2008	2012	122			168, 198	
PR3	125	Supermoto	2013	2015	278			364	
PR3	125	Supermoto Pro	2010	2011	098, 107			168, 198	
PR3	125	Trail	2011	2012	122			168, 198	
PR4	125	Enduro	2004	2009	095			168, 198	
PR4	125	Enduro	2010	2012	122			289	
PR4	125	Enduro	2013	2015	278			364	
PR4	125	Enduro Pro	2010	2012	122			289	
PR4	125	Enduro Pro	2013	2015	278			364	
PR4	125	Supermoto	2004	2009	095			168, 198	
PR4	125	Supermoto	2010	2012	122			289	
PR4	125	Supermoto	2013	2015	278			364	
PR4	125	Supermoto Pro	2010	2011	122			289	
PR4	125	Trail	2013	2015	278			364	
PR3	200	Enduro	2008	2011	122			168, 198	
PR3	200	Enduro	2012	2014	122			364	
PR3	200	Enduro Pro	2010	2011	122			168, 198	
PR3	200	Enduro Pro	2012	2014	122			364	
PR3	200	M/X Pro	2010	2011	122			168, 198	
PR3	200	M/X Pro	2012	2014	122			364	
PR3	200	MX	2010	2011	122			168, 198	
PR3	200	Supermoto	2008	2011	122			168, 198	
PR3	200	Supermoto	2012	2014	122			364	

Type	ccm		from	to	FL	FR	RL	RR	P
PR3	200	Supermoto Pro	2010	2011	122			168, 198	
PR4	200	Enduro	2004	2009	095			168, 198	
PR4	200	Enduro	2010	2011	122			289	
PR4	200	Enduro	2012	2014	122			364	
PR4	200	Enduro Pro	2010	2011	122			289	
PR4	200	Enduro Pro	2012	2014	122			364	
PR4	200	Extreme	2012	2014	122			364	
PR4	200	SM Pro	2010	2011	122			289	
PR4	200	Supermoto	2004	2009	095			121	
PR4	200	Supermoto	2010	2011	122			198, 289	
PR4	200	Supermoto	2012	2014	122			364	
PR3	240	MX Pro	2013	2015	278			364	
PR4	240	Extreme	2013	2015	278			364	
PR5	250	Enduro	2009	2009	041			003	
PR5	250	Enduro	2010	2015	278			364	
PR5	250	Extreme	2012	2015	278			364	
PR5	250	Supermoto	2009	2009	041			003	
PR5	250	Supermoto	2010	2015	278			364	
		AJS							
DD	50	E/E2 Regal Raptor	2004	2006	144				
JSM	50	Motard	2012	2015	011			144	
	50	Crazy Naked	2010	2011	332				
	50	Crazy Naked	2013	2014	174			284	
	50	Digita	2013	2015	136				
	50	Exactly	2008	2011	136				
	50	Firefox	2013	2015	136				
CR3	125	Regal Raptor	2006	2006	210			221	
DD	125	E Mk2 Regal Raptor (Cast wheels)	2010	2014	011			332	
DD	125	E Regal Raptor	2004	2006	332				
EOS	125	Regal Raptor	2009	2015	011			332	
JS	125	6C Eco Custom	2012	2014	011				
JS	125	E (Eco-2 125)	2009	2015	144				
JS	125	-E/E2 (Eco 125)	2007	2009	144				
JSM	125	Motard	2010	2015	011			144	
JSM	125	Trail	2013	2014	011			332	
NAC 12	125	cc	2009	2014	011			011	
NKT 1	125	Naked	2008	2009	332			332	
	125	Bobber (Custom)	2010	2015	011			332	
	125	Daytona	2013	2015	011			332	
	125	Daytona E	2010	2010	011				
	125	Exactly Scooter (4T)	2008	2015	136				
DD	250	E Regal Raptor	2004	2009	332				
NKT 2	250	Naked	2008	2009	332			332	
E-9PB	350		2013	2014	011			332	
EOS	350		2013	2014	011			332	
		ALCON							
		6 Piston Race Caliper with 4.0 mm pin set			227				
		ALFER							
MC	80		1987	1987	038			121	
MC	125		1987	1987	038				
MC	125		1988	1988	019			038	
VR	125	Raider	2012	2013	122			047	
VRE	125	4T	1998	1998	029			023	
VX	125	Explorer	2012	2013	122			047	
VX	200	Explorer	2012	2013	122			047	
AR	250		1993	1993	041			005	
GR	250	Enduro	1985	1987	038				
GR	250	Enduro	1988	1988	019			038	
MC	250		1985	1986	038				
MC	250		1987	1987	038			038	
MC	250		1988	1988	019			038	
VR	250		1998	2013	031			023	
	250	Diferente Enduro	2001	2001	029			023	
	250	Diverdita Super Motard	2001	2001	029			023	
GR	300	Enduro	1988	1988	019			038	
EVX	400	Electric	2012	2013	122			176	
		ALTA MOTORS (ELECTRIC)							
		Redshift MX	2016	2018	031			191	
		Redshift SM	2016	2018	141			191	
		AMERICAN SUSPENSION AFTERMARKET CALIPERS							
B17		Mach 8 Standard mount 2 Piston Caliper			081				
B17		Phantom 2 piston Brake Caliper			081				
P26		2 Piston Caliper			081				
		AP RACING							
		CP-4488 Radial 4 piston Monoblock			218	218			
		APACHE							
RLX	50							047	
	50	Mini Tomahawk (2T)	2008	2009				216	
F	100				005			005	
RLX	100							047	
ZX	100							005	
RLX	110							047	
RLX	150	S						009	

Type	ccm		from	to	FL	FR	RL	RR	P
RLX	250	S/SX (Mk1) Rear disc model			005	005		002	
RLX	320	S			005	005		005	
RLX	320	Utility			005	005		005	
RLX	450	S			005	005		005	
		APRILIA							
		Amico (All Models)	1996	1998	098, 107				
		Gulliver (All Models)	1995	1998	098, 107				
		Rally A/C (All Models)	1995	2002	098, 107				
		Rally L/C (All Models)	1996	2000	098, 107	098, 107		098, 107	
		Sonic (All Models)	1998	2008	098, 107				
	50	Scarabeo (2T) (Rear drum model) (PFG00/TH000)	2000	2005	098, 107				
AF1	50	Futura	1990	1992	115			096	
MX	50		2003	2005	122			096	
RS	50	(6 Bolt Fixing Front & Rear)	1993	1998	038			096	
RS	50	(5 bolt fixing front & rear)	1999	2005	122			096	
RS	50	(Radial Caliper - 6 bolt fixing Front & Rear)	2006	2011	152			121	
RS4	50	(4T) (J.Juan Calipers)	2011	2020	064			047	
RS-4	50	(4T) (AJP rear caliper)	2011	2014	233			289	
RX	50	C/CD	1995	2004	122			096	
RX	50	Mini Experience	2004	2004	173				
RX	50	Racing	2004	2006	122			096	
RX	50	Factory	2006	2020	122			121	
RX3-5	50	Marce (M/N/P/R)	1991	1994	095			096	
SM	50		2011	2012	121			121	
SR	50	A/C (GP/LB/LF)	1993	1996	098, 107				
SR	50	(LC)	1994	1996	098, 107				
SR	50	Stealth/Racing (LC) (MZC0)	1997	1999	098, 107			098	
SR	50	WWW (A/C) (LYH100)	1997	2001	098, 107				
SR	50	H20 (Ditech) (RLA1/RLB1)	2000	2003	098, 107			150	
SR	50	Ditech (LC)(RLD100)	2002	2003	098, 107			150	
SR	50	Street (LC/2T) (TE00/TEA00)	2003	2015	098, 107			150	
SR	50	R Factory (LC/2T)(VFB00/VFD00)	2004	2018	098, 107			150	
SR	50	R SBK Alitalia (Replica) (LC)	2010	2011	098, 107			150	
SR	50	Motard (2T)	2012	2015	293				
SR	50	Motard (4T/4V)	2012	2015	293				
SX	50		2006	2020	122			121	
SX	50	Limited Edition	2014	2016	122			047	
SX	50	Factory	2019	2020	122			047	
	50	Europa	1990	1992	115			096	
	50	Classic	1992	2001	115				
	50	Pegaso (2 pads both same shape modficiation A)	1992	1994	010				
	50	Pegaso (Pad with hook on one side modification B)	1992	1994	122				
	50	Scarabeo (2T) (H2/HL) Front disc Model	1993	1997	098, 107				
	50	Gulliver (All models)	1995	1998	098				
	50	Rally (All Models) A/C	1995	2002	098				
	50	Rally (All Models) L/C	1996	2000	098				
	50	Area 51	1998	2002	098, 107			098, 107	
	50	Scarabeo (2T) (PF0100) (Rear Drum Model)	1998	1999	098, 107			098	
	50	Sonic (All Models)	1998	2008	098, 107				
	50	Habana/Habana Custom	1999	2002	098, 107				
	50	Mojito Custom (120mm Ø rear drum)	1999	2003	098, 107				
	50	Mojito Retro (120mm Ø rear drum)	1999	2003	098, 107				
	50	Scarabeo (2T) (Rear disc model) (PFG00/TH000)	2000	2005	098, 107			098	
	50	Scarabeo (4T) (TG000)	2002	2006	098, 107				
	50	Scarabeo Ditech (2T) (SCA00)	2002	2006	098, 107			150	
	50	Mojito Custom (110mm Ø rear drum)	2004	2012	098, 107				
	50	Tuono	2004	2004	122			096	
	50	Scarabeo Street (2T) (TH00/THE00)	2005	2009	098, 107				
	50	Scarabeo (4T) (TGA00/TGB00)	2006	2009	098, 107				
	50	Sport City One (2T)	2008	2011	293				
	50	Sport City One (4T)	2008	2009	293				
	100	Scarabeo (2T)	2000	2000	170				
	100	Scarabeo (4T) (SA000/VA000)	2001	2009	170				
AF	125		1990	1991				038	
AF1	125		1987	1987	006			038	
AF1	125		1988	1989	019			038	
AF1	125		1990	1991	019			038	
AF-1	125		1989	1991	019			038	
ETX	125		1999	2001	122			094	
MX	125		2004	2006	031				

Type	ccm		from	to	FL	FR	RL	RR	P
RS	125	(6 bolt rear disc / 2T)	1992	1998	019			038	
RS	125	(5 bolt rear disc/2T)	1999	2005	019			038	
RS	125	(Radial Caliper model) 2T	2006	2012	251			150	
RS	125	(4T)	2017	2018	233			047	
RS	125	GP Replica (4T)	2018	2020	233			047	
RS4	125	(4T) (AJP Calipers)	2011	2020	233			289	
RS4	125	(4T) (J.Juan Calipers)	2011	2020	064			047	
RX	125		1992	1999	122			094	
RX	125		2000	2001	031			094	
RX	125	(AJP Rear Caliper)	2008	2012	031			289	
RX	125	(Brembo Front & Grimeca Rear Caliper)	2008	2012	031			005	
RX	125		2018	2020				047	
SM	125		2011	2012	121			121	
SR	125		1999	2002	170				
SR	125	Max (4T)	2011	2015	293			293	
SR	125	Motard (4T)	2012	2015	293				
SX	125	(Grimeca Caliper)	2008	2013	031			005	
SX	125		2011	2012	121			121	
SX	125		2018	2020				047	
TX	125		1986	1988	121				
	125	Red Rose (Cast Wheel)	1987	1987	010			038	
	125	Red Rose (Spoke Wheel)	1988	1994	010				
	125	Tuareg Rally	1989	1989	089			094	
	125	Tuareg Rally (L/M)	1990	1991	010			094	
	125	Pegaso	1991	1991	095			094	
	125	Pegaso KAT	1994	1995	122			094	
	125	Classic	1995	2001	095				
	125	Leonardo	1996	1998	098, 107			098, 107	
	125	Leonardo ST/SP	1999	2004	170			170	
	125	Scarabeo (Rotax engine)	1999	2002	010				
	125	Habana / Habana Custom	2000	2002	170				
	125	Atlantic	2003	2008	193			150	
	125	Mojito	2003	2012	170				
	125	Mojito Custom	2003	2012	170				
	125	Scarabeo (Piaggio engine)	2003	2003	010				
	125	Tuono	2003	2004	019			038	
	125	Scarabeo GT	2004	2006	193			150	
	125	Sport City	2004	2008	010			150	
	125	Leonardo	2005	2006	170			170	
	125	Scarabeo	2007	2010	193			150	
	125	Sport City Cube	2008	2012	010			150	
	125	Sport City One	2008	2011	293				
	125	Atlantic	2010	2010	193			150	
	125	Tuono (ABS)	2017	2020	233			047	
	125	Tuareg Rally (N)		1993	095				
SR	150		1999	2002	170				
	150	Leonardo	1997	1998	098, 107			107	
	150	Leonardo ST/SP	1999	2004	170			170	
	150	Scarabeo	1999	2002	010			150	
	200	Scarabeo	1999	2002	010			150	
	200	Atlantic	2003	2005	193			150	
	200	Scarabeo	2003	2003	010			150	
	200	Sport City	2004	2008	010			150	
	200	Scarabeo	2007	2009	193			150	
	200	Sport City Cube	2008	2009	010			150	
TRX	240	M	1989	1989	120			120	
TX	240		1986	1988	121				
RS	250		1995	1997	064	064		038	
RS	250		1998	2002	141	141		038	
RX	250		1986	1986	038				
SM	250		2011	2012	121				
	250	Leonardo ST/SP	2000	2004	010			150	
	250	Atlantic	2003	2005	193			150	
	250	Atlantic ie	2006	2008	193			150	
	250	Scarabeo	2006	2006	193			150	
	250	Sport City ie	2006	2008	010	010		150	
	250	Scarabeo ie	2007	2010	193			150	
	250	Sport City Cube	2008	2009	010	010		150	
	280	R Climber	1992	1993	121				
	280	Climber	1994	1996	121			066	
SR	300	Max (4T)	2011	2015	293			293	
	300	Leonardo (Grimeca cal.)	2005	2006	010			150	
	300	Sport City Cube	2008	2012	010	010		150	
	300	Scarabeo S	2009	2010	193			150	
	300	Atlantic	2010	2011	193			150	
	300	Sport Cube Blackline	2011	2011	010	010		150	
TX	311		1986	1988	121			121	
	400	Atlantic Sprint	2005	2008	193			150	
	400	Scarabeo ie	2007	2008	010			150	
MXV	450		2009	2013	041			187	
RXV	450	Enduro	2006	2013	041			187	
SXV	450	Supermotard	2006	2013	231			187	
B	500	CR	2002	2002	064				
B	500	MT	2002	2002	064				

Type	ccm		from	to	FL	FR	RL	RR	P
	500	Atlantic	2002	2004	223	223		150	
	500	Scarabeo ABS	2003	2006	010	010		150	
	500	Atlantic Sprint	2005	2008	193			150	
	500	Scarabeo Light	2006	2006	010	010		150	
	500	Scarabeo ie	2007	2009	010	010		150	
RXV	550	Enduro	2006	2013	041			187	
SXV	550	Supermotard	2006	2013	231			187	
	600	Tuareg Wind	1989	1989	089			094	
	600	Pegaso	1991	1991	095			094	
	650	Pegaso	1991	1996	105			094	
	650	Moto 6.5	1995	2001	106			094	
	650	Pegaso	1997	2000	106			094	
	650	Pegaso ie	2001	2004	106			023	
	650	Pegaso Strada	2005	2006	141			023	
	650	Pegaso Factory	2006	2008	141			023	
	650	Pegaso Trial	2006	2008	106			023	
	650	Pegaso	2007	2008	141			023	
SL	750	Shiver (RA000)	2007	2010	251	251		023	
SL	750	Shiver GT	2009	2010	251	251		023	
	750	Dorsoduro (ABS)	2008	2016	251	251		023	
	750	Dorsoduro Factory	2010	2013	141	141		023	
	750	Dorsoduro Factory (ABS)	2010	2012	141	141		023	
	750	Shiver (RAE00/STD & ABS)	2010	2016	251	251		023	
	750	Shiver GT (ABS)	2010	2012	251	251		023	
SRV	850		2012	2014	031	031		293	303
	850	Mana (ABS)	2008	2013	251	251		010	303
	850	Mana (Non ABS)	2008	2011	251	251		010	303
	850	Mana GT (ABS Model)	2009	2016	251	251		010	303
	900	Dorsoduro (ABS)	2017	2020	251	251		023	
	900	Shiver (ABS)	2017	2020	251	251		023	
ETV	1000	Caponord (Non ABS - Bolt Fixing)	2001	2003	106	106		152	
ETV	1000	Caponord Rally Raid (Non ABS - Bush Fixing)	2003	2003	106	106		152	
ETV	1000	Caponord (ABS - Bush fixing)	2004	2007	106	106		152	
RST	1000	Futura	2001	2004	141	141		031	
RSV	1000	Mille	1998	2000	141	141		152	
RSV	1000	Mille SP	1999	2000	141	141		152	
RSV	1000	Mille R	2000	2000	141	141		152	
RSV	1000	Mille	2001	2002	177	177		152	
RSV	1000	Mille R	2001	2002	177	177		152	
RSV	1000	R Tuono	2002	2006	141	141		152	
RSV	1000	Mille (Radial Caliper)	2003	2003	177	177		152	
RSV	1000	Mille R (Radial Caliper)	2003	2003	177	177		152	
RSV	1000	R	2004	2008	177	177		152	
RSV	1000	R Factory	2004	2008	177	177		152	
RSV	1000	R Factory (Radial Caliper / 4pad)	2004	2008	177	177		152	
RSV	1000	R Racing (Radial Caliper/4pad)	2004	2008	177	177		152	
RSV	1000	R Tuono (Radial Caliper / 2 pin pad fixing)	2007	2008	141	141		152	
RSV4	1000	Factory	2009	2010	258	258		152	
RSV4	1000	R	2010	2010	258	258		152	
RSV4	1000	Factory APRC	2011	2013	258	258		152	
RSV4	1000	R APRC	2011	2013	258	258		152	
RSV4	1000	Factory APRC ABS	2013	2014	258	258		152	
RSV4	1000	R APRC ABS	2013	2014	258	258		152	
RSV4	1000	RF	2015	2018	258	258		152	
RSV4	1000	RR	2015	2018	258	258		152	
SL	1000	Falco	2000	2004	141	141		152	
	1000	Tuono R (Radial Caliper / 2 pad type)	2002	2010	141	141		152	
	1000	Tuono R (Radial Caliper / 4 Pad Type)	2002	2005	141	141		152	
	1000	Tuono R Factory (Radial Caliper / 4 pad type)	2006	2010	177	177		152	
	1000	Tuono V4R	2011	2012	141	141		152	
	1000	Tuono V4R-APRC	2011	2013	141	141		152	
	1000	Tuono V4R APRC ABS	2013	2014	328	328		152	
RSV4	1100	Factory	2019	2020	258	258		152	
RSV4	1100	RR	2019	2020	258	258		152	
	1100	Tuono Factory V4	2015	2016	328	328		152	
	1100	Tuono RR V4	2015	2016	328	328		152	
	1100	Tuono Factory V4	2017	2018	258	258		152	
	1100	Tuono RR	2019	2020	258	258		152	
	1100	Tuono V4 Factory	2019	2020	258	258		152	
	1200	Dorsoduro	2011	2012	141	141		023	
	1200	Dorsoduro ATC/ABS	2011	2014	141	141		023	
	1200	Caponord (Cast Wheels)	2013	2016	328	328		023	
	1200	Caponord Rally (Spoke Wheels)	2015	2020	328	328		023	
		ARCTIC CAT							
		Most Models	1996	2004	232			232	
DVX	50	(Y6)	2006	2006				332	
DVX	50	Sport (4T)	2008	2008				183	
	50	Auto Youth (4x4)	2008	2008				183	
DVX	90		2006	2014				183	
DVX	90		2018	2018				230	
DVX	90	(2x4) (4T) Youth (Rear disc model)	2006	2006				183	
DVX	90	SE	2009	2009				183	
	90	(Reverse gear model)	2010	2014				183	
	90	Alterra	2017	2019				230	

Type	ccm		from	to	FL	FR	RL	RR	P
	90	SE	2009	2009				183	
	150	Utility 2x4	2009	2014				183	
	150	Utility 2x4	2015	2018				230	
DVX	250	Sport	2006	2008	230	230		140	
	250	(2x4) (Utility)	2005	2009	254	254		254	
	250	2x4	1999	2004	232	232		232	
	250	2x4 (Manual Hand Brake)	1999	2004				405	
	250	4x4	2000	2004	232	232		232	
	250	4x4 (Manual Hand Brake)	2000	2004				405	
	250	Utility (4x4)	2005	2008	254	254		254	
DVX	300		2009	2014	230	230		140	
	300	(2x4) (Utility)	2005	2005	254	254		254	
	300	2x4 (Manual Hand Brake)	1998	2004				405	
	300	4x4 (Manual Hand Brake)	1998	2005				405	
	300	Alterra	2015	2018	230			230	
	300	Arctic Cat 2x4	1998	2004	232	232		232	
	300	Arctic Cat 4x4	1998	2004	232	232		232	
	300	ATV	2010	2012	254	254		254	
	300	Utility (2x4)	2010	2014	230	230		230	
	350	ATV	2012	2012	254	254		254	
	366	4x4 Auto Utility	2008	2009	254	254		254	
	366	SE	2010	2010	254	254		254	
	375	2x4 (Manual Hand Brake)	2002	2002				405	
	375	4x4 (Manual Hand Brake)	2002	2002				405	
	375	Arctic Cat 2x4/4x4	2002	2002	232	232		232	
DVX	400	Sport (2x4)	2004	2008	007	007		092	
DVX	400	TS Sport	2006	2007	007	007		092	
TBX	400	4x4 (Manual Hand Brake)	2004	2004				405	
	400	2x4 (FIS) (Manual Hand Brake)	2002	2004				405	
	400	2x4 (FIS) Aut. (Manual Hand Brake)	2003	2004				405	
	400	2x4 (Manual Hand Brake)	1998	2002				405	
	400	4x4 (FIS) (Manual Hand Brake)	2002	2004				405	
	400	4x4 (FIS) Aut. (Manual Hand Brake)	2003	2004				405	
	400	4x4 (Manual Hand Brake)	1998	2004				405	
	400	4x4 Auto LE Utility	2005	2007	254	254		254	
	400	4x4 Auto TBX Utility	2005	2006	254	254		254	
	400	4x4 Auto TRV Multirider	2006	2006	254	254		254	
	400	4x4 Auto TRV Plus Multirider	2007	2007	254	254		254	
	400	4x4 Auto Utility	2005	2008	254	254		254	
	400	4x4 Auto VP Utility	2005	2006	254	254		254	
	400	4x4 VP Utility	2005	2006	254	254		254	
	400	Alterra	2016	2020	254	254		254	
	400	ATV (Core Mid Size)	2013	2014	254	254		254	
	400	Bear Cat 2x4/4x4	1998	2004	232	232		232	
	400	TRV	2013	2013	254	254		254	
	400	TRV	2009	2009	254	254		254	
	400	TRV H1	2010	2010	254	254		254	
	425	i	2012	2012	254	254		254	
	425	i SE	2012	2012	254	254		254	
XC	450	i	2011	2012	254	254		254	
	450	Alterra	2016	2016	254	254		254	
	450	ATV (Core/Midsize)	2013	2014	254	254		254	
	450	H1 EFi	2010	2010	254	254		254	
	450	i	2011	2012	254	254		254	
	450	i GT	2012	2012	254	254		254	
	450	i TRV	2011	2011	254	254		254	
	450	i XC	2013	2014	254	254		254	
	450	TRV	2011	2012	254	254		254	
	454	Arctic Cat 4x4	1998	1998	232	232		232	
	454	Bear Cat 2x4/4x4	1996	1997	232	232		232	
	454	Bear Cat 2x4/4x4 (Manual Hand Brake)	1998	1998				405	
TBX	500	4x4 (Manual Hand Brake)	2003	2004				405	
TBX	500	4x4 Aut (Manual Hand Brake)	2002	2002				405	
TRV	500	4x4 (Manual Hand Brake)	2003	2004				405	
	500	2x4 (FIS) (Manual Hand Brake)	2002	2002				405	
	500	2x4 (Manual Hand Brake)	2002	2002				405	
	500	4x4 (FIS) (Manual Hand Brake)	2002	2003				405	
	500	4x4 (FIS) Aut. (Manual Hand Brake)	2002	2003				405	
	500	4x4 (Manual Hand Brake)	1998	2002				405	
	500	4x4 Auto LE Utility	2005	2006	254	254		254	
	500	4x4 Auto TBX Utility	2005	2006	254	254		254	
	500	4x4 Auto TRV Multirider	2005	2008	254	254		254	
	500	4x4 Auto Utility	2005	2008	254	254		254	
	500	4x4 Utility	1998	2009	232	232		232	
	500	4x4 Utility (Manual G-Box)	2005	2009	254	254		254	
	500	Alterra	2016	2020	254	254		254	
	500	ATV (Midsize)	2013	2014	254	254		254	
	500	ATV XT (Midsize)	2013	2014	254	254		254	
	500	Prowler	2018	2019	230			230	
	500	Prowler HDX	2014	2014	254	254		254	
	500	Prowler HDX LTD	2014	2014	254	254		254	
	500	Prowler HDX XT	2014	2020	254	254		254	
	500	TRV (Core/2 Up)	2013	2014	254	254		254	
TRV	550	(GT EFI 2 Up)	2011	2012	254	254		254	
	550	Alterra TRV and XT	2016	2020	254	254		254	
	550	ATV (Mid Size)	2013	2014	254	254		254	

Type	ccm		from	to	FL	FR	RL	RR	P
	550	ATV XT (Mid Size)	2013	2014	254	254		254	
	550	H1 EFI	2009	2010	254	254		254	
	550	i	2011	2012	254	254		254	
	550	i GT	2011	2012	254	254		254	
	550	i GT TRV	2011	2011	254	254		254	
	550	i TRV Cruiser	2011	2011	254	254		254	
	550	LTD EFI	2011	2012	254	254		254	
	550	Prowler 4x4	2009	2014	254	254		254	
	550	S	2010	2010	254	254		254	
	550	S Ltd	2010	2010	254	254		254	
	550	TRV	2011	2011	254	254		254	
	550	TRV Cruiser	2011	2011	254	254		254	
	550	TRV EFi	2009	2010	254	254		254	
	550	TRV Hi EFi LE	2009	2010	254	254		254	
	550	TRV Ltd (2 Up)	2013	2014	254	254		254	
	550	TRV S GT	2010	2010	254	254		254	
	570	Alterra EPS and XT	2019	2020	254	254		254	
TBX	650		2009	2009	254	254		254	
	650	H1	2010	2010	254	254		254	
	650	H1 4x4 Auto LE Utility	2007	2007	254	254		254	
	650	H1 4x4 Auto TBX Utility	2007	2007	254	254		254	
	650	H1 4x4 Auto Utility	2007	2007	254	254		254	
	650	H1 4x4 SE Utility	2006	2006	254	254		254	
	650	H1 4x4 TRV Plus LE Multirider	2007	2007	254	254		254	
	650	H1 Mudpro	2010	2011	254	254		254	
	650	H1 Prowler	2007	2007	254	254		254	
	650	H1 TRV	2009	2009	254	254		254	
	650	Prowler 4x4 Auto/M4	2008	2008	254	254		254	
	650	V2 4x4 Auto LE Utility	2004	2005	254	254		254	
	650	V2 4x4 Auto Utility	2004	2006	254	254		254	
	650	V2 4x4 LE TS Utility	2006	2006	254	254		254	
HDX	700	i Prowler	2011	2014	254	254		254	
XR	700	LTD and XT	2015	2020	254	254		254	
XTX	700		2010	2011	254	254		254	
XTX	700	Hi EFI Prowler	2009	2009	254	254		254	
XTX	700	Hi LE Prowler	2008	2008	254	254		254	
XTX	700	i Prowler	2011	2017	254	254		254	
	700	Alterra inc XT and Mudpro	2016	2020	254	254		254	
	700	Alterra TBX	2017	2020	254	254		254	
	700	Alterra VLX	2017	2020	254	254		254	
	700	ATV Diesel	2012	2014	254	254		254	
	700	ATV Ltd	2012	2014	254	254		254	
	700	ATV XT	2013	2014	254	254		254	
	700	ATV/Core	2013	2014	254	254		254	
	700	Diesel Utility	2011	2012	254	254		254	
	700	EFi 4x4 Auto M4	2008	2008	254	254		254	
	700	EFi 4x4 Auto TRV LE	2008	2008	254	254		254	
	700	EFi 4x4 SE Utility	2006	2006	254	254		254	
	700	EFi 4x4 Utility LE Auto	2007	2007	254	254		254	
	700	EFi Cruiser	2008	2008	254	254		254	
	700	H1 EFi	2009	2010	254	254		254	
	700	H1 EFi 4x4 Auto SE	2008	2009	254	254		254	
	700	H1 EFi LE	2009	2010	254	254		254	
	700	H1 EFi Mudpro	2009	2011	254	254		254	
	700	i	2011	2012	254	254		254	
	700	i GT	2011	2012	254	254		254	
	700	i LTD	2011	2012	254	254		254	
	700	Mudpro i LTD	2011	2012	254	254		254	
	700	Mudpro	2010	2011	254	254		254	
	700	Mudpro i LTD	2011	2011	254	254		254	
	700	Prowler HDX LTD	2014	2014	254	254		254	
	700	S	2010	2010	254	254		254	
	700	S Ltd	2010	2010	254	254		254	
	700	Super Duty Diesel	2010	2011	254	254		254	
	700	TBX H1 EFi	2010	2010	254	254		254	
	700	TBX Ltd	2011	2011	254	254		254	
	700	TRV	2011	2011	254	254		254	
	700	TRV Cruiser	2011	2011	254	254		254	
	700	TRV GT	2011	2011	254	254		254	
	700	TRV H1 EFi Cruiser	2009	2010	254	254		254	
	700	TRV XT	2013	2014	254	254		254	
	700	Wildcat Trail XT inc LTD	2015	2020	254	254		254	
XTZ	1000		2010	2014	254	254		254	
XTZ	1000	H2 EFi Prowler	2009	2009	254	254		254	
	1000	Alterra TRV, XT and EPS	2017	2020	254	254		254	
	1000	GT	2011	2012	254	254		254	
	1000	Mudpro H2 EFi	2011	2012	254	254		254	
	1000	Mudpro LTD	2013	2014	254	254		254	
	1000	Mudpro SE EPS	2016	2020	254	254		254	
	1000	Thundercat H2	2008	2010	254	254		254	
	1000	Thundercat H2 LE	2010	2010	254	254		254	
	1000	TRV Cruiser	2011	2011	254	254		254	
	1000	TRV H2 EFi	2010	2010	254	254		254	
	1000	TRV H2 EFI Cruiser 2 Up	2009	2010	254	254		254	
	1000	Wildcat	2013	2014	254	254	254	254	

Type	ccm		from	to	FL	FR	RL	RR	P
	1000	Wildcat 4	2013	2016	347	347	254	254	
	1000	Wildcat 4X	2014	2016	347	347	254	254	
	1000	Wildcat 4X LTD	2014	2015	347	347		254	
	1000	Wildcat i GTi	2012	2012	254	254	254	254	
	1000	Wildcat Ltd	2013	2014	254	254	254	254	
	1000	XT	2013	2014	254	254		254	
		ASPES							
	50	Vega Hybrid	2010	2014	334				
	125	Duma			184				
	125	Vega Hybrid	2011	2014	011				
	150	Perseo Hybrid	2011	2014	144			011	
		ATALA							
AT10	50	Byte	1997	2000	098, 107				
		Hacker	1997	1997	098, 107				
		Hacker LC	1997	1997	098, 107				
		Hacker Racing	1997	1997	098, 107				
		ATK							
GT	250	R V-Twin Sport	2011	2011	011	011		011	
GV	250	V-Twin	2011	2011		011			
GT	650	R V-Twin Sport	2011	2011	011	011		011	
GV	650	V-Twin Cruiser	2011	2011	011	011		011	
		AUSA QUADS							
M	50	Task (Side x Side)			152	152		152	
		BAJAJ							
	125	Discover (Disc Model)	2014	2016	332				
	125	Discover S (Disc Brake)	2014	2016	031				
	125	Discover ST	2013	2015	031				
	135	Pulsar LS	2012	2016	031				
	150	Discover S (Disc Brake)	2014	2016	031				
	150	Avenger Street (Cast wheel)	2015	2016	332				
	150	Discover F (Disc Brake)	2014	2016	031				
	150	Discover M	2014	2016	031				
	150	Pulsar	2007	2016	031				
	150	Pulsar Adventure AS	2015	2016	031				
	180	Pulsar (UG4)	2012	2016	031				
	200	Pulsar Adventure AS	2015	2016	031			023	
	200	Pulsar NS	2014	2016	031			023	
	200	Pulsar RS (inc Lower Fairing)	2015	2016	031			023	
DTS-I	220	Avenger Cruise (Spoke wheel)	2008	2014	332				
DTS-I	220	Avenger Cruise (Spoke wheel)	2015	2016	332				
	220	Avenger Street (Cast wheel)	2015	2016	332				
	220	Pulsar F	2015	2016	031			023	
	220	Pulsar S	2015	2016	031			023	
		BAOTIAN							
BT	49	QT-12 Rebel (4T)	2006	2011	136				
BT	50	QT-11 Retro (4T)	2006	2011	114				
BT	50	QT-9 Speedy (4T)	2010	2011	114				
		BAOXIN							
BX	125	L	1997	1997	099				
		BARIGO							
		Scooter electric	1997	1997	008				
		BAROSSA QUADS							
XS	125	T-13	2007	2010		174			
	170	Cheetah	2003	2006				005	
	170	Magna	2003	2005				002	
	170	Sport	2003	2004				002	
	250	Cheetah	2003	2006				005	
	250	Quarterback	2005	2005				002	
		BEELINE							
	50	Veloce	2008	2010	136				
	50	Veloce GT	2008	2010	136				
		BENELLI							
491		All rear drum models	1998	2004	098, 107				
491		Scooter (all rear disc models)	1999	2004	098, 107			098	
49X	50	Scooter	2007	2007	136				
K2	50	Scooter	1998	2001	098, 107			098	
	50	Devil	1992	1992	019			120	
	50	Spring	1993	1993	019			120	
	50	Pepe (2T) (7 spoke cast wheels)	1999	2001	098, 107				
	50	Naked	2002	2003	098, 107				
	50	Pepe LX (7 spoke cast wheels) (2T)	2003	2009	098, 107				
	50	Pepe Classic (7 spoke cast wheels) (2T)	2007	2014	098, 107				
	50	Quattro Nove X (All Rear Drum models)	2008	2009	136				
	50	Pepe (5 spoke cast wheel) (2T)	2010	2014	098, 107				
	50	Quattro Nove X (all models/rear disc model)	2010	2016	136			136	
	50	Pepe (4T) (7 spoke cast wheels)	2012	2016	098, 107				
	50	Mala (2T)	2013	2013	098, 107				

Type	ccm		from	to	FL	FR	RL	RR	P
	80	Devil	1992	1992	019			120	
K2	100		1999	2001	098, 107				
	100	Pepe LX	1999	2002	098, 107				
	100	Naked	2002	2002	098, 107				
	124	125 2C/125 2T/2CSE	1976	1976	038				
666	125	Born in Hell	1998	1999	064			038	
BN	125		2018	2020	393			311	
BXK	125		1988	1988				008	
TNT	125	Tornado Naked T (125cc)	2017	2018	393				
TRK	125		2018	2020	361				
X	125		2012	2014	334			334	
	125	T	1983	1983	038				
	125	Tamo	1989	1989	019				
	125	Velvet	1999	2007	098, 107			098, 107	
	125	Adiva	2001	2004	098, 107			186	
	125	Velvet (13" Front wheel/Touring)	2008	2012	122			150	
	125	Velvet (Touring)	2008	2012	122			302	
	125	Macis	2010	2016	334			334	
	125	Caffe Nero	2011	2016	334			334	
	125	Hobby (4T)	2013	2013	334			334	
	125	Hobby 151 (4T)	2013	2013	334			334	
	125	Aurak MY (BJ 125 10A)	2016	2017	011			023	
	125	Worx	2017	2018	393				
	125	Leoncino 125	2018	2020	361				
TNT	135	Tornado Naked T (135cc)	2017	2020	393			311	
X	150		2012	2014	334			334	
	150	Velvet	1999	2007	098, 107			098, 107	
	150	Adiva	2001	2004	098, 107			186	
	150	Velvet (13" Front wheel/Touring)	2008	2012	122			150	
	150	Velvet (Touring)	2008	2012	122			302	
	150	Macis	2010	2016	334			334	
	150	Caffe Nero	2011	2016	334			334	
	150	Uno C (Single Cyl)	2013	2013	141			038	
TNT	200	Tornado Naked T (200cc)	2017	2018	361			311	
BX	250	Motard	2003	2003	031				
BX	250	Motard	2012	2012	031			038	
BX	250	Motard	2016	2018	031			150	
	250	C/TS, 250/4	1976	1976	038				
	250	Velvet	1999	2012	122			150	
	250	Caffe Nero	2008	2014	332	334		373	
	250	Uno C (Single)	2013	2013	141			038	
	250	Leoncino	2018	2020	361				
BN	251		2014	2018	361			150	
TRK	251		2018	2020	361				
TNT	300	Tornado Naked T 300cc	2016	2018	361				
BN	302		2015	2016	361			150	
BN	302		2017	2018	361	361			
	302	R	2017	2020	361				
	302	S	2018	2020	361				
	304		1983	1983	038				
	350	Zenzero	2012	2016	334			047	
	354		1982	1982	038	038		081	
	354	Sport 2	1983	1983	038	038		038	
	400	Velvet	2003	2004	122			150	
	400	Velvet Dusk	2003	2004	122				
	400	Imperiale	2018	2018	014				
	402	S	2018	2018	361				
BX	450	Cross	2007	2012	031			023	
	500	-4	1976	1976	038	038			
	500	Leoncino	2017	2018	177				
	500	Leoncino Trail	2017	2018	177				
	500	Leoncino Trail	2018	2019	022				
	500	4T		1976				081	
TRE	502	K	2016	2016	141			152	
TRK	502		2017	2020	177				
TRK	502	X	2017	2020	106				
BX	505	Enduro	2008	2012	031			023	
BX	570	Motard	2008	2010	177			023	
BN	600	GT	2014	2015	177	177		152	
BN	600	GT (2pin / 2pad F/Caliper)	2014	2014	141	141			
BN	600	i	2014	2015	177	177		152	
BN	600	R	2014	2016	328	328		152	
BN	600	S	2014	2015	328	328		152	
BN	600	GT	2016	2017	177	177			
BN	600	i	2016	2017	177	177			
	654	Sport	1983	1983	038	038		038	
2-UE	750		2009	2010	141	141		152	
	750	SEi (6 cyl)	1975	1975	081	081			
	752	S	2018	2018	177				
TNT	899	S Tornado Naked Tre	2007	2011	141	141		152	
TNT	899	Tornado Naked Tre	2007	2016	141	141		152	
TRE-K	899		2007	2016	141	141		152	

GOLD fren

Type	ccm		from	to	FL	FR	RL	RR	P
	899	Tornado LE/Tre Novecento	2003	2005	177	177		152	
	899	Cafe Racer	2010	2012	177	177		152	
	899	Century Racer	2011	2012	177	177		152	
	900	SE1 (6cyl)	1983	1983	081	081		197	
	900	Tornado	2002	2002	141	141		152	
TNT	1130	Sport/Sport Evo	2004	2009	177	177		152	
TNT	1130	Cafe Racer	2005	2005	141	141		152	
TNT	1130	Titanium	2005	2005	141	141		152	
TNT	1130	Cafe Racer	2006	2012	177	177		152	
TNT	1130	Titanium	2006	2008	177	177		152	
TNT	1130	Tornado Naked Tre	2006	2007	141	141		152	
TNT	1130	Tornado Naked Tre TR160	2009	2012	177	177		152	
TNT	1130	Century Racer	2011	2012	177	177		152	
TNT	1130	Tornado Naked Tre R	2013	2016	258	258		152	
TRE	1130	K	2006	2017	141	141		152	
TRE	1130	Tornado (Radial Caliper)	2006	2010	177	177		152	
TRE	1130	K Amazonas	2007	2015	141	141		152	
		BETA							
REV	50		2000	2008	121			121	
RK6	50	Enduro	1997	2002	095			121	
RR	50	Enduro	1999	2005	121			121	
RR	50	Supermoto	1999	2005	121			121	
RR	50	Enduro	2004	2007	122			121	
RR	50	Enduro Alu / Motard Alu	2004	2008	122			121	
RR	50	Standard	2005	2008	122			121	
RR	50	Enduro	2008	2020	122			346	
RR	50	Motard Track (Cast wheels)	2008	2014	122			346	
RR	50	Enduro Racing	2009	2011	122			121	
RR	50	Enduro Standard	2009	2014	121			346	
RR	50	Motard (Spoke Wheels)	2009	2012	122			346	
RR	50	Motard Standard	2009	2012	121			346	
RR	50	Motard Skull	2011	2011	122			346	
RR	50	Enduro Factory	2012	2020	122			346	
RR	50	Motard Standard (Cast wheel 5 spoke)	2013	2014	122			346	
RR	50	Motard Sport (Cast wheel 5 spoke)	2014	2020	122			346	
RR	50	Motard Track/Racing (Spoke Wheels)	2014	2020	122			346	
RR	50	Track (Spoke wheel)	2014	2014	122			346	
	50	Tempo (16" wheels)	1994	1997	115				
	50	Ark (A/C Models)	1996	2014	098, 107				
	50	Ark (LC Models)	1997	2014	098, 107			098, 107	
	50	Quadra	1997	2002	098, 107				
	50	Tempo	1998	2002	098, 107				
	50	Eikon	1999	2006	121			121	
	50	Minitrial (A/C)	2009	2012	173				
	70	Minitrial (2T)	2013	2014	121			121	
EVO	80	Junior	2009	2020	121			121	
EVO	80	Senior	2009	2020	168, 198			228	
REV	80		2000	2007	121			121	
REV	80		2008	2008	168, 198			228	
ALP	125	(4T)	1998	2004	121			121	
ALP	125	(4T)	2005	2015	122			346	
EVO	125	(2T)	2009	2015	168, 198			282	
R	125	4T Mini Cross			114			121	
RE	125	(4T) Enduro	2009	2010	122				
RE	125	4T Enduro	2010	2014	121				
REV3	125		2000	2006	168, 198			168, 198	
REV3	125		2006	2008	168, 198			228	
RR	125	4T Motard (A/C Spoke Wheel)	2008	2014	122			346	
RR	125	4T Enduro (A/C]	2009	2014	122			346	
RR	125	4T Enduro (LC)	2011	2018	122			346	
RR	125	Motard 4T (LC) (Cast wheels)	2011	2018	122			346	
RR	125	(2T) Inc MY20	2018	2020	041			346	
RR	125	Enduro LC (2T) MY20	2020	2020	041			346	
TR32	125		1986	1987	120				
TR33	125		1986	1987	120				
TR34	125		1988	1988	121			115	
TR34	125		1989	1989	121			121	
	125	Eurotech	1996	1998	121			121	
	125	Techno	1996	1998	121			121	
	125	Eikon	2000	2006	038			150	
	125	Jonathan	2000	2001	064			023	
	125	Jonathan	2002	2005	064			094	
	125	Urban	2008	2015	122			346	
	125	Urban Special	2009	2015	122			346	
	125	Trial Evo (2T) MY20	2020	2020	180			282	
	150	Eikon	2000	2006	038			150	
ALP	200	(4T)	2000	2004	121			121	
ALP	200	(4T)	2005	2020	122			346	
EVO	200	(2T)	2009	2020	168, 198			282	
REV3	200		2000	2005	168, 198			168, 198	
REV3	200		2006	2008	168, 198			228	
RR	200	Enduro (2T) MY20	2020	2020	041			346	
	200	Urban	2008	2015	122			346	
	200	Urban Special	2009	2015	122			346	
	200	Trial Evo (2T) MY20	2020	2020	180			282	
TR33	240		1986	1988	120				
EVO	250	(2T)	2009	2020	168, 198			282	
EVO	250	(4T)	2009	2020	168, 198			282	
EVO	250	Factory	2009	2020	168, 198			282	
REV	250	4T	2007	2008	168, 198			228	
REV3	250		2000	2004	168, 198			168, 198	
REV3	250		2005	2008	168, 198			228	
RR	250	Enduro (4T)	2005	2007	041			346	
RR	250	Enduro (2T)	2013	2014	041			346	
RR	250	Enduro Racing (2T)	2014	2014	041			346	
RR	250	Racing (2T)	2015	2015	041			346	
RR	250	Enduro RC (2T)	2018	2020	041			346	
RR	250	Enduro (2T) MY20	2020	2020	041			346	
TR34	250		1986	1988	120			115	
	250	Eurotech	1996	1998	121			121	
	250	Techno	1996	1998	121			121	
	250	Trial Evo (2T) MY20 Inc GB	2020	2020	180			282	
TR34	260		1989	1991	120			180	
	260	Synt	1992	1992	121			180	
	260	Zero	1992	1992	121			180	
	260	Synt	1993	1995	121			066	
	260	Super Trial ST	1994	1994	121			180	
	260	Techno	1995	1995	121			066	
REV3	270		2000	2004	168, 198			168, 198	
REV3	270		2005	2008	168, 198			228	
EVO	300	(2T)	2009	2020	168, 198			282	
EVO	300	(4T)	2009	2020	168, 198			282	
RR	300	Enduro (2T)	2013	2014	041			346	
RR	300	Enduro Racing (2T)	2013	2014	041			346	
RR	300	Racing (2T)	2015	2015	041			346	
RR	300	Enduro (2T)	2018	2020	041			346	
RR	300	Enduro (2T) RC	2018	2020	041			346	
RR	300	Enduro (2T) MY20	2020	2020	041			346	
	300	X-Trainer (2T)	2015	2020	041			346	
	300	Trial Evo (2T) MY20 Inc GB and SS	2020	2020	180			282	
ALP	350	4.0 (4T / 349cc)	2005	2015	122			346	
RR	350	Enduro (4T)	2011	2014	041			346	
RR	350	Enduro	2012	2012	041			346	
RR	350	Enduro	2013	2014	041			346	
RR	350	Enduro Racing (4T)	2013	2020	041			346	
RR	350	EFi (4T)	2015	2015	041			346	
RR	350	Enduro (4T) Racing	2015	2020	041			346	
RR	350	Racing (4T)	2015	2015	041			346	
RR	350	(4T) MY20	2020	2020	041			346	
	350	Euro	2000	2001	019			023	
	350	Euro	2002	2002	019			094	
	350	Euro	2003	2006	064			018	
	350	Jonathan	2003	2006	064			018	
RR	390	(4T)	2015	2020	041			346	
RR	390	Enduro (4T) MY20	2020	2020	041			346	
RR	400	4T Enduro	2005	2011	041			346	
RR	400	Enduro (4T)	2012	2014	041			346	
RR	430	(4T)	2015	2015	041			346	
RR	430	Enduro (4T) MY20	2020	2020	041			346	
RR	450	Enduro (4T)	2005	2011	041			346	
RR	450	Cross Country (4T)	2012	2012	041			346	
RR	450	Enduro (4T)	2012	2014	041			346	
RR	450	Enduro Racing (4T)	2013	2020	041			346	
RR	480	(4T)	2015	2020	041			346	
RR	480	Racing (4T)	2015	2020	041			346	
RR	480	Enduro (4T) MY20	2020	2020	041			346	
RR	490	Enduro Racing (4T)	2013	2014	041			346	
RR	498	Enduro (4T)	2012	2012	041			346	
RR	498	Enduro (4T)	2013	2014	041			346	
RR	498	Enduro Racing (4T)	2013	2014	041			346	
RR	520	Enduro 4T	2010	2011	041			346	
RR	525	Enduro (4T)	2005	2009	041			346	
RK6			1993	1996	095			115	
		Gara	1993	1995	121			066	
		Minicross Pro Race 12/10	2004	2006	173			173	
		Minitrial E	2014	2014	187			187	
		Minitrial LC (Hydraulic Brakes)	2013	2015	173				
		Tempo	1998	1998	115				
		BETTER							
BT	125	- 20	2006	2009	344				

Type	ccm		from	to	FL	FR	RL	RR	P
DB6	992	Delirio (Ducati engine)	2007	2007	177	177		152	
SB8K	992	Santamonica (Suzuki engine)	2007	2007	177	177		038	
	992	Tesi 2D	2004	2006	064	064		038	
SB8K	996	Gobert (Suzuki engine)	2006	2006	141	141		038	
DB10	1078	Motard	2012	2013	177	177		038	
DB5	1078	Desiderio	2012	2014	177	177		152	
DB5R	1078	R	2008	2009	177	177		038	
DB5R	1078	S	2008	2009	177	177		038	
DB6	1078		2008	2009	177	177		038	
DB6	1078	R	2008	2009	177	177		038	
DB6	1078	Delirio	2012	2013	177	177		038	
DB8	1078	SP	2012	2013	258	258		038	
	1078	Tesi 3D	2009	2013				038	
DB7	1098		2008	2008	177	177		152	
DB7	1099		2009	2009	258	258		038	
DB6	1100		2008	2008	177	177		152	
DB6R	1100	Delirio	2008	2008	177	177		152	
DBX	1100	(MX)	2012	2014	106	106			
DB8	1198		2010	2014	258	258		152	
DB9	1198	Brivido S (with BCA 6 piston caliper)	2012	2014	177	177		152	
DB11	1200	VLX	2012	2014	258	258		152	
DB12B	1200	Tourist	2012	2013	177	177		152	
DB9	1200	Brivido	2012	2014	177	177		152	
DB5		(All Models)	2006	2007	177	177		152	
DB5R			2006	2006	177	177		152	
		All Early Models		1983	081	081		081	
		All Models	1989	2003				038	
		Delirio	2006	2006	177	177		152	
		Later Models	1998	1999	141				
		Various Models	1989	2003	064				
		BLANEY (QUADS)							
XC	125	Trojan	2003	2004				047	
XL	200	Trooper	2003	2004				009	
		BLATA							
	125	Enduro	2007	2008	233			121	
	125	Motard	2007	2008	233			121	
		BMW							
C		Evolution (Scooter)	2014	2018	022			014	303
C		Evolution Electric	2018	2020	022	022		014	
HP4			2013	2014	258	258		023	
HP4		Carbon	2013	2014	258	258		023	
HP4		Race	2019	2020	258	258		023	
R		LS (Brembo Caliper)	1981	1985	081	081			
C1	125		1999	2003	106			023	
C1	200		2001	2003	106			023	
G	310	GS	2017	2020	305			023	
G	310	R	2017	2020	305			023	
C	400	GT	2018	2020	305			023	
C	400	X	2018	2020	305			023	
G	450	X	2008	2011	031			191	
R45	450	/45N (Single rotor with ATE Caliper)	1978	1985	166				
R45	450	/45N (Single rotor with Brembo Caliper)	1978	1985	081				
R45	450	/45N (Twin rotor with ATE caliper)	1978	1985	166	166			
R45	450	/45N (Twin Rotor with Brembo caliper)	1978	1985	081	081			
R45	450	T	1980	1985	166				
C	600	Sport Scooter	2012	2015	022	022		014	303
C	600	Sport Highline	2013	2015	022	022		014	303
C	600	Sport Evolution Scooter	2014	2020	022	022		014	303
C	650	GT Scooter	2012	2018	022	022		014	303
C	650	GT Highline	2013	2018	022	022		014	303
C	650	Sport Scooter	2016	2020	022	022		014	303
F	650	(E169/0161) Standard	1993	1996	106			023	
F	650	(E169/0162) (Funduro/High Screen / 19" Front Wheel)	1997	2000	106			023	
F	650	ST (E169/0163/168) Strada (18" Front Wheel / Low Screen)	1997	2000	106			023	
F	650	GS (R13/0172/0182) (19" Front Wheel)	1999	2003	106			023	
F	650	GS Dakar (R13/0173/0183) (21" Front Wheel)	1999	2003	106			023	
F	650	CS Scarver (K14/0174/0184 - Belt Drive / 17" Cast Wheels)	2000	2003	106			023	
F	650	CS Scarver (K14/0177/0187 - Belt Driver / 17" Cast Wheels)	2004	2007	106			023	
F	650	GS (R13/0175/0185) Single Cylinder	2004	2007	106			023	
F	650	GS Dakar (R13/0176/0186) (21" Front Wheel)	2004	2007	106			023	
F	650	GS (K72/0218/0228) (798cc Twin Cylinder/Cast Wheels)	2007	2012	106			023	
F	650	GS (30 Years GS) (Twin Cylinder 798cc/ Cast wheel)	2011	2011	106			023	
G	650	XCountry	2007	2009	106			023	
G	650	XChallenge	2007	2009	106			023	
G	650	XMoto (Cast Wheel)	2007	2009	141			023	
G	650	GS (R131) (Single Cylinder / Chain Drive)	2009	2015	106			023	
G	650	GS Sertao (Spoke Wheels)	2012	2014	106			023	
R65	650	T (ATE Caliper)	1980	1985	166	166			
R65	650	T (Brembo Caliper)	1980	1985	081				
R65	650	LS (ATE Caliper)	1981	1985	166	166			
R65	650	LS (Brembo Caliper)	1981	1985	081	081			
R65	650	RT	1985	1988	081	081			

Type	ccm		from	to	FL	FR	RL	RR	P
R65	650	GS	1987	1992	081				
R65	650	(Double rotor model)	1988	1989	081	018			
R65	650	(Single rotor)	1988	1989	197	197			
F	700	GS	2013	2018	106	106		023	
F	750	GS	2016	2020	031	031		023	
K75	750	/75-2 (Non ABS)	1984	1990	081	081			
K75	750	/75-S (Non ABS)	1984	1988	081	081			
K75	750	C	1985	1988	081	081			
K75	750	S (ABS Model)	1985	1988	081	081		081	
K75	750	S (Non ABS)	1985	1988	081	081		081	
K75	750	/75-2 (Non ABS)	1988	1996	072	072			
K75	750	C	1988	1990	072	072			
K75	750	S (ABS Model)	1988	1995	072	072		081	
K75	750	S (Non ABS)	1988	1995	072	072		081	
K75	750	RT (ABS Model)	1989	1996	072	072		081	
K75	750	RT (Non ABS)	1989	1996	072	072		081	
K75	750	/75-S (ABS Model)	1990	1996	072	072		081	
F	800	S (Half Fairing)	2006	2017	141	141		023	
F	800	ST (Full Fairing)	2006	2012	141	141		023	
F	800	GS	2008	2018	106	106		023	
F	800	R	2009	2014	141	141		292	
F	800	R Chris Pfeifer Edition	2009	2011	141	141		023	
F	800	ST Touring	2010	2017	141	141		023	
F	800	GS (30 Years GS)	2011	2011	106	106		023	
F	800	GS Adventure	2012	2018	106	106		023	
F	800	GS Triple Black	2012	2012	106	106		023	
F	800	GS Trophy	2012	2018	106	106		023	
F	800	GT	2013	2020	141	141		023	
F	800	R	2015	2020	328	328		023	
F	800	R Sport	2015	2015	328	328		023	
R80	800	GS	1980	1987	081				
R80	800	TIC	1980	1985	081	081			
R80	800	RT (Double Rotor)	1982	1984	081	081			
R80	800	ST	1982	1984	081				
R80	800	/R80 RT (Double Rotor)	1984	1988	081	081			
R80	800	/R80 RT (Single Rotor)	1984	1990	197	197			
R80	800	GS	1987	1995	197				
R80	800	/R80 RT (Double Rotor)	1988	1995	072	072			
R80	800	/R80 RT (Single Rotor)	1990	1995	197				
R80	800	PD/CH	1990	1995	197				
R80	800	R	1991	1994	117	117			
R80	800	Mystic	1994	1995	117	117			
F	850	GS	2016	2020	031			023	
F	850	GS Adventure	2016	2020	031			023	
R	850	R (Cast Wheel/ABS)	1994	2002	117	117		292	
R	850	R (Spoke Wheel)	1994	1996	197	197		292	
R	850	C (Spoke Wheel/ABS)	1996	2000	117	117		292	
R	850	GS	1996	1996	197	197			
R	850	GS (Std & ABS Models)	1996	2000	117	117		292	
R	850	RT (Cast Wheel/ABS)	1996	2001	117	117		292	
R	850	RT (Spoke Wheel)	1996	2001	117	117		292	
R	850	C (Cast Wheel/ABS)	1997	2000	117	117		292	
R	850	R	2004	2006	194	194		292	
R	850	RT	2006	2006	196	196		292	
F	900	R	2020	2020	328	328		023	
F	900	XR	2020	2020	328	328		023	
K1	1000	(16 Valve - ABS)	1988	1993	117	117		081	
K1	1000	(16 Valve - Non ABS)	1989	1993	117	117		081	
K100	1000	(Non ABS - 8 Valve Model)	1982	1988	081	081		081	
K100	1000	RS (ABS Model - 8 Valve)	1983	1988	081	081		081	
K100	1000	RS (Non ABS - 8 Valve)	1983	1988	081	081		081	
K100	1000	RT (ABS - 8 Valve)	1983	1988	081	081		081	
K100	1000	RT (Non ABS - 8 Valve)	1983	1988	081	081		081	
K100	1000	LT (ABS - 8 Valve Model)	1986	1988	081	081		081	
K100	1000	LT (Non ABS - 8 Valve Model)	1986	1988	081	081		081	
K100	1000	/2 (ABS - 8 Valve Model)	1987	1988	081	081		081	
K100	1000	/2 (Non ABS - 8 Valve Model)	1987	1988	081	081		081	
K100	1000	/2 (ABS - 8 Valve Model)	1988	1990	072	072		081	
K100	1000	LT (Non ABS - 8 Valve Model)	1988	1991	072	072		081	
K100	1000	RS (ABS Model - 8 Valve)	1988	1989	072	072		081	
K100	1000	RS (Non ABS - 8 Valve)	1988	1989	072	072		081	
K100	1000	RT (ABS - 8 Valve)	1988	1989	072	072		081	
K100	1000	RT (Non ABS - 8 Valve)	1988	1989	072	072		081	
K100	1000	LT (ABS - 8 Valve Model)	1989	1989	072	072		081	
K100	1000	RS (16 Valve - ABS Models)	1989	1992	117	117		081	
K100	1000	RS (16 Valve - Non ABS)	1989	1992	117	117		081	
K100	1000	/2 (Non ABS - 8 Valve Model)	1998	1990	072	072		081	
R100	1000	/7T (Cast Wheel)	1980	1984	081	081			
R100	1000	/7T (Spoke Wheel)	1980	1984	081	081			
R100	1000	RS	1980	1984	081	081			

Type	ccm		from	to	FL	FR	RL	RR	P
R100	1000	RT (BMW247/A339/0)	1980	1984	081	081			
R100	1000	GS	1986	1994	197				
R100	1000	RS (A339/2)	1986	1988	081	081			
R100	1000	RT	1987	1988	081	081			
R100	1000	RS (A339/3)	1988	1992	072	072			
R100	1000	RT	1988	1995	072	072			
R100	1000	PD	1989	1996	197				
R100	1000	R	1991	1995	117	117			
R100	1000	Mystic	1993	1996	117	117			
S	1000	R/RR (Models Fitted with Forged Race Wheels - 7 Spoke Type)	2010	2018	304	304		023	
S	1000	RR (K46) (Disc Has fixed bobbins)	2010	2018	304	304		023	
S	1000	R Naked (K47)	2014	2018	304	304		023	
S	1000	XR (Disc has fixed bobbins)	2015	2018	328	328		292	
S	1000	R	2018	2020	397	397		023	
S	1000	RR	2018	2020	397	397		023	
S	1000	RR M Sport	2018	2020	397	397		023	
S	1000	RR Sport	2018	2020	397	397		023	
S	1000	XR	2019	2020	397	397		292	
K	1100	LT (ABS Model)	1989	1999	117	117		081	
K	1100	LT (Non ABS)	1989	1999	117	117		081	
K	1100	RS (ABS Model)	1992	1996	117	117		081	
K	1100	RS (Non ABS Model)	1992	1996	117	117		081	
KL	1100	LT	1989	1999	117	117		081	
R	1100	RS	1992	2001	117	117		081	
R	1100	GS (STD & ABS)	1993	1999	117	117		292	
R	1100	R (Cast Wheel)	1993	2001	117	117		292	
R	1100	R (Spoke Wheel)	1993	1996	117	117		292	
R	1100	RT (Cast Wheel/ABS)	1994	2001	117	117		292	
R	1100	RT (Spoke Wheel)	1994	2001	117	117		292	
R	1100	S (ABS)	1996	2000	117	117		292	
R	1100	S (ABS)	2000	2006	194	194		292	
R	1100	S (Non ABS)	2000	2003	196	196		292	
R	1150	GS (R21/0415/0495)	1998	2001	117	117		292	
R	1150	RT (Integral ABS)	2000	2006	196	196		292	
R	1150	GS (EVO - R21/0415/0495)	2001	2003	194	194		292	
R	1150	GS Adventure (Evo R21A 0441/0492)	2001	2006	194	194		292	
R	1150	R	2001	2006	194	194		292	
R	1150	RS (Integral ABS)	2001	2004	194	194		292	
R	1150	R Rockster (R21//E1/00041)	2003	2006	194	194		292	
R	1150	R Rockster Edition 80	2004	2004	194	194		292	
R	1170	Nine T (K21)	2014	2020	328	328		292	
R	1170	Nine T Café Racer (K32)	2016	2020	141	141		292	
R	1170	Nine T Pure (K22)	2016	2020	141	141		292	
R	1170	Nine T Scrambler (K21)	2016	2020	141	141		292	
R	1170	Nine T Urban GS (K33)	2017	2018	141	141		292	
HP2	1200	Enduro	2005	2009	106			292	
HP2	1200	Megamoto (K25)	2007	2010	196	196		292	
HP2	1200	Sport (K29)	2008	2011	258	258		292	
K	1200	RS (Non ABS & ABS Models)	1996	2000	117	117		081	
K	1200	LT (Integral ABS & STD ABS Models)	1997	2000	117	117		195	
K	1200	LT (Evo-Integral ABS/Disc Has Loose Bobbins)	2000	2007	194	194		195	
K	1200	RS (With & Without Integral ABS)	2001	2004	196	196		081	
K	1200	GT (K41) (2 pin rear pad) Disc Has loose bobbins	2003	2006	196	196		081	
K	1200	R (K27/0378/Tokico caliper)	2005	2010	194	194		292	
K	1200	R (Urban)	2005	2008	194	194			
K	1200	S (K40)	2005	2008	196	196			
K	1200	GT (K44) Disc Has fixed bobbins	2006	2008	196	196			
K	1200	R Sport	2007	2007	194	194			
K	1200	LT (Evo integral ABS/Disc Has fixed bobbins)	2008	2009	194	194		195	
R	1200	C (Cast Wheel/ABS)	1996	2002	117	117		292	
R	1200	C (Spoke Wheel/ABS)	1996	2002	117	117		292	
R	1200	(Independence/Cast Wheel)	2000	2002	117	117		292	
R	1200	(Independence/Spoke Wheel)	2000	2002	117	117		292	
R	1200	CL	2002	2004	194	194		195	
R	1200	GS (K25/0307/Cast/Spoke wheel)	2002	2007	196	196		292	
R	1200	C Classic	2003	2004	194	194		292	
R	1200	C Independent (Cast wheel)	2003	2004	194	194		292	
R	1200	ST K28/0328	2003	2008	196	196		292	
R	1200	C Montauk	2004	2004	194	194		292	
R	1200	GS	2004	2007	196	196		292	
R	1200	GS Adventure (K25/0382/Spoke Wheel)	2005	2007	196	196		292	
R	1200	RT (K26/0368/Brembo caliper)	2005	2009	196	196		292	
R	1200	GS Adventure / M (K25/0380/Spoke wheel)	2006	2009	196	196		292	
R	1200	GS/M (K25/0303/Cast wheel)	2006	2009	196	196		292	
R	1200	S (K29/0366/Brembo caliper)	2006	2008	196	196		292	
R	1200	R (K27/0378)	2007	2013	194	194		292	
R	1200	GS (Cast wheel)	2010	2011	196	196		292	
R	1200	GS Adventure (Spoke wheel)	2010	2013	196	196		292	
R	1200	R SE	2010	2011	194	194		292	
R	1200	RT (Disc has fixed bobbins)	2010	2013	196	196		292	
R	1200	RT SE (Disc has fixed bobbins)	2010	2013	196	196		292	
R	1200	GS (30 years GS)	2011	2011	196	196		292	

Type	ccm		from	to	FL	FR	RL	RR	P
R	1200	GS Adventure (30 years GS)	2011	2011	196	196		292	
R	1200	GS Triple Black (Spoke wheel)	2011	2013	196	196		292	
R	1200	R Classic	2011	2014	194	194		292	
R	1200	GS Adventure Triple Black	2012	2012	196	196		292	
R	1200	GS Rallye (Spoke wheel)	2012	2012	196	196		292	
R	1200	GS (K50) (Liquid Cooled/radial mount caliper)	2013	2018	328	328		106	
R	1200	GS Adventure (inc TE/XE models/ K51/LC)	2014	2018	328	328		106	
R	1200	RT (K52 Radial F-Caliper / LC)	2014	2018	328	328		106	
R	1200	R (Disc has fixed bobbins)	2015	2018	328	328		106	
R	1200	R Sport (Disc has fixed bobbins)	2015	2018	328	328		106	
R	1200	RS (Disc has fixed bobbins)	2015	2018	328	328		106	
R	1200	RS Sport (Disc has fixed bobbins)	2015	2018	328	328		106	
R	1250	GS (Disc has fixed bobbins)	2019	2020	397	397		106	
R	1250	GS Exclusive TE (Disc has fixed bobbins)	2019	2020	397	397		106	
R	1250	GS Rallye (Disc has fixed bobbins)	2019	2020	397	397		106	
R	1250	GS Rallye TE (Disc has fixed bobbins)	2019	2020	397	397		106	
R	1250	GS TE (Disc has fixed bobbins)	2019	2020	397	397		106	
R	1250	RT (Disc has fixed bobbins)	2019	2020	397	397		106	
R	1250	RT LE (Disc has fixed bobbins)	2019	2020	397	397		106	
R	1250	RT SE (Disc has fixed bobbins)	2019	2020	397	397		106	
K	1300	GT (Disc has fixed bobbins)	2009	2011	196	196		292	
K	1300	R (Disc has fixed bobins)	2009	2012	194	194		292	
K	1300	S (Fixed bobbins - Non & ABS Models)	2009	2015	196	196		292	
K	1300	GT SE (Disc has fixed bobbins)	2010	2011	196	196		292	
K	1300	R Dynamic (Disc has fixed bobbins)	2011	2015	194	194		292	
K	1300	R Carbon (Disc has fixed bobbins)	2012	2012	194	194		292	
K	1300	S HP (Fixed bobbins - Non & ABS Models)	2012	2012	196	196		292	
K	1300	S Sport (Fixed bobbins - Non & ABS models)	2012	2015	196	196		292	
K	1600	GT (Disc has fixed bobbins)	2011	2020	318	318		106	
K	1600	GTL (Disc has fixed bobbins)	2011	2020	318	318		106	
K	1600	GTSE (Disc has fixed bobbins)	2012	2015	318	318		106	
K	1600	GTL Exclusive (Disc has fixed bobbins)	2013	2016	318	318		106	
K	1600	GT Sport (Disc has fixed bobbins)	2015	2015	318	318		106	
K	1600	B Bagger	2017	2020	318	318		106	
K	1600	B Grand America	2018	2020	318	318		106	
		BOMBARDIER							
	200	Rally	2003	2004	047	047			
	200	Rally	2005	2006	047	047		088	
DS	250		2006	2006	230	230		230	
	330	Outlander	2004	2004	182	205		205	
	400	Outlander (4x4)	2003	2003	182	205		205	
	500	Quest (all models)	2002	2002	182	205		205	
		Traxter (4x4)	1999	2001	152	152		152	
	500	Traxter Max	2003	2005	182	205		205	
DS	650		2000	2002	182	205		182	
	650	Outlander 4x4	2006	2006	182	205		182	
	650	Quest (all models)	2002	2002	182	205		205	
		BORILE							
B	500	CR	2002	2004	064			023	
B	500	MT	2002	2002	064			023	
		BOROSSI JOYNER							
BB	250	SR			294	294			
BB	650	SR			294	294			
BB	650	UV 4x4			294	294			
BB	800				294	294			
BB	800	UV 4x4			294	294			
BB	1100				294	294			
BB	1100	TR 4x4			294	294			
BB	1100	XR			294	294			
BB	1600	-4			294	294			
BB	1600	-2			294	294			
BB	2000				294	294			
		BRAMMO							
		Empulse R	2012	2013	141			152	
		Enertia	2012	2013	106			152	
BS	50	Cuba	2008	2008	136				
BS	50	Sting	2008	2008	136				
BM	125		2008	2008	289				
BM	125	Retro	2008	2008	289				
BM	125	Sport	2008	2008	289				
BS	125	Boolevard	2008	2008	110				
BS	125	Snooker	2008	2008	110				
		BREMBO RACING CALIPERS							
		120A44110 P2/34 Supersport Rear Caliper			152				
		122A99021 P2 24 Off Road Caliper			031				
		20 4756 52/62 - 4 Piston P4 30/34 @ 40mm Spacing (Single pin pad fixing)			064				
		20 5161 43 or 81 - 2 Piston P 2/32 Rear Caliper (Single pad fixing pin / With anti rattle shim)						038	
		20 5165 55/68 Goldline 4 Piston P4 30/34 @ 40mm Spacing (Single pin pad fixing)			064				

Type	ccm		from	to	FL	FR	RL	RR	P
		20 6800 10/20 - Goldline 4 Piston P4 30/34 @ 65 mm Spacing (Two Pin Pad Fixing)			141				
		20 6950 51 - 2 Piston P2/32 Rearv Caliper (Single Pad Fixing Pin / With Wire Clip)						152	
		20 6951 12/50/63 - P2/34 Rear Caliper (Single pad fixing pin /with wire clip)						152	
		20 7850 11/21 - 4 Piston P4/34 @ 65mm Spacing (Wire clip pad retention only)			177				
		20 8343 11/21 or 35/45 - 4 Piston P4/34 @ 100mm Spacing (Wire clip pad retention only)			177				
		20 9883 Radial monobloc 100mm centres			258				
		220A16810 P4 30/34 2 pin Pad Fixing 100mm Radial mount			141				
		220A16820 P30/34 Yamaha R1 Radial Mount	2007	2010	141				
		220A80210 P4 30/34 2 Pin Pad Fixing 108mm Radial Mount			141				
		220A80310 P4 30/34 2 Pin Pad Fixing 100mm Radial Mount			141				
		220B01010 Radial CNC caliper @ 108mm Spacing			258				
		P2 24 (X206001) Rear caliper						175	
		P2 30 (XA1J040) Rear CNC caliper						203	
		P2 34 (X988870) Rear CNC caliper						203	
		P4 24 (X206101) Rear caliper						203	
		P4 24 (X206121) Rear CNC caliper						203	
		P4 26/28 (XA1K480)			259				
		P4/34 (220 988 530) 100mm Radial Monobloc caliper			258				
		P4/34 (220A39710) 108 mm Radial Monobloc caliper			258				
		X00.C04 60/61 - 4 Piston P 34/34 Radial Mount Caliper @ 108mm spacing (4 Pad Set)			239				
		X1017.40/41 - 4 Piston / 40mm Axial Monobloc			116				
		X99C4 60/61 P4/34 Radial monobloc 4 pad 108mm spacing			239				
		XA 32950 P4/34 Motard Avial Mount 65mm 4 pad set			177				
		XA07680 - Piston P2 34 Radial Mount (Note only sold as set o 4 pads)			239				
		XA3.B8.30/31 - 4 Piston P32/36 Radial Mount Caliper @ 108mm Spacing (Titanium Pistons)			116				
		XA3.B8.60/61 - 4 Piston P32/36 Radial Mount Caliper @ 108mm Spacing (Aluminium Pistons)			116				
		XA69510 P4 30/34 Motard Radial 108mm Mount 2 pad fixing			141				
		XA7G2.10/11 P4 32/36 Radial Monobloc 100mm Spacing			116				
		XA7G2.40/41 - 4 Piston 100mm CNC Monobloc Race Caliper			116				
		XQ 21361 O2/28 Off Road Caliper			031				
		XQ 21390 PF 26 Off Road Rear Caliper						191	
		XZ78910 P4 30/34 Motard radial 100mm Mount 2 pin Fixing			141				
		BS VILLA							
AX	50		1993	1993	114				
GZ	50		1993	1993	114				
ZX	50		1993	1993	161				
		BSM							
TB	100				047				
TB	125				047			047	
		BUELL							
	500	Blast	2000	2007	014			020	
XB9R	984	Firebolt	2002	2007	270			020	
XB9S	984	Lightning	2003	2004	270			020	
XB9SX	984	Lightning	2008	2010	270			020	
XB9SX	984	Lightning City X	2005	2009	270			020	
	1125	CR	2009	2010	269			290	
	1125	R	2008	2010	269			290	
M2	1200	Cyclone®	1998	2005	126			020	
S1	1200	Lightning®	1998	2000	126			020	
S1	1200	White Lightning®	1998	2000	126			020	
S3	1200	Thunderbolt®	1998	2000	126			020	
S3T	1200	Thunderbolt®	1998	2000	126			020	
X1	1200	Lightning®	1998	2005	126			020	
XB 12STT	1200	Lightning	2008	2008	270			020	
XB 12STT	1200	Super TT	2007	2010	270				
XB12	1200	SCG Lightning	2006	2008	270			020	
XB12 SCG	1200	Lightning	2006	2008	270				
XB12R	1200	Firebolt	2004	2008	270			020	
XB12R	1200	Firebolt	2009	2010	269			020	
XB12S	1200	Lightning	2004	2008	270			020	
XB12SCG	1200	Lightning	2009	2010	269			020	
XB12SS	1200	Lightning Long	2006	2008	270			020	
XB12SS	1200	Lightning Long	2009	2010	269			020	
XB12X	1200	Ulysses	2006	2010	270			020	
XT12XT	1200	Ulysses	2008	2010	270			020	
		BULTACO							
SM	50	Astro			095			121	
	50	Lobito	1999	1999	095			121	

Type	ccm		from	to	FL	FR	RL	RR	P
		CAGIVA							
W4	50		1991	1995	038			096	
	50	Blues	1993	1995	066			118	
	50	City	1992	1994	110				
	50	Cucciolo	1997	1997	038				
	50	Mito	1999	2000				121	
	50	Nag Scooter	2008	2008	136				
	50	Nuvola	2000	2000	098, 107				
	50	Prima	1992	1994	066			118	
	50	Progress	1997	1999	121				
	50	Stella	1997	1997	174			174	
	50	Super City	1993	1995	066				
	80	Super City	1993	1995	066			118	
N1	125		1997	1997	064				
SXT	125		2002	2002	096				
W8	125		1993	1995				096	
W8	125		1996	1998	089			096	
WM	125		1987	1988	006				
WMX	125		1986	1986	038				
WMX	125		1989	1989	006			005	
WSTX	125	Aletta Rossa	1983	1984	096				
XSST	125		1981	1982	096				
	125	Blues	1992	1995	010			038	
	125	Brillio	2008	2008	011				
	125	Cruiser	1987	1987	006			096	
	125	Cucciolo	2000	2000	038				
	125	Elefant	1988	1990	089			096	
	125	Elefant RE	1987	1987	038				
	125	Freccia SY	1989	1989	089			038	
	125	Mito	1991	1992	089			038	
	125	Mito	1993	2010	064			038	
	125	Nuvola	2000	2000	098, 107				
	125	Passing	1993	1997	174				
	125	Planet (3 Spoke Wheels)	1998	2003	064			038	
	125	Planet (6 Spoke Wheels 2nd Series)	1998	2003	064			038	
	125	Planet (6 Spoke Wheels/1ST Series)	1998	2003	064			038	
	125	Raptor	2003	2010	064			038	
	125	Roadster	1998	1999	010				
	125	Supercity	1992	1992	089			038	
	125	Tamanaco	1988	1989	089			096	
SST	250		1980	1982	038				
SX	250		1982	1982	038				
WMX	250		1985	1985	038				
WMX	250		1986	1989	006				
WMX	250		1989	1989				005	
SST	350		1980	1982	038				
W12	350		1992	1995	089			094	
T4	500	E	1987	1987	038				
WMX	500		1985	1986	038				
	500	Canyon	1996	2000	024			088	
	500	Mito	1991	1992				038	
	500	Mito	2007	2007	064	064			
	500	Mito (4T)	2008	2008	177	177		038	
	501	Excaliber RLX	1992	1992	006				
	501	Excaliber RX	1992	1992				038	
W16	600		1994	1998	089			094	
	600	Canyon E	1996	1999	024			088	
	600	River	1995	1999	064			038	
	650	Elefant	1985	1985	101			038	
	650	Elefant	1988	1989	101			038	
	650	Raptor	2000	2007	141	141		152	
	650	V-Raptor	2000	2007	141	141		152	
E	750	Elefant	1993	1995	024			031	
	750	Elefant	1990	1992	006			089	
E	900	C Elefant (282mm Front Discs / USD Forks / Brembo Front/Rear Calipers)	1993	1997	031	031		031	
E	900	C ie Lucky Explorer	1995	1997	031	031		031	
E	900	Elefant Dakar Rep (300mm Front Disc)	1990	1990	024			088	
E	900	Elefant ie GT (296 Front Disc)	1991	1992	024			088	
E	900	ie Lucky Explorer (296mm Front Disc)	1990	1990	024			088	
IE	900	Canyon / Gran Canyon	1998	2000	022	022		088	
	1000	Navigator	2000	2005	022	022		088	
	1000	Raptor	2000	2005	141	141		152	
	1000	Raptor X3	2003	2004	177	177			
	1000	V-Raptor	2000	2005	141	141		152	
		CAN-AM							
		Commander Electric 9KW	2015	2015	291	291			
		Outlander 6x6 inc Max and T3	2019	2019	309	310	309	310	
		Spyder F3 (SE6/SM6)	2015	2019	328	328		335	
		Spyder F3 LTD	2016	2019	328	328		335	
		Spyder F3-S (SE6/SM6)	2015	2019	328	328		335	
		Spyder F3-S (Special Series)	2016	2016	328	328		335	
		Spyder F3-T	2016	2019	328	328		335	
		Spyder RS (Brembo Calipers)	2013	2016	328	328		335	
		Spyder RS-S (Brembo Calipers)	2013	2016	328	328		335	

Type	ccm		from	to	FL	FR	RL	RR	P
		Spyder RT (3 cyl eng/6 speed)	2013	2017	328	328		335	
		Spyder RT LTD (3 cyl eng/6 speed)	2013	2019	328	328		335	
		Spyder RT-S (3 Cyl Eng/6 Speed)	2013	2015	328	328		335	
		Spyder RT-S (Special Series)	2016	2017	328	328		335	
		Spyder ST (Brembo calipers)	2013	2016	328	328		335	
		Spyder ST LTD (Brembo calipers)	2013	2015	328	328		335	
		Spyder ST-S (Brembo calipers)	2013	2016	328	328		335	
DS	90	X (4T)	2008	2015	047	047		047	
	200	ASE	1986	1986	038				
	200	Rally (4A7A/B/C/D/E/F)	2007	2007	047	047		182	
DS	250	(3J7A/B/C)	2007	2019	230	230		230	
	250	ASE	1986	1986	038				
	250	MX LC	1986	1986	038				
	350	ASE	1986	1986	038				
	400	Outlander (4x4 STD) (2D7A/B/C/D/E/F/G/H)	2007	2014	182	205		182	
	400	Outlander (XT 4x4) (2E7A/B/C/D/E/F)	2007	2014	182	205		182	
	400	Outlander EFi, STD (International only)	2015	2015	182	205		182	
	400	Outlander Max (XT 4x4)(2G7A/B/C/D/E)	2007	2013	182	205		182	
	406	ASE	1987	1987	038				
DS	450	(2x4/EFi)	2008	2015	291	291		315	
DS	450	X (2x4/EFi)	2008	2009	291	291		315	
DS	450	XXC/XXM	2010	2015	291	291		315	
	450	Outlander EFI, inc MAX and T3	2018	2019	309	310	309	310	
	500	ASE	1986	1986	038				
	500	Defender HD5	2017	2019	378	376		376	
	500	MX	1986	1986	038				
	500	Outlander (STD 4x4) (2T7A/B/C/D)	2007	2012	182	205		182	
	500	Outlander (XT 4x4)(2U7A/B/C/D)	2007	2012	182	205		182	
	500	Outlander 4x4 (DPS)	2013	2014	309	310		310	
	500	Outlander 4x4 (XT)	2013	2014	309	310	309	310	
	500	Outlander L EFI STD inc Max	2013	2015	309	310	309	310	
	500	Outlander Max (STD 4x4)(2W7A/B/C)	2007	2012	182	205		182	
	500	Outlander Max (XT 4x4)(2X7A/B/C)	2007	2010	182	205		182	
	500	Outlander Max 4x4 (DPS)	2013	2014	309	310		310	
	500	Outlander Max EFI (XT)	2013	2015	309	310		310	
	500	Renegade (4x4/EFI)	2007	2015	182	205		182	
	500	Renegade (STD)	2012	2015	309	310		310	
	500	Spyder F3-S Daytona	2017	2017	328	328		335	
	500	Traxter HD5	2017	2019	378	376		376	
	500	Traxter T HD5	2018	2019	378	376		376	
	560	Sonic	1986	1986	038				
	570	Outlander MAX EFI T3 PRO inc DPS XT	2018	2019	309	310	309	310	
	570	Outlander MAX Pro	2017	2017	309	310		310	
	570	Outlander T3 EFI inc (3FJD)	2018	2018	309	310	309	310	
	570	Renegade EFI	2019	2019	309	310	309	310	
	600	Ryker	2018	2019	378	376	378	376	
DS	650	X (3B7A/B)	2007	2007	182	205		182	
	650	Outlander (STD 4x4)(2N7A/B/C/D/E/F/G/H)	2007	2012	182	205		182	
	650	Outlander (XT 4x4)(2P7A/B/C/D/E/F)	2007	2012	182	205		182	
	650	Outlander 4x4 (DPS/XT/STD)	2013	2015	309	310	309	310	
	650	Outlander Max (STD 4x4)(2R7A/B/C/D/E/F/G/H/J/K)	2007	2012	182	205		182	
	650	Outlander Max 4x4 (STD/DPS/AX)	2013	2014	309	310		310	
	650	Outlander MAX 6x6 EFI T3	2019	2019	309	310	309	310	
	650	Outlander MAX EFI T3 PRo inc DPS XT	2018	2019	309	310	309	310	
	650	Outlander MAX Pro	2017	2017	309	310	309	310	
	650	Outlander Max XT-P	2012	2012	182	205		182	
	650	Outlander T3 EFI inc	2018	2018	309	310	309	310	
	650	Renegade EFI T3	2019	2019	309	310	309	310	
	799	Defender	2016	2016	378	376	377	375	
	799	Defender DPS	2016	2016	378	376	377	375	
	799	Defender HD8	2017	2019	378	376	377	375	
	799	Defender Max HD8	2018	2019	378	376	377	375	
	799	Defender XT	2016	2016	378	376	377	375	
	799	Defender XT Cab	2016	2016	378	376	377	375	
	800	Renegade (4x4/EFI)	2007	2008	182	205		182	
	800	Renegade X (4x4/EFI)	2008	2008	182	205		182	
	800	Commander (XT/DPS)	2011	2015	009	002		002	
	800	Commander R STD EFI	2011	2019	009	002		002	
	800	Commander R XT	2011	2014	009	002		002	
	800	Maverick Trail R EFI	2018	2018	378	376	378	376	
	800	Outlander (STD 4x4)(2H7A/B/C/D/E/F/G/H)	2007	2008	182	205		182	
	800	Outlander (XT 4x4)(2J7A/B/C/D/E/F)	2007	2008	182	205		182	
	800	Outlander Max (LTD 4x4)(2M7A/B/C)	2007	2012	182	205		182	
	800	Outlander Max (STD 4x4)(2K7A/B/C/D/E/F/G/H/J)	2007	2012	182	205		182	
	800	Outlander Max (XT 4x4)(2L7A/B/C/D/E/F)	2007	2008	182	205		182	
	800	Outlander Max R 4x4 (DPS/XT/XT-P)	2013	2014	309	310		310	
	800	Outlander Max R EFI	2009	2012	182	205		182	
	800	Outlander Max R XT	2009	2012	182	205		182	
	800	Outlander R XT	2009	2010	182	205		182	
	800	Outlander R 4x4 (DPS)	2013	2014	309	310		310	
	800	Outlander R EFi	2009	2009	182	205		182	
	800	Outlander R Max XT-P	2012	2012	182	205		182	

Type	ccm		from	to	FL	FR	RL	RR	P
	800	Outlander R STD	2012	2015	309	310		310	
	800	Outlander R Xmr	2011	2012	182	205		182	
	800	Outlander R XT	2012	2013	309	310		310	
	800	Outlander R Xxc	2011	2011	182	205		182	
	800	Renegade R EFi	2009	2011	182	205		182	
	800	Renegade R STD	2012	2015	309	310		310	
	800	Renegade R X	2009	2010	182	205		182	
	800	Renegade R XXC	2011	2011	182	205		182	
	800	Renegade R XXC	2012	2014	309	310	309	310	
	800	Traxter HD8	2017	2019	378	376		376	
	800	Traxter T HD8	2018	2019	378	376		376	
	850	Outlander EFI	2018	2018	309	310		310	
	850	Outlander MAX	2017	2017	309	310		310	
	850	Renegade EFI	2019	2019	309	310	309	310	
	900	Ryker	2018	2019	378	376		376	
	976	Defender	2016	2016	378	376	377	375	
	976	Defender DPS	2016	2016	378	376	377	375	
	976	Defender HD10	2017	2019	378	376	377	375	
	976	Defender Max HD10 inc XMR	2018	2019	378	377	377	375	
	976	Defender XT	2016	2016	378	376	377	375	
	976	Defender XT Cab	2016	2016	378	376	377	375	
	1000	Commander (DPS)	2013	2015	009	002		002	
	1000	Commander (LTD)	2012	2015	009	002		002	
	1000	Commander (STD)	2011	2015	009	002		002	
	1000	Commander Max DPS/XT	2014	2017	345	033	309	310	
	1000	Commander R EFI	2018	2019	345	033		002	
	1000	Commander X	2011	2013	009	002		002	
	1000	Commander XT	2011	2015	009	002		002	
	1000	Commander XT-P	2014	2015	009	002		002	
	1000	Maverick X3 Turbo	2018	2018	378	376	378	376	
	1000	Maverick X3 Turbo R	2018	2018	378	376	378	376	
	1000	Maverick Max	2016	2017	345	033	182	205	
	1000	Maverick Max STD/XRS/DPS	2015	2016	345	033	182	205	
	1000	Maverick R STD	2014	2015	009	002	182	205	
	1000	Maverick R XMR	2014	2015	009	002	182	205	
	1000	Maverick R XRS	2014	2015	009	002	182	205	
	1000	Maverick R XRS/DPS	2014	2015	009	002	182	205	
	1000	Maverick R XXC	2014	2015	009	002	182	205	
	1000	Maverick Trail EFI	2018	2018	378	376	378	376	
	1000	Maverick X3	2017	2017	378	376	378	376	
	1000	Maverick X3 Max Turbo	2017	2018	378	376	378	376	
	1000	Maverick X3 Max Turbo R	2018	2018	378	376	378	376	
	1000	Outlander 4x4 (DPS/XT/XT-P/LTD/STD)	2013	2014	309	310		310	
	1000	Outlander 4x4 (LTD)	2013	2013	309	310		310	
	1000	Outlander 4x4 (XMR)	2013	2014	309	310	309	310	
	1000	Outlander 6x6 EFI T3	2018	2019	309	310	309	310	
	1000	Outlander EEFI T3 and R	2017	2019	309	310	309	310	
	1000	Outlander Max 4x4 (DPS/XT/XT-P)	2013	2013	309	310		310	
	1000	Outlander MAX EFI T3 L and R	2017	2019	309	310	309	310	
	1000	Outlander STD	2012	2014	309	310	309	310	
	1000	Outlander XT/XT-P	2012	2014	309	310	309	310	
	1000	Renegade EFI T3 and R	2019	2019	309	310	309	310	
	1000	Renegade STD	2012	2014	309	310	309	310	
	1000	Renegade XXC	2012	2014	309	310	309	310	
	1000	Traxter HD10	2017	2019	378	376		376	
	1000	Traxter Max HD10	2018	2019	378	376		376	
	1000	Traxter T HD10	2018	2019	378	376		376	
		CANNONDALE							
MX	400		2000	2003	041			001	
E	440	A, R	2003	2003	041			001	
S	440		2003	2003	064			001	
X	440		2003	2003	041			001	
	440	Blaze	2001	2004	182	205		182	
	440	Cannibal	2001	2004	182	205		182	
	440	Glamis	2001	2004	182	205		182	
	440	Moto	2002	2003	182	205		182	
	440	Speed	2001	2004	182	205		182	
		CASAL							
		All Disc Models			159				
		CCM							
R45			2007	2009	031			023	
CR	40	Cafe Racer (Handlebar Fairing)	2007	2008	064			023	
CR	40	S Cafe Racer (Full Fairing)	2007	2009	064			023	
SR	40	Street Scrambler	2007	2009	122			023	
C-XR	125	E	2008	2009	011			144	
C-XR	125	M	2007	2009	011			144	
C-XR	125	S	2008	2009	011			144	
RL	125		2008	2009	332				
SM	125		2008	2009	332			332	
TL	125		2008	2009	011			332	
C-XR	230	E	2007	2009	011			144	
C-XR	230	M	2007	2009	011			144	
C-XR	230	S	2007	2009	011			144	
XTR	250		2009	2009	011			018	
LX	350	-4A Quad	2008	2009	144	144		047	

Type	ccm		from	to	FL	FR	RL	RR	P
FT 35	400	S (DRZ 400 Motor)	2007	2009	031			023	
R35	400		2007	2009	031			023	
R35S	400		2007	2009	031			023	
DS	404	Supermoto	2007	2009	031			023	
DS	404	Trail	2007	2009	031			023	
	404	DS (260mm F/Disc)	2003	2004	031			023	
	404	DS Supermoto (320mm F/Disc)	2003	2004	031			023	
	404	E (260mm F/Disc)	2003	2004	031			023	
CMX	450	(MX)	2008	2008	031			023	
DS	450	Trail	2007	2009	031			023	
GP	450	(4T)	2013	2015	106			023	
604E	600	DS (Dual Sport/Trail) (260mm F/Disc)	1998	2003	031			023	
604E	600	Supermoto (320mm F/Disc)	1999	2003	031			023	
604RS	600	Roadster (320mm F/Disc)	2000	2003	031			023	
	600	Spitfire	2019	2019	328			023	
	600	Spitfire Bobber	2019	2020	328			023	
	600	Spitfire Bobber Stealth Edition	2019	2020	328			023	
	600	Spitfire Foggy Edition	2019	2020	328			023	
	600	Spitfire Foggy Edition S	2019	2020	328			023	
	600	Spitfire Foggy Stealth Edition	2019	2020	328			023	
	600	Spitfire RAFBF 100	2019	2020	328			023	
	600	Spitfire Six	2019	2020	328			023	
	600	Spitfire Six Stealth Edition	2019	2020	328			023	
	600	Spitfire Stealth	2019	2020	328			023	
R30	604	(Mag Wheel) (604/644) (320mm F/Disc)	2002	2004	031			023	
R30	604	(Spoke Wheel) (604/644) (320mm F/Disc)	2002	2004	031			023	
DS	644	(320mm F/Disc)	2004	2004	031			023	
DS	644	Supermoto (320mm F/Disc)	2004	2004	031			023	
FT	650		2008	2008	031			023	
LX	700	- 4 A Quad	2008	2009	144	144		281	
FT	710	S Flat Tracker	2008	2009	031			023	
		CECTEK							
	500	EFI Gladiator	2009	2010	230	230	005	005	
	500	EFI King Cobra	2009	2010	329	329	005	005	
	500	EFII Quadrift	2009	2010	329	329	005	005	
	500	i Estoc	2010	2010	329	329	005	005	
CF	125	T-21A E-Charm	2010	2012	334			018	
CF	125	T-22/22A Glory	2010	2011	334			152	
CF	150	-3 (150NK)	2015	2015	361				
CF	150	Leader	2010	2012	289				
CF	150	T-5i E-Charm	2010	2012	334				
CF	150	T-6/6A Glory	2010	2011	334			152	
CF	150	T-Si	2010	2011	334			018	
CF	250	T - 6A Jetmax (Scooter)	2012	2015	011	011		152	
CF	250	T-5 V5 Custom	2011	2012	048			018	
C FORCE	400	AU ATV	2018	2018	389	389			
C FORCE	400	S ATV	2019	2019	389	389			
C FORCE	500	S Short Wheel Base ATV	2018	2018	389	389	390	390	
C FORCE	500	S Short Wheel Base EPS ATV	2019	2019	389	389	390	390	
CF	500	3 (Rancher 500 Side x Side)	2010	2011	002				
CF	500	-5 (Rancher UTV)	2011	2014	009	002		281	216
CF	500	5B/5C - C/Force Classic	2014	2015	284	284		281	216
CF	500	AU-6L - C Force 550 (ATV)	2015	2015	284	284		002	
CF	500	C/Force (X5 Terralander)	2011	2015	284	284		281	216
CF	500	US - Z Force 550 (Side x Side)	2015	2015	002	009		362	
CF	500	UU-A U-Force (Side x Side)	2015	2015	002	009	362	362	
U FORCE	500	HO Power Steering UTV	2018	2018	389	389	390	390	
U FORCE	500	Power Steering UTV	2019	2019	389	389	390	390	
Z FORCE	500	/ Z5/500 EPS Snyper SSV	2019	2019	389	389	390	390	
Z FORCE	500	Z5/ 500 Snyper SSV	2018	2018	389	389	390	390	
CF	600	Z Force Z6 (Side x Side)	2013	2015	009	002	362	362	
CF	600	Z Force Z6-EX (Side x Side)	2013	2015	009	002	362	362	
	600	C-Force	2020	2020	389	389	362	362	
	600	C-Force EPS	2018	2019	389	389	362	362	
CF	625	-3 (Z6 Terra Cross)	2011	2012	009	002		009	
CF	625	C/Force (X6 Terralander)	2011	2015	284	284		281	216
	650	NK	2012	2015	104	124		093	
	650	TK	2013	2015	104	124		093	
	650	TR	2013	2014	104	124		093	
C FORCE	800	XC Power Steering 2 Rider ATV	2019	2019	389	389	390	390	
CF	800	-2 - C/Force (ATV)	2014	2015	284	284		281	
CF	800	3 (Tracker 800 Side x Side)	2013	2013	002	009		047	
CF	800	UU-AA U- Force (Side x Side)	2014	2016	002	009	005	005	
CF	800	Z Force Z8 (Side x Side)	2013	2015	002	009	362	362	
CF	800	Z Force Z8 - EX (Side x Side)	2014	2015	002	009	362	362	
U FORCE	800	800 EX / EPS UTV	2019	2019	389	389	390	390	
U FORCE	800	EX UTV	2018	2018	389	389			
Z FORCE	800	/Z8/800 Trail EPS Snyper SSV	2019	2019	389	389	390	390	
Z FORCE	800	Z8/800 Trail Snyper SSV	2018	2018	389	389	390	390	

Type	ccm		from	to	FL	FR	RL	RR	P
Z FORCE	800	Z8EX/800 EX EPS Snyper SSV	2019	2019	389	389	390	390	
Z FORCE	800	Z8EX/800EX Snyper SSV 800cc	2018	2018	389	389	390	390	
	950	Z-Force	2020	2020	389	389	362	362	
Z FORCE	1000	Z1000EX/1000EX EPS Snyper SSV 1000cc	2019	2019	389	389	390	390	
Z FORCE	1000	Z1000EX/1000EX Snyper SSV 1000cc	2018	2018	389	389	390	390	
	1000	U-Force	2020	2020	389	389	390	390	
	1000	Z-Force	2020	2020	389	389	362	362	
		CIMATTI							
		Gringo		1985	159				
		CLUB CAR							
	294	Carryall	2004	2006	315				
XRT	1500		2004	2006	315				
		COBRA							
CX	50	FWE	2018		400			400	
CX	50	JR	2018		400			400	
CX	50	P3	2018		400			400	
CX	65		2013	2013	319			320	
		CONTI							
RX	356	V3 (12" wheels)	2005	2006	233			121	
RX	356	V3 (17" wheels)	2005	2006	233			121	
		CPI							
GP	50	Aragon	2007	2012	136				
GTR	50	(1 Pin Pad Fixing Front Caliper)	2003	2013	152			150	
GTR	50	(2 Pin Pad Fixing Front Caliper)	2002	2002	122			137	
GTS	50		2002	2003	122			137	
SM	50		2011	2012	121			121	
SM	50	Black Tiger	2008	2009	121			121	
SMX	50	Supermoto	2003	2009	121			121	
SX	50		2006	2007	122			121	
SX	50		2011	2012	121			121	
XT	50	Quad	2006	2009				009	
	50	Aragon	2007	2009	136				
	50	Aragon Club	2007	2012	136				
	50	Aragon S-Line	2007	2012	136				
	50	Argon GP Paddock	2008	2012	136				
	50	Baby J	2002	2002	047				
	50	Bravo	2012	2012	011				
	50	Formula Basic	2007	2008	136				
	50	Formula R	2007	2008	136				
	50	Freaky	2007	2007	136				
	50	Hussar	2001	2002	047				
	50	Hussar	2003	2005	136				
	50	Mars	2001	2001	047				
	50	Oliver (All Models)	2006	2012	136				
	50	Popcorn	2002	2002	047				
	50	Popcorn	2003	2006	136				
	50	Supercross	2003	2009	121			121	
	50	Supermoto (Low level exhaust)	2006	2009	121			121	
	100	Quad (Crab)	2003	2004				047	
GP	125	Aragon	2007	2012	136				
GTR	125	(1 Pin Pad Fixing Front Caliper)	2003	2013	152			150	
GTR	125	(2 Pin Pad Fixing Front Caliper)	2002	2002	122			137	
GTS	125		2002	2003	122			137	
SM	125		2011	2012	121			121	
SUV	125		2011	2012	011				
SX	125		2011	2012	121			121	
XR	125	Sprint	2011	2012	011				
	125	Aragon S-Line	2007	2012	136				
	125	Bravo	2012	2012	011				
	125	Prince	2001	2001	332				
	125	Sauel			041			003	
	125	X-Large	2002	2003	152	152		152	
	125	X-Large	2011	2012	332			332	
GTR	150	(1 Pin Pad Fixing Front Caliper)	2003	2013	152			150	
GTR	150	(2 Pin Pad Fixing Front Caliper)	2002	2002	122			137	
	150	X-Large	2002	2003	152	152		152	
GTS	200		2002	2003	122			137	
	200	X-Large	2002	2003	152	152		152	
SM	250		2009	2012	121			211	
ST	250	Sector quad	2005	2006	047	047			
SX	250		2009	2012	121			211	
XR	250		2012	2012	011			011	
XS	250	Quad	2006	2009	230	230		283	
	250	X-Large	2011	2012	011			011	
	300	X-Large	2011	2012	332			332	
		CQR							
DN	50		2005	2005				047	
DN	50	E	2005	2005				047	
DN	100		2005	2006				047	
DN	100	E	2005	2005				047	
DN	150		2005	2005				047	
DN	150							047	
DN	150	E	2005	2005				047	
DN	150	Extreme						047	

GOLD fren

Type	ccm		from	to	FL	FR	RL	RR	P
DN	250		2005	2005				047	
DN	250	/Hammel	2006	2006	047	047		047	
DN	250	Dolphin	2006	2006				047	
	250	Utility	2006	2006	047	047		047	
RX	260		2006	2006	047	047		047	
	125	Ona (4T)	2004	2006	136			136	
	125	Scoo (4T)	2004	2006	136			136	
		CUSHMAN							
	800	Cushman Hauler	2012	2018	315				
	1200	Cushman Hauler	2012	2015	315				
		DAELIM							
DX	50	D Camper	2003	2003	114				
ES	50	S-Four 50cc	2010	2012	332				
GZ	50	Message	1997	2002	110				
M	50	D/MD Millenium	2003	2003	114				
SE	50	C Bonita	2009	2012	110				
SE	50	R Cordi	2005	2012	110				
SJ	50	A-Four (50 cc)	2006	2009	334				
	50	E-Five (SJ50A)	2003	2006	110				
	50	S'Five (SJ50)	2001	2012	110				
	50	Tapo Message	2004	2004	144				
ST	90	Pro Monkey	2003	2003	114				
	100	Delfino (SH100)	2001	2004	110				
	110	Citi Ace	2003	2011	011				
NS	125	DLX/III Trans Eagle	2003	2007	144			144	
NS	125	Otello DLX	2000	2002	144				
S	125		2003	2003	121				
S1	125	(SL125)	2007	2014	367			144	
S3	125	(SV125)	2010	2011	367			332	
S3	125	(SV125)	2012	2014	367			286	
SC	125	Besbi	2008	2013	071				
SL	125	Otello Fi	2007	2009	367			144	
SN	125	B-Bone	2009	2014	367			144	
SQ	125	Freewing A2	2006	2006	022			332	
SQ	125	S2 Freewing	2007	2009	367			144	
ST	125		2003	2003	122			121	
SU	125	Delfino	2007	2011	332				
VJ	125	Roadwin	2004	2013	014			332	
VJF	125	Roadwin R Fi	2008	2014	014			332	
VL	125	Daystar/L	2003	2014	014				
VS	125	Evolution	2001	2004	014				
VT	125	Evolution	2003	2003	014				
	125	Altino	2001	2004	144				
	125	Altino ES	2001	2004	144				
	125	History	2001	2006	144			144	
ET	250	Quad	2005	2008	047	047		286	
S3	250	(SV 250)	2012	2014	367			286	
SQ	250	Freeway S2	2006	2006	022			332	
ST	250	Sector Quad	2005	2006	047	047		286	
VJF	250	Roadsport	2010	2014	022	022		332	
VJF	250	Roadwin R Fi	2008	2010	022	022		332	
VL	250	Daystar	2013	2014	022	022		332	
ET	300	Quad	2007	2009	047	047		286	
		DAYTONA							
DY	125	RS EURO 4	2017	2017	392				
		DB MOTORS							
ZZ	50	Pirat	2000	2000	038				
ZZ	50	Sport	2000	2000	038				
		DERBI							
DRD	50	Senda R	2002	2002	122			121	
DRD	50	Senda Evo SM (Cast wheels)	2008	2011	152			211	
DRD	50	Senda Pro R Radial Caliper (260mm disc)	2005	2013	152			211	
DRD	50	Senda Pro SM Radial Caliper (300mm disc)	2005	2014	152			211	
DRD	50	Senda Racing R (300mm disc / Std mounted caliper)	2004	2010	122			121	
DRD	50	Senda Racing R (Spoke wheel/260 mm F disc)	2011	2012	122			047	
DRD	50	Senda Racing SM (300mm disc / Std mounted caliper)	2004	2010	122			121	
DRD	50	Senda SM (Double Disc Model / SR3A1A)	2005	2005	121	121		121	
DRD	50	Senda SM (Double Disc Model) SDR1DB	2002	2003	095	095		121	
DRD	50	Senda SM Black Edition	2003	2003	095			121	
DRD	50	Senda SM Black Edition	2005	2005	121	121		121	
DRD	50	Senda SM Racing LTD (SR2A2B Cast Wheels / Double F Disc)	2005	2007	121	121		121	
DRD	50	Senda SM Supermotard	2004	2011	121			121	
DRD	50	Senda X-Treme R (21"spoke wheel/260mm/front disc)	2011	2014	047			047	
DRD	50	Senda X-Treme SM (Cast Wheel/260mm F disc/17" Front wheel)	2011	2014	152			047	
DRD	50	Supermoto	2003	2004	121			121	
DRD	50	Senda Racing SM (Cast wheel/260mm F/Disc)	2011	2012	122			047	
GP1	50		2001	2003	121			121	
GP1	50	Euro 2 Chain Driven / Radial Cal. / 5-Bolt Fixing	2005	2005	152			121	
GP1	50	Open	2006	2011	122			121	

Type	ccm		from	to	FL	FR	RL	RR	P
GP1	50	Race Chain Driven / Rad. Cal / 5-Bolt Fixing	2005	2007	152			121	
GPR	50	(40mm Forks / 180mm R/Disc / Rad. Caliper)	2004	2007	152			121	
GPR	50	2T (41 mm Forks/218mm R/Disc/Radial Caliper)	2009	2011	233			121	
GPR	50	Nude (Radial Caliper/180mm R/Disc)	2004	2009	152			121	
GPR	50	R (218mm R/Disc)	1997	2001	095			121	
GPR	50	Racing (40mm Forks/180mm R/disc/ Radial Caliper)	2008	2010	152			121	
GPR	50	Replica Racing (218mm R/Disc)	1999	2003	095			121	
	50	Atlantis (2T) Up to Ref No 8G253171 12"/5 Spoke Wheels/ 190mm 3-Bolt	2007	2007	121				
	50	Atlantis (2T/AC) (12" / 5 spoke wheels/200mm Disc From Ref no 8G253172/5 Bolt)	2007	2011	289				
	50	Atlantis (4T)	2007	2009	289				
	50	Atlantis (4T) (13" 3 Spoke Wheels)	2004	2006	121				
	50	Atlantis (AC/2T)	1999	2002	121				
	50	Atlantis Bullet (AC/2T)	2003	2005	121				
	50	Atlantis City (AC/2T)	2003	2006	121				
	50	Atlantis LC (4T)	1999	2001	121				
	50	Atlantis Red Bullet (AC/2T)	2003	2003	121				
	50	Atlantis Two Chic (AC/2T)	2005	2005	121				
	50	Boulevard (2T)	2009	2012	293				
	50	Boulevard (4T)	2009	2009	293				
	50	Hunter	1996	1999	121				
	50	Paddock (AC/2T)	1998	1999	121				
	50	Predator (AC/2T)	1998	2001	121				
	50	Predator (LC/2T) 3 Bolt Front Disc / USD Showa Forks	1998	2003	121			121	
	50	Predator (LC/2T) 5 Bolt Front Disc / STD Paioli Forks	1998	2003	121			121	
	50	Red Bullet	2004	2005	121				
	50	Senda Black Edition	2003	2003	095			121	
	50	Senda R	1996	2002	121			121	
	50	Senda X Race R (240mm disc)	2005	2009	121			121	
	50	Senda X-Race SM (260mm)	2006	2011	121			121	
	50	Senda X-treme R (240mm Disc)	2003	2011	121			121	
	50	Senda X-Treme SM (260mm disc)	2003	2011	121			121	
	50	Sonar 2S (2T)	2010	2011	137				
	50	Vamos	1996	1999	121				
	50	Vamos FL	1996	1999	121				
	50	Variant Sport (2T) (2T)	2012	2012	293				
	50	Vibrant Sport (2T)	2012	2012	293				
	50	X Race	2006	2006	121			121	
GPR	80	Cup (Radial Caliper)	2004	2005	152			121	
	100	Atlantis (4T) (13" - 3 Spoke Wheels)	2004	2006	121				
	100	Atlantis (AC/2T)	2000	2001	121				
DRD	125	Senda R	2010	2012	152			289	
DRD	125	Senda SM	2010	2014	152			289	
GP1	125	Racing (Low seat/Radial Caliper / 6 bolt disc fixing)	2007	2009	233			211	
GP1	125	Scooter (Full height seat/5bolt fixing front disc)	2006	2006	152			152	
GPR	125	(4T) 4V	2009	2014	233			289	
GPR	125	Nude (Radial Caliper) (2T)	2004	2008	233			121	
GPR	125	Racing (Radial Caliper) (2T)	2004	2007	233			121	
	125	Boulevard	2003	2007	211				
	125	Boulevard (4T)	2008	2012	293				
	125	Boulevard S	2007	2007	010			150	
	125	Cross City	2007	2008	122			211	
	125	Cross City	2009	2014	278			211	
	125	Mulhacen (4T) From Ref. No. 7N001791 (Spoke Wheel / Single Pad Fixing)	2007	2010	278			289	
	125	Mulhacen (4T) Up to Ref No 7N001790 / Spoke Wheel / 2 Pad Fixing	2007	2007	122			289	
	125	Mulhacen Cafe (Cast wheel/Radial Caliper)	2008	2010	152			289	
	125	Rambla	2008	2012	010			150	
	125	Senda Baja R (4T) (260mm disc)	2006	2012	122			211	
	125	Senda Baja SM (4T) (300mm disc)	2006	2012	122			211	
	125	Senda R VIN # SCA1A	2004	2004	122			211	
	125	Senda R VIN # SCB1A	2004	2004	095			211	
	125	Senda SM (Twin Headlight)	2004	2007	122			211	
	125	Sonar (4T)	2010	2011	137				
	125	Terra Adventure	2007	2014	278			289	
	125	Terra Euro (Single Pin Pad Fixing)	2007	2011	278			289	
	125	Variant Sport (4T)	2012	2012	293				
	150	Boulevard	2003	2007	211				
	150	Sonar (4T)	2009	2010	137				
DXR	200	Quad (Front Disc Model)	2004	2007	047	047		005	
DXR	200	Quad (Front Drum Model)	2004	2005				005	
	200	Boulevard	2005	2005	211				
DXR	250	Quad (From Disc Model)	2004	2007	047	047		005	
DXR	250	Quad (Front drum model)	2004	2005				002	
GP1	250		2005	2005	152			038	
GP1	250	Racing (Low seat/Radial caliper 6 bolt disc fixing)	2007	2009	233			211	
GP1	250	Scooter	2006	2007	152			152	
	250	i Rambla	2008	2009	010			150	
	300	i Rambla	2010	2012	010			150	

Type	ccm		from	to	FL	FR	RL	RR	P
	659	Mulhacen	2006	2008	177			152	
		DINLI							
DL	450	RS (DL901)	2006	2009	005	005		005	
		DUCATI							
	250	Desmo (4 Bolt Disc Fixing)	1974	1977	081				
	350	Desmo (4 Bolt Disc Fixing)	1974	1977	081				
	400	Monster	1995	1997	064	064		038	
	400	Monster (Japan)	2000	2004	141			038	
	400	Monster (Single Disc)	2000	2002	141			038	
	400	Monster (Twin Disc)	2003	2004	141	141		038	
	400	Monster Dark ie (Japan)	2005	2006	141			038	
	400	Monster Dark ie (Single Disc)	2005	2005	141			038	
	400	Monster ie (Japan)	2007	2008	031	031		038	
	400	Scrambler Sixty 2	2016	2020	106			023	
	400	Supersport (Single Disc)	1993	1997	064			038	
	400	Supersport (Twin Disc)	1993	1997	064	064		038	
	450	Desmo (4 Bolt Disc Fixing)	1974	1977	081				
	500	GTL	1975	1975	038	038			
	500	GTV Pantah	1977	1977	038	038		038	
	500	Pantah	1979	1979	038	038		038	
	500	Sport Desmo	1977	1977	038	038		038	
	549	cc Supermono	1993	1995	064	064		121	
	600	Monster	2000	2001	141			038	
	600	Monster (Single Disc)	1993	1999	064			038	
	600	Monster (Twin Disc)	1993	1997	064	064		038	
	600	Monster City/City Dark	1999	1999	064			038	
	600	Monster Dark	1998	1999	064			038	
	600	Pantah	1981	1981	081	081		038	
	600	Supersport (Single Disc)	1991	1997	064			038	
	620	IE Monster (First Series)	2002	2005	141	141		038	
	620	IE Monster (Second series)	2003	2005	031	031		038	
	620	Monster	2005	2006	031	031		038	
	620	Monster Dark	2003	2004	141			038	
	620	Monster Dark	2005	2006	031	031		038	
	620	Monster ie (Single Disc)	2003	2004	141			038	
	620	Multistrada (Twin Disc/Single Pin Pad Fixing)	2006	2006	141	141		038	
	620	Multistrada Dark (Single Disc/Twin Pin Pad Fixing)	2006	2006	064			038	
	620	Sport	2003	2003	141	141		038	
	650	Pantah	1984	1984	081	081		081	
	695	Monster	2007	2008	031	031		038	
	696	Monster	2008	2014	141	141		152	
	696	Monster + (inc ABS Models)	2009	2012	141	141		152	
	696	Monster 20th Aniversary Model	2013	2013	141	141		152	
	748	Biposto	1995	1998	064	064		038	
	748	Biposto	1999	2002	141	141		038	
	748	R (2 Pad caliper)	2000	2000	141	141		038	
	748	R (4 pad Caliper)	2001	2002	177	177		038	
	748	S (Biposto)	2000	2002	141	141		038	
	748	S (Monoposto)	2000	2002	141	141		038	
	748	SP	1995	1998	064	064		038	
	748	SP/Monoposto	1999	2002	141	141		038	
	748	SPS (748/H199)	1998	1999	141	141		038	
	748	Testa Bassa (Mono/Biposto)	2007	2007	141	141		038	
	749	(Monoposto/Biposto)	2003	2006	177	177		152	
	749	Dark (Monoposto/Biposto)	2004	2006	177	177		152	
	749	R (Radial Caliper)	2004	2006	177	177		152	
	749	S (Monoposto/Biposto)	2003	2006	177	177		152	
	750	Monster	2000	2001	141	141		038	
	750	Monster (Single disc)	1996	1997	064			038	
	750	Monster (Twin Disc)	1996	1998	064	064		038	
	750	Monster / Monster Dark	1999	1999	064	064		038	
	750	Monster City / City Dark	1999	1999	064	064		038	
	750	Monster ie	2002	2002	141	141		038	
	750	Paso	1987	1990	081	081		038	
	750	Sport	1988	1990	081	081		081	
	750	Sport	2001	2002	141	141		152	
	750	Sport (4 bolt disc fixing)	1974	1974	365				
	750	Supersport	1999	1999	141	141		152	
	750	Supersport (Single disc)	1991	1998	064			038	
	750	Supersport (Twin disc)	1991	1998	064	064		038	
	750	Supersport IE	2000	2002	141	141		152	
	751	F1	1998	1998	081	081		081	
	796	Hypermotard	2010	2013	141	141		152	
	796	Monster (ABS models)	2010	2014	141	141		152	
	796	Monster (Non ABS Models)	2010	2013	141	141		152	
	796	Monster 20th Aniversary Model (ABS & Non ABS)	2013	2013	141	141		152	
	797	+ Monster	2018	2020	328	328		023	
	797	Monster	2017	2020	328	328		023	
	800	Monster	2003	2004	141	141		038	
	800	Sport	2003	2003	141	141		038	
	800	Supersport	2003	2005	141	141		152	
S2R	803	Monster	2005	2006	031	031		038	
S2R	803	Monster Dark	2006	2006	031	031		038	
	803	Scrambler Café Racer (Cast Wheels)	2017	2020	328	328		023	
	803	Scrambler Classic (Spoke Wheels)	2015	2020	328	328		023	
	803	Scrambler Desert Sled (Spoke Wheels)	2017	2020	328	328		023	
	803	Scrambler Flat Track Pro	2016	2016	328	328		023	
	803	Scrambler Full Throttle (Cast Wheels)	2015	2020	328	328		023	
	803	Scrambler Icon (Cast Wheels)	2015	2020	328	328		023	
	803	Scrambler Mach 2 (Cast wheels)	2018	2020	328	328		023	
	803	Scrambler Street Classic (Cast wheels)	2018	2020	328			023	
	803	Scrambler Urban Enduro (Spoke Wheels)	2015	2016	328			023	
	821	Hypermotard	2013	2016	328	328		152	
	821	Hypermotard SP	2013	2016	328	328		152	
	821	Hyperstrada	2013	2016	328	328		152	
	821	Monster	2015	2020	328	328		152	
	821	Monster Dark/Monster Stripe	2015	2020	328	328		152	
	848	(Radial 2 Pad Caliper)	2008	2010	141	141		152	
	848	Evo (Monobloc front calipers)	2010	2013	258	258		152	
	848	Evo Corse SE	2012	2013	258	258		152	
	848	Evo Dark	2012	2012	258	258		152	
	848	Streetfighter	2011	2015	141	141		152	
	851	Superbike Biposto	1989	1992	064	064		038	
	860	GT/GTX	1975	1976	081	081		081	
SP4	888		1992	1993	064	064		038	
SP5	888		1992	1993	064	064		038	
	888	Superbike Strada	1994	1995	064	064		038	
	899	Panigale	2014	2015	328	328		152	
907	900	IE	1990	1993	064	064			
	900	GTS (4 bolt disc fixing) (front & rear)	1975	1976	081	081		081	
	900	Hailwood Replica (6 bolt disc fixing)	1979	1979	081	081		081	
	900	MH Evoluzione	2000	2001	141	141		152	
	900	Monster	1993	1999	064	064		038	
	900	Monster City/City Dark	1999	1999	064	064		038	
	900	Monster Cromo/Special	1998	1998	064	064		038	
	900	Monster IE	2000	2001	141	141		038	
	900	SD Darmah (4 bolt front and rear disc fixing)	1977	1977	081	081		081	
	900	SD Darmah (6 bolt disc fixing front & rear)	1978	1978	081	081		081	
	900	SD Darmah (6 bolt front disc fixing / 4 bolt rear disc fixing)	1978	1978	081	081		081	
	900	Sport	2002	2002	141	141		152	
	900	Supersport	1989	1990	064	064		038	
	900	Supersport	1998	1999	141	141		152	
	900	Supersport / Superlight	1991	1997	064	064		038	
	900	Supersport CR USA	1998	1998	064	064		038	
	900	Supersport FE	1998	1998	064	064		038	
	900	Supersport IE	2000	2001	141	141		152	
	906	Paso	1988	1989	081	081		081	
	907	IE	1990	1993	064	064		038	
ST4	916		1999	2002	141	141		152	
	916	Biposto	1994	1996	064	064		038	
	916	Monster S4	2001	2002	141	141		038	
	916	Monster S4 Foggy	2002	2002	141	141		038	
	916	Senna	1994	1998	064	064		038	
	916	SP	1994	1996	064	064		038	
	916	SPS (996cc)	1997	1998	064	064		038	
	936	Supersport	2017	2020	328	328		152	
	936	Supersport S	2017	2020	328	328		152	
	939	Hypermotard	2016	2020	328	328		152	
	939	Hypermotard SP	2016	2020	328	328		152	
	939	Hyperstrada	2016	2017	328	328		152	
ST2	944		1997	1999	141	141		152	
ST2	944		2000	2003	141	141		152	
	950	Multistrada (936cc)	2017	2020	328	328		031	
	955	Panigale V2	2019	2020	328	328		152	
	955	Panigale V2 Bomber	2019	2020	328	328		152	
	959	Panigale (ABS)	2016	2019	328	328		152	
	959	Panigale Corse (ABS)	2018	2019	328	328		152	
	985	Panigale (ABS)	2016	2019	328	328		152	
RR	989	Desmosedici (D16RR)	2008	2008	258	258		152	
	990	Supermoto R (SM-R)	2010	2011	258	258			
ST3	992	(Non ABS)	2004	2007	141	141		152	
ST3S	992	(ABS Model)	2006	2007	141	141		152	
	992	Classic Sport Biposto	2007	2007	106	106		023	
S4R	996	Monster	2003	2006	141	141		038	
S4R	996	Monster (2 pad caliper)	2005	2006	141	141		038	
ST4S	996	cc (ABS)	2003	2005	141	141		152	
ST4S	996	cc (Non ABS Model)	2001	2005	141	141		152	
	996	(Monoposto/Biposto)	1999	2001	141	141		038	
	996	R	2001	2001	177	177		038	
	996	S	2001	2001	141	141		038	
	996	SPS (996cc)	1999	1999	141	141		038	
S4R	998	Monster Testastretta (Radial 4 pad caliper)	2007	2008	177	177		038	
S4RS	998	(Tricolore/ Monster Testastretta) Radial 4 pad caliper	2008	2008	177	177		038	
S4RS	998	Monster (Radial 4 pad Caliper)	2006	2006	177	177		038	
S4RS	998	Monster Testastretta (Radial 4 pad caliper)	2007	2007	177	177		038	
	998	(Monoposto / Biposto) (2 Pad caliper)	2002	2003	141	141		038	

Type	ccm		from	to	FL	FR	RL	RR	P
	998	Matrix	2004	2004	141	141		038	
	998	R	2002	2002	177	177		038	
	998	S (4pad Caliper)	2002	2004	177	177		038	
	998	S Baylis/Bostrom	2002	2002	177	177		038	
	999	(Std Mount Caliper)	2003	2006	177	177		152	
	999	R (Radial mount caliper)	2003	2006	177	177		152	
	999	R Fila (Radial Mount Caliper)	2003	2003	177	177		152	
	999	R Xerox	2006	2006	177	177		152	
	999	S (Radial Caliper) (Monoposto/Biposto)	2005	2006	177	177		152	
	999	S (Std Mount Caliper) (Monoposto/ Biposto)	2003	2004	177	177		152	
GT	1000	(992 ccm)	2007	2010	106	106		023	
GT	1000	Touring (992cc)	2009	2009	106	106		023	
S2R	1000	Monster (992cc)	2006	2008	141	141		038	
	1000	Monster Dark	2003	2003	141	141		038	
	1000	Monster ie (992cc)	2004	2005	141	141		038	
	1000	Monster S ie (992cc)	2003	2005	141	141		038	
	1000	Multistrada DS (992cc)	2003	2006	141	141		152	
	1000	Multistrada S DS (992cc)	2005	2006	141	141		152	
	1000	Paul Smart LE (992cc)	2006	2006	106	106		023	
	1000	R1 Hailwood Replica	1984	1984	081	081		081	
	1000	Sport Classic (992cc) (Monoposto - Japan/Biposto - Europe)	2006	2008	106	106		023	
	1000	Sport S	2007	2009	106	106		023	
	1000	Sport S (992cc)	2007	2007	106	106		023	
	1000	Supersport DS (992cc)	2003	2006	141	141		152	
	1098		2007	2008	258	258		152	
	1098	R	2008	2009	258	258		152	
	1098	S	2007	2008	258	258		152	
	1098	S Tricolore	2007	2007	258	258		152	
	1100	EVO Hypermotard	2010	2012	141	141		152	
	1100	EVO SP Hypermotard	2010	2012	258	258		152	
	1100	Hypermotard	2007	2009	141	141		152	
	1100	Hypermotard S	2008	2009	258	258		152	
	1100	Monster (ABS & Non ABS)	2009	2010	141	141		152	
	1100	Monster Diesel	2013	2013	141	141		152	
	1100	Monster EVO	2011	2013	141	141		152	
	1100	Monster EVO - 20th Anniversary Model	2013	2013	141	141		152	
	1100	Multistrada (1078cc)	2007	2009	141	141		152	
	1100	Panigale V4 (1103cc)	2018	2020	258	258		152	
	1100	Panigale V4 S (1103cc)	2018	2020	258	258		152	
	1100	S Monster (ABS & Non ABS)	2009	2010	141	141		152	
	1100	S Multistrada (1078cc)	2007	2009	141	141		152	
	1100	Scrambler (1079cc)	2018	2020	328	328		023	
	1100	Scrambler Special (1079cc)	2018	2020	328	328		023	
	1100	Scrambler Sport (1079cc)	2018	2020	328	328		023	
	1100	Streetfighter (1099cc)	2009	2011	258	258		152	
	1100	Streetfighter S (1099cc)	2009	2013	258	258		152	
	1100	Streetfighter V4 (1103cc)	2019	2020	258	258		152	
	1100	Streetighter V4 S (1103cc)	2019	2020	258	258		152	
	1103	Streetfighter V4	2019	2020	258	258		152	
	1103	Streetfighter V4 S	2019	2020	258	258		152	
	1198		2009	2011	258	258		152	
	1198	R Corse	2010	2010	258	258		152	
	1198	S	2009	2010	258	258		152	
	1198	S Corse	2009	2010	258	258		152	
	1198	SP	2011	2011	258	258		152	
	1199	Panigale	2012	2013	258	258		152	
	1199	Panigale ABS	2012	2015	258	258		152	
	1199	Panigale R	2013	2016	258	258		152	
	1199	Panigale S ABS	2012	2015	258	258		152	
	1199	Panigale S Tricolore	2012	2013	258	258		152	
	1199	Superleggera	2014	2014	258	258		152	
	1200	Multistrada S Granturismo	2013	2014	141	141		152	
	1200	Diavel ABS	2011	2018	258	258		106	
	1200	Diavel AMG	2011	2012	258	258		106	
	1200	Diavel Carbon ABS	2011	2019	258	258		106	
	1200	Diavel Dark (ABS)	2013	2014	258	258		106	
	1200	Diavel Diesel	2017	2018	258	258		106	
	1200	Diavel Chromo ABS	2012	2012	258	258		106	
	1200	Diavel Strada	2013	2014	258	258		106	
	1200	Monster	2014	2020	328	328		152	
	1200	Monster R	2016	2018	258	258		152	
	1200	Monster S	2014	2020	258	258		152	
	1200	Monster Stripe	2015	2019	258	258		152	
	1200	Multistrada (ABS (Single PIn F/Caliper)	2015	2018	328	328		106	
	1200	Multistrada ABS	2010	2014	141	141		152	
	1200	Multistrada DVT	2015	2017	328	328		152	
	1200	Multistrada Enduro	2016	2016	328	328		106	
	1200	Multistrada Enduro	2017	2018	328	328		031	
	1200	Multistrada Enduro Pro	2018	2019	328	328		031	
	1200	Multistrada S Pikes Peak	2011	2014	141	141		152	
	1200	Multistrada Standard	2010	2011	141	141		152	
	1200	Multistrada Touring	2015	2017	258	258		031	
	1200	S Multistrada	2015	2018	258	258		106	
	1200	S Multistrada D Air	2015	2017	258	258		106	

Type	ccm		from	to	FL	FR	RL	RR	P
	1200	S Multistrada D Air DVT	2015	2017	258	258		152	
	1200	S Multistrada DVT	2015	2017	258	258		152	
	1200	S Multistrada Pikes Peak	2016	2017	258	258		106	
	1200	S Multistrada Sport Edition	2010	2012	141	141		152	
	1200	S Multistrada Touring	2015	2018	258	258		031	
	1200	S Multistrada Touring Edition	2010	2014	141	141		152	
	1260	Multistrada	2018	2020	328	328		031	
	1260	Multistrada Enduro	2018	2020	258	258		031	
	1260	Multistrada S Grand Tour	2019	2020	258	258		031	
	1260	Multistrada Touring	2018	2018	328	328		031	
	1260	S Multistrada	2018	2020	258	258		031	
	1260	S Multistrada D Air	2018	2020	258	258		031	
	1260	S Multistrada Pikes Peak	2018	2020	258	258		031	
	1262	Diavel Diesel	2017	2018	258	258		106	
	1262	XDiavel	2016	2020	328	328		106	
	1262	XDiavel S	2016	2020	258	258		106	
	1299	Panigale	2015	2018	258	258		152	
	1299	Panigale R	2015	2017	258	258		152	
	1299	Panigale R Final Edition	2018	2018	258	258		152	
	1299	Panigale S	2015	2018	258	258		152	
	1299	Panigale V4 Corse/Speciale	2018	2020	258	258		152	
	1299	Panigale V4 R	2019	2020	258	258		152	
	1299	Superleggera	2017	2017	258	258		152	
		EASY RIDER							
	50	Easy Rider	1999	1999	042				
JC	125	/8 Dragon	1998	1998	289				
		EBR							
	1190	RS (Sport)	2014	2015	269			290	
	1190	RX (Sport)	2014	2015	269			290	
	1190	SX (Naked)	2014	2015	269			290	
		ECO							
	150	Bushman (LX 150 GY)			002			121	
		ELSTARS							
		Pit Bikes - Various Models (Check parts before fitting)			250			250	
		ENDRESS							
EMR	50		1995	1995	071				
		ENERGICA ELECTRIC							
		Electric EGO	2020	2020	258	258		152	
		Electric EVA	2020	2020	258	258		152	
		Electric EVA Esse Esse 9	2020	2020	258	258		152	
		E-TON							
BXL	50	Draco	2005	2006				047	
EXL	50	Viper 50	2007	2007				047	
RXL	50	Viper	2003	2006				047	
RXL	50	Viper Mini 50 M	2003	2007				047	
RLX	70	Viper	2005	2007				047	
RXL	90	R Viper 90R Reverse	2003	2007				047	
RXL	90	Viper 90	2003	2007				047	
BXL	100	Draco	2005	2006				047	
CXL	150	Challenger	2003	2007				009	
ELX	150	Eukon ST (Drum front/Disc Rear)	2005	2006				009	
EXL	150	Viper ST Quad	2005	2007	047	047			
EXL	150	Yukon S.T (Rear Drum)	2005	2007	047	047			
RXL	150	Viper	2005	2006				009	
RXL	150	Viper	2007	2007				286	
VXL	250	ST Vector	2006	2007	047	047		286	
VXL	250	Vector	2006	2007	047	047		286	
VTX	300	ST Vortex ST	2007	2007	047	047		286	
VTX	300	Vortex	2007	2007	047	047		286	
VXL	300	ST Vector ST	2007	2007	047	047		286	
VXL	300	Vector	2007	2007	047	047		286	
		E-TROPOLIS (ELECTRIC SCOOTERS)							
		Bel Air	2013	2013	011			011	
		Bel Air Lithium	2014	2014	011			011	
		Future	2013	2013	011			011	
		Miami	2013	2013	011			011	
		Milano	2014	2014	011			011	
		Retro	2013	2013	011			011	
		Retro Lithium	2014	2014	011			011	
		EVA							
		Electric scooter	2013	2014	047			047	
		EXCELSIOR-HENDERSON							
	1386	Deadwood Special	2000	2000	233			233	
	1386	Super X all models	1999	1999	233			233	
		EXPLORER							
KBR	200		2005	2005	095			121	
	300	Ranger 2x4/4x4	2008	2009	288	288		283	
	450	Trasher	2008	2009	005	005		005	
	500	Atlas 4x4	2008	2009	284	284		281	
	500	L Everest 4x4	2008	2009	284	284		281	
		EZ-GO							
		E-Z-GO Express S6	2012	2019	315				
		E-Z-GO TXT G5	2008	2019	315				
		FACTORY							
R14	50	Phantom Aqua	2004	2004	173			121	

Type	ccm		from	to	FL	FR	RL	RR	P
RP	50		2005	2005	122			121	
SM	50	Chrono	2004	2004	122			121	
YM	50		2005	2005	122			121	
YR	50	Desert	2002	2003	121			121	
YR	50	Desert	2004	2005	122			121	
YR	125	4T	2005	2005	122			121	
YR	250	Desert	2003	2003	031			023	
		FANTIC							
		125/5/245/305	1989	1989	121			121	
		Series 7 (All Models)	1990	1990	121			121	
RC	50	Caballero	1991	1991	038			096	
	50	.1 Oasis Kick	1987	1987	120				
	50	.1 Trial	1986	1986	120				
	50	.1 Trial H 20	1987	1987	120				
	50	.5 Trial	1989	1989	121			121	
	50	.7 Trial	1990	1990	121			121	
	50	.9 Trial	1991	1991	121			121	
	50	/50.1 Raider	1981	1981	086				
	50	50.1 Oasis	1986	1986	115			096	
	50	50.1 Oasis KS / Rally	1987	1987	115				
	50	Caballero Regolarita Casa	2006	2009	122			094	
	50	Caballero Regolarita Competizione	2006	2009	031			187	
	50	Caballero Regolarita Competizione Mini	2008	2009	031			187	
	50	Caballero Supersei Competizione	2007	2008	031			187	
	50	Caballero Supersei Motard	2006	2009	122			094	
	50	Clubman	1995	1995	121			121	
	50	Fast			115				
	50	Grinta	1995	2000	114			094	
	50	Koala	1988	1989	038			038	
	50	Koala	1990	1990	096			096	
	50	Leader	1995	1995	114			094	
	50	Oasis E.S.	1987	1987	115			096	
	50	Pony SR	1993	1993	114				
	50	Queenie	1995	1995	114				
	50	Strada	1982	1982	086				
	50	Strada Super SIX	1973	1973	159				
	80	Caballero	1991	1991	038			096	
	80	Caballero RC	1991	1991	038			096	
	80	Clubman	1995	1995	121			121	
	80	Kaloa			096			096	
HP1	125	Sport	1986	1986	184	184			
HP1	125	Sport	1987	1987	096	096			
HP1	125	Strada	1985	1985	120				
TR	125	CR (2T) Cross Competizione	2013	2013	278			176	
TR	125	MR (2T) Motard Competizione	2013	2013				176	
TZ	125	CS (2T) Caballero Cross	2011	2012	278			176	
TZ	125	ES (125 ES / 2T) Regolarita Scuderia	2011	2012	278			176	
TZ	125	MR (2T) Motard Competizione	2013	2013	064				
TZ	125	SM Caballero Motard (2T)	2011	2012	064			176	
	125	/2 Trial	1987	1987	120			120	
	125	/249 Section R	1995	1995	121			121	
	125	Caballero Regolarita Casa	2007	2008	122			094	
	125	Caballero Regolarita Competizione	2007	2009	031			187	
	125	Caballero Supersei Motard	2007	2009	122			094	
	125	Raider			096				
	125	Trial Progress 1	1987	1987	120				
TZ	170	E Regolarita (125 E / 4T)	2011	2015	278			176	
TZ	170	ER Caballero Regolarita Competizione (125 ER / 4T)	2011	2015	278			176	
TZ	170	M Motard Casa (125SM/4T)	2011	2015	278			176	
TZ	170	MR (125 MR 4T) Motard	2011	2015	278			176	
TZ	170	SM Motard (125 SM / 4T)	2012	2015	278			176	
TX	180	E Regolarita (49cc/2T)	2011	2015	278			176	
TX	180	ER Regolarita Copetizione (49cc/2T)	2012	2015	278			176	
TX	180	ES Regolarita Scuderia (49cc/2T)	2012	2015	278			176	
TX	180	SM Motard (49cc/2T)	2011	2015	278			176	
TX	180	SMR Motard Competizione (49cc/2T)	2012	2015	278			176	
TZ	180	MR Motard Competizione (49cc/2T)	2011	2015	278			176	
TZ	200	ER Caballero Regolarita (200 ER / 4T)	2011	2015	278			176	
TZ	200	SMR Motard (200 SMR / 4T)	2011	2015	278			176	
	201	/301 Monoshock	1986	1986	120				
	201	Trial Progress 2	1987	1987	120				
	241	Trial Progress 2	1987	1987	120				
	243	Trial	1987	1987	120			120	
TF	250	ES Regolarita (4T)	2011	2013	278			176	
TR	250	ES (2T) Enduro Six Days	2013	2013	278			176	
TZ	250	ES Regolarita (2T)	2011	2012	278			176	
	250	Coach	1991	1991	038				
	250	K-Roo (All Models)	1992	1995	121			121	
	250	Raider	1985	1986	010				
TR	300	ES (2T) Enduro Six Days	2013	2013	278			176	
TZ	300	ES Regolarita Scuderia	2011	2012	278			176	
	301	Trial	1985	1985	120				
	301	Trial Progress 2	1987	1987	120				

Type	ccm		from	to	FL	FR	RL	RR	P
	303	Monoshock	1987	1987	120			120	
	305		1989	1989	121			121	
	307	Trial	1991	1991	121			121	
	309		1992	1992	121			121	
	343	Trial Progress 2	1987	1987	120			120	
	500	Caballero	2017	2017	328				
		FOR BERINGER							
R		4 Radial Piston Caliper			276				
		4 Piston (Old Design)			032				
		4 Piston (Radial)			231				
		6 Piston (New Design)			212				
		6 Piston (Old design / 2 Piston)						038	
		6 Piston (Old Design / Endurance)			225	225			
		6 Piston (Old Design)			126				
		FTE							
		4 Piston Radial Supermoto			212				
		6 Piston Radial Supermoto			231				
		FYM							
CR	90	E	2006	2007	114				
CR	110		2006	2007	114			121	
CR	110	ESR	2006	2007	114			121	
ES	110		2006	2007	114				
CR	125	R	2006	2007	114			121	
CR3	125		2006	2007	114			121	
	125	X Sport Typhon Quad	2006	2007	114	114		121	
		GAC							
		New T.T.	1987	1987	008				
		GARELLI							
XO'E		(Electric)	2012	2012	011			018	
		Ciclone LC, SM	1986	1986	008				
FX	50		2002	2002	114				
GSP	50	(2T)	2009	2012	136			121	
KRS	50		2002	2002	174				
LX	50	Capri	2006	2008	114				
VIP	50		2007	2007	136				
VIP	50		2008	2008	114				
XO	50	(2T/4T)	2009	2009	136				
XO	50	(TM 50 QT-31) (2T/4T)	2010	2012	136			136	
	50	Capri (DF 50 QT-7)	2006	2006	114				
	50	Ciclone	2007	2007	114				
	50	Flexi	2009	2012	136				
	50	FLO			098, 107				
	50	Sahel	1991	1991	115			121	
	50	Tesse (2T/4T)	2008	2010	136				
	50	Tiger XLE	1986	1986				120	
	50	Urka	1991	1991	083				
	80	Sahel	1991	1991	115			121	
GTA	125		1986	1986	096			096	
TSR	125		1983	1983	184				
XO	125	i (TM 125 T)	2009	2012	011			018	
	125	Comfort	2007	2007	011				
	125	Flexi	2009	2012	136				
	125	Freeland	2002	2002	174				
	125	Joker	2002	2002	174				
	125	Panther	2002	2002	110				
	125	Tiger	2007	2007	332			332	
	125	Tiger XLE	1986	1986	010			096	
	125	XR/XRD Tiger	1985	1985	083				
XO	150	i (TM 150 T)	2009	2012	011			018	
	150	Fashion F	2007	2007	144				
	150	Freeland	2002	2002	174				
	150	Joker	2002	2002	174				
	150	Mosquito	2007	2007	011				
	150	Panther	2002	2002	110				
XO	200	i (TM 200 T)	2009	2012	011			018	
	250	Panther	2002	2002	110				
	250	Skynet	2002	2002	135			098, 107	
	323	Trial	1986	1986	121				
	400	Skynet	2002	2002	135			098, 107	
		GAS GAS							
EC	50	Boy	2001	2004	143			143	
EC	50	Rookie	2001	2004	095			143	
EC	50		2005	2005	122			143	
EC	50	Boy (Air Cooled)	2005	2005	121			173	
EC	50	Boy (LC)	2005	2007	168, 198			173	
EC	50		2006	2007	121			173	
HP	50	Quad Wild	2004	2007	031	031		031	
K	50	Quad	2006	2006				121	
MC	50	Cross	2006	2006	143			173	
SM	50	Rookie	2001	2004	095			143	
SM	50		2005	2005	122			143	
TXT	50	Boy	2001	2001	143			143	
TXT	50		2001	2002	143			143	
TXT	50	(Boy)	2004	2015	121			121	

Type	ccm		from	to	FL	FR	RL	RR	P
TXT	50	Rookie	2004	2009	168, 198			173	
TXT	50	Cadet	2006	2009	121			173	
MC	65	Cross	2005	2006	173			173	
MX	65		2005	2008	173			121	
TXT	80		2001	2002	143			143	
TXT	80	(Rookie)	2002	2003	143			143	
TXT	80	Rookie	2004	2009	168, 198			173	
TXT	80	Cadet	2006	2006	173			173	
TXT	80	Cadet	2007	2009	168, 198			173	
TXT	80	PRO Racing (2T)	2015	2015	168, 198			173	
EC	125		1997	1999	031			023	
EC	125	(2T)	2000	2008	041			003	
EC	125		2010	2015	041			187	
JTR	125		1996	1997	121			121	
JTX	125		1995	1998	121			121	
MX	125	(MC)	2001	2008	041			003	
MX	125	(MC)	2009	2011	041			187	
MX	125		2009	2011	041			187	
SM	125	(2T)	2001	2006	064			003	
SM	125	FSE	2002	2002	064			003	
SM	125	(2T) Supermotard	2003	2006	064			003	
SM	125	Halley	2009	2009	064			003	
TXT	125		1999	2003	143			143	
TXT	125	(TXT PRO)	2004	2011	168, 198			173	
TXT	125	(For models with AJP Caliper with 2 pin pad fixing)	2012	2014	168, 198			173	
TXT	125	(For models with Formula front caliper/ single pin pad fixing)	2012	2014	307			173	
TXT	125	Randonne (4T)	2012	2015	168, 198			173	
TXT	125	Replica Factory (2T Monobloc Caliper)	2013	2014	325			173	
TXT	125	Racing (2T Monobloc Caliper)	2014	2019	325			173	
	125	Pampera	1996	1997	121			121	
	125	Pampera	2004	2004	122			143	
	125	Pampera (2T)	2005	2008	122			003	
	125	Trail Halley	2009	2009	041			003	
JTR	160		1996	1997	121			121	
EC	200	Enduro	1997	1999	031			023	
EC	200	(2T)	2000	2008	041			003	
EC	200	(2T)	2010	2015	041			187	
EC	200	(2T)	2017	2017	041			187	
EC	200	(Euro 4)	2018	2020	041			187	
EC	200	Ranger	2018	2020	041			187	
JTX	200		1995	1998	121			121	
MX	200		1999	2000	041			003	
TX	200		1998	1998	121			121	
TXT	200		1999	2003	143			143	
TXT	200	(TXT PRO)	2004	2011	168, 198			173	
TXT	200	Randonne (4T)	2014	2015	168, 198			173	
HP	240	Wild	2003	2006	031	031		031	
TXT	249		1999	2003	143			143	
EC	250		1997	1999	031			023	
EC	250	(2T)	2000	2008	041			003	
EC	250	(2T)	2010	2011	041			187	
EC	250	(2T)	2012	2015	041			187	
EC	250	F (All Models /4T)	2012	2015	041			187	
EC	250	Cami F (4T)	2014	2015	278			289	
EC	250	(Euro 4)	2018	2020	041			187	
EC	250	Six Days	2019	2019	041			187	
JTR	250		1996	1997	121			121	
KZ	250	RV Quad	2006	2006	002				
MX	250		1999	2000	041			003	
MX	250	(MC)	2001	2008	041			003	
MX	250	(MC)	2009	2011	041			187	
MX	250		2009	2011	041			187	
SM	250	(2T)	2001	2006	064			003	
SM	250	FSE	2002	2002	064			003	
TXT	250	(TXT PRO)	2004	2011	168, 198			173	
TXT	250	(For models with AJP Caliper with 2 pin pad fixing)	2012	2014	168, 198			173	
TXT	250	(For models with Formula front caliper/ single pin pad fixing)	2012	2014	307			173	
TXT	250	Replica Factory (2T Monobloc Caliper)	2013	2014	325			173	
TXT	250	Racing (2T Monobloc Caliper)	2014	2019	325			173	
TXT	250	Contact (2T)	2015	2015	168, 198			173	
XC	250	(Euro 4)	2018	2020	041			187	
	250	Contact JT25 (238cc)	1993	1994	121			121	
	250	Pampera	1996	1999	121			121	
	250	Pampera	2002	2002	122			143	
	250	Pampera	2004	2004	122			143	
JTX	270		1995	1998	121			121	
TX	270		1998	1998	121			121	
TXT	270		1999	2003	143			143	

Type	ccm		from	to	FL	FR	RL	RR	P
TXT	280		1999	2003	143			143	
TXT	280	Boy	2001	2001	143			143	
TXT	280	(TXT PRO)	2004	2011	168, 198			173	
TXT	280	(For models with AJP Caliper with 2 pin pad fixing)	2012	2014	168, 198			173	
TXT	280	(For models with Formula front caliper/ single pin pad fixing)	2012	2014	307			173	
TXT	280	Replica Factory (2T Monobloc Caliper)	2013	2014	325			173	
TXT	280	Racing (2T Monobloc Caliper)	2014	2019	325			173	
	280	Pampera	2004	2004	122			143	
EC	300		1996	1999	031			023	
EC	300	(2T)	2000	2008	041			003	
EC	300		2010	2015	041			187	
EC	300	F (4T)	2013	2015	041			187	
EC	300	(Euro 4)	2018	2020	041			187	
EC	300	Ranger	2018	2020	041			187	
HP	300	Quad RV	2003	2006	031	031		031	
HP	300	Wild	2003	2006	031	031		031	
MX	300		1999	2000	041			003	
TXT	300	(TXT PRO)	2004	2011	168, 198			173	
TXT	300	(For models with AJP Caliper with 2 pin pad fixing)	2012	2014	168, 198			173	
TXT	300	(For models with Formula front caliper/ single pin pad fixing)	2012	2014	307			173	
TXT	300	Replica Factory (2T Monobloc Caliper)	2013	2014	325			173	
TXT	300	Racing (2T Monobloc Caliper)	2014	2019	325			173	
XC	300	(Euro 4)	2018	2020	041			187	
JTX	320		1995	1998	121			121	
TX	320		1998	1998	121			121	
	320	Pampera	1998	1999	121			121	
TXT	321		1999	2003	143			143	
GT	327	Contact	1993	1995	121		121	121	
JTR	370		1996	1997	121			121	
	370	Pampera	1996	1997	121			121	
SM	400	FSE (2T)	2001	2002	064			003	
SM	400	FSE (2T)	2003	2004	064				
	400	Enforcer four 2 Quad	1999	1999	023				
	400	Pampera	2006	2006	031			003	
EC	450	FSE Enduro (4T)	2005	2009	041			003	
EC	450	FSR Enduro (4T)	2005	2009	041			003	
EC	450	F (All Models /4T)	2013	2015	041			187	
EC	450	Raid	2014	2014	041			187	
FSR	450	Supermoto	2007	2009	064				
HP	450	Quad	2004	2009	031	031		031	
SM	450	FSR (4T) Supermotard	2007	2009	064			003	
SM	450	Halley	2009	2009	041			003	
SM	450	Trail Halley	2009	2009	041			003	
	450	Pampera (4T)	2007	2008	041			003	
	501	Enforcer four 2 Quad	1999	1999	023				
EC	515	FSE Enduro (4T)	2005	2009	041			003	
EC	515	FSR Enduro (4T)	2005	2009	041			003	
HP	515	Wild (Quad)	2009	2009	031	031		031	
SM	515	FSR (4T) Supermotard	2007	2009	064			003	
	600	Enforcer four 2 Quad	1999	1999	023				
TXE		Electric Bike	2020	2020	143			173	
TXT-E		(Full Size Electric Bike)	2012	2014	168, 198			173	
		Contact Models	1993	1995	121			121	
		GENERIC							
GT	50	Race Explorer	2009	2009	136				
SM	50	Mini Trigger	2008	2009	250			250	
X	50	Mini Trigger	2008	2009	250			250	
XOR	50		2005	2014	136				
	50	Classic	2017	2018	011				
	50	Cracker (2T/4T)	2009	2018	136				
	50	Demonio	2017	2018	394			047	
	50	Epico (2T)	2010	2016	047				
	50	Epico Electric	2012	2013	136				
	50	Evolution (2T)	2010	2011	136				
	50	Ideo	2005	2005	136				
	50	Jump (2T)	2012	2018	047				
	50	Onyx (2T/4T)	2010	2018	098, 107				
	50	Pandora (2T/4T)	2013	2018	098, 107				
	50	Race 2 (2T/4T)	2010	2014	136				
	50	Roc	2008	2011	136				
	50	Sirion (2T/4T)	2012	2018	136				
	50	Stroke	2008	2008	136				
	50	Toxic	2007	2008	122			096	
	50	Toxic Sport (2T)	2012	2018	136				
	50	Trigger SM (All models)	2006	2018	122			096	
	50	Trigger X (All Models)	2006	2018	122			096	
	50	Vendetta (2T)	2012	2013	174				
	50	Vertigo (4T)	2012	2014	011				
	110	Madison (4T)	2013	2014	011				
	110	Venos (4T)	2013	2014	011				
	125	Race 2 GT (4T)	2018	2018	394			047	
GRS	125		2013	2016	361			096	

Type	ccm		from	to	FL	FR	RL	RR	P
GRS	125		2017	2020	394			150	
TR	125	SM (4T)	2012	2016	334			150	
TR	125	SM (4T)	2017	2018	394			150	
TR	125	X	2017	2018	394			150	
TW	125	SM	2013	2015	022			096	
TW	125	SM	2017	2018	394			150	
XOR	125		2005	2011	136				
	125	Classic	2017	2018	394			287	
	125	Code (4T)	2017	2020	394			332	
	125	Code S (4T)	2012	2016	361			150	
	125	Code X (4T)	2012	2016	361			150	
	125	Demonio	2017	2018	394			047	
	125	Inox (2T)	2012	2014	334				
	125	Race 2 (4T)	2010	2014	136				
	125	Sirion (4T/Rear Drum Model)	2012	2018	136				
	125	Sirion (Rear Disc Model) (4T)	2018	2020	394			047	
	125	Soho	2006	2015	136				
	125	Stroke	2008	2008	136				
	125	Trigger SM	2008	2009	122			096	
	125	Trigger X	2008	2009	122			096	
	125	Vertigo	2013	2018	011				
	125	Vertigo (4T)	2012	2014	037				
	125	Worx (4T)	2012	2016	332			150	
	125	Zion (Rear drum model)	2008	2010	334				
	125	Zion (Rear Disc model)	2011	2016	334			334	
	150	Code S (4T)	2012	2016	361			150	
	150	Code X (4T)	2012	2016	361			150	
	150	Soho	2006	2015	136				
	150	Worx (4T)	2012	2016	332			150	
	150	Zion (Rear drum model)	2008	2010	334				
	150	Zion (Rear Disc Model)	2011	2016	334			334	
	200	Code S (4T)	2012	2016	361			150	
	200	Code X (4T)	2012	2016	361			150	
GRS	600		2013	2014	177			152	
TTX		(Electric)	2016	2018	011			011	
		Vionis (Electric)	2018	2018	011			011	
		GILERA							
		Cougar	2000	2001	122				
		Nordwest	1994	1994	019			038	
		Nordwest	1995	1996	019				
503	50	cc	1991	1991	120			120	
DNA	50	(Grimeca Caliper)	2001	2006	122			137	
DNA	50	(Heng Tong Caliper)	2001	2005	293			137	
GSM	50		1999	2003	121			121	
H@K	50		2001	2002	121			121	
R1/	50		1990	1990	083				
RC	50	Top Rally	1990	1990	094			094	
RCR	50	Enduro	2003	2006	121			121	
RK	50	Cannibal	1996	1998	121			121	
RV	50	NGR	1988	1988	096			038	
SKP	50		1999	2001	098, 107			137	
SMT	50		2007	2007	121			121	
SMT	50	Supermotard	2003	2006	121			121	
	50	Built	1990	1990	120				
	50	DD/SP Runner SP/Pujeret	1999	2004	098, 107			137	
	50	Eaglet	1996	1996	120			094	
	50	Easy Moving	1995	1996	098, 107				
	50	Ice	2001	2003	098, 107				
	50	Rally	1987	1987	083				
	50	Runner	1998	1998	098, 107				
	50	Runner PJ/SP	2006	2014	293			137	
	50	Stalker	1997	2006	098, 107			137	
	50	Stalker	2003	2011	042				
	50	Storm	1994	1995	098, 107				
	50	Zulu	2001	2001	121			121	
	80	TG 1/2/3			184				
DNA	125		2001	2003	122			186	
DNA	125	(Heng Tong Caliper)	2001	2003	293			186	
FX	125	Runner (Rear drum brake Model / Grimeca front caliper)	1997	2002	122				
FX	125	Runner (Rear drum brake Model / Heng Tong front caliper)	1997	2002	293				
FXR	125	Runner (Rear drum brake Model / Grimeca front caliper)	1997	2002	122				
FXR	125	Runner (Rear drum brake Model / Heng Tong front caliper)	1999	2002	293				
GFR	125		1994	1994	019			038	
RC	125	Rally	1987	1988	010				
RC	125	Top Rally	1989	1992	006			018	
RX	125		1984	1984	038				
RX	125	Arizona	1988	1988	038				
SC	125		2006	2007	233			121	
VX	125	4T (Grimeca Caliper)	2001	2004	293			186	
VX	125	Runner / ST (4T)	2005	2014	293			186	

Type	ccm		from	to	FL	FR	RL	RR	P
VXR	125	Runner 4 Stroke (Grimeca Caliper)	2001	2004	122			186	
	125	Apache	1991	1991	006			018	
	125	Cougar	1999	2002	010				
	125	CX	1991	1991	019			038	
	125	GR1			184				
	125	HX LE	1983	1983	038				
	125	MX1/MRX	1989	1989	019			038	
	125	Nexus	2007	2012	293			293	
	125	SP 01/ SP 02	1989	1989	019			038	
	125	TG 1/2/3			184				
	125	Typhoon	1995	1998	098, 107				
	125	Typhoon X-XR	1999	2000	098, 107				
	125	XR1/XR2	1989	1989	010			038	
DNA	180		2001	2003	122			186	
DNA	180	(Heng Tong Caliper)	2001	2003	293			186	
FX	180	Runner (Rear drum brake model/ Grimeca front caliper)	1997	2002	122				
FX	180	Runner (Rear drum brake model/Heng Tong front caliper)	1997	2002	293				
FXR	180	Runner (Rear drum brake model/ Grimeca Front Caliper)	1997	2002	122				
FXR	180	Runner (Rear Drum brake model/Heng Tong front caliper)	1997	2002	293				
VX	180	4T (Heng Tong Caliper)	2001	2004	293			186	
VXR	180	Runner 4 Stroke (Grimeca Caliper)	2001	2004	122			186	
ER	200		1987	1987	010				
RTX	200		1985	1985	010				
RV	200		1985	1986				038	
RV	200	ES	1987	1987	010			038	
RX	200	/Arizona/Enduro	1985	1985	038				
VX	200	Runner/ST (4T) (6 bolt rear disc) (Heng Tong Caliper)	2005	2011	293			186	
VXR	200	Runner (4T) (6 Bolt rear disc) (Grimeca Caliper)	2002	2004	122			186	
VXR	200	Runner (4T) (6 Bolt Rear Disc) (Heng Tong Caliper)	2002	2004	293			186	
	200	Arizona Hawk	1985	1985	010				
	200	Fast Bike	1987	1987	010			038	
	200	T4/T4 C/T4 S			184				
HX	250	LC	1983	1983	038				
NGR	250		1985	1985	096	096		038	
RC	250	Rally	1987	1987	010			038	
RX	250	Arizona Rally	1986	1986	038				
	250	Nexus ie	2007	2008	293			293	
	250	Oregon Quad	2007	2007	018			140	
	300	Nexus i	2008	2012	293			293	
ER	350		1987	1987	010				
XRT	350		1990	1990	010			038	
	350	Dakota	1985	1985	010				
	350	Saturno Bialbero	1990	1990	064				
	500	Dakota	1987	1987	010				
	500	Fuoco LT (4V/4T)	2013	2015	137	137		293	303
	500	Fuoco RC/ie	2007	2013	137	137		293	303
	500	Nexus	2003	2012	031	031		152	
	500	Saturno S/Bialbero/Piuma	1990	1990	064			038	
RC	600		1989	1990	006			018	
XRT	600		1988	1988	010			038	
GP	800	(Chain Drive)	2008	2014	031	031	293	293	303
		GMA							
		2 Piston (Small) Caliper Model B (CCI # 09-996)			184				
		2 Piston Rear (Large) Caliper mode A (CCI # 09-997)						076	
		4 Piston model F			121				
		GOCCIA (ELECTRIC SCOOTERS)							
GO		T 1-4	2013	2014	098, 107				
		E-Gora (Li/Si)	2012	2015	011				
		Sunday	2012	2015	161				
		GOES							
G	50	RT (Scooter)	2013	2014	136				
G	50	X	2008	2009	095			095	
	50	Slam (Scooter)	2010	2012	136				
G	55	R Scooter	2008	2014	011				
G	90	XS	2010	2013				042, 047	
G	125	M	2008	2014	011			332	
G	125	RT Retro (Scooter)	2010	2012	136				
G	125	X	2008	2009	011			011	
G	125	XM	2008	2009	041			003	
SP	125	R (Motorcycle)	2010	2012	011			332	
	125	Wiki (Scooter)	2010	2012	136				
	220	UTS (Side x Side)	2013	2014	284	284			
G	225	S	2012	2013	042			005	
G	250	XM	2008	2009	041			003	
G	350	S (Quad)	2008	2014	047	047		005	
	360	Max (Quad)	2008	2014	284	284			
G	520	F (Quad)	2007	2014	284	284		281	
G	520	UTX (Side x Side)	2010	2011	009	002		281	
	520	Max (Quad)	2007	2014	284	284		281	

Type	ccm		from	to	FL	FR	RL	RR	P
G	525	(4x4)	2012	2013	284	284		281	
G	525	Max (4x4)	2012	2013	284	284		281	
G	625	i (4x4)	2012	2014	284	284		281	
G	625	i (4x4) Max	2012	2014	284	284		281	
G	625	i (All models)	2012	2012	284	284		281	
G	625	i UTX (4x4) (Side x Side)	2012	2014	284	284		281	
G		E-SSV Electric (Side x Side)	2012	2013	284	284		281	
		GOGORO							
		Smart Scooter (Electric)	2015	2017	152			005	
		GOLDFREN							
		CP005 4 Piston monoblock caliper	2011		301				
		Rear motocross caliper CP004	2007					187	
		Front motocross caliper CP006, CP016			041				
		GOVECS (ELECTRIC SCOOTERS)							
GO		S 1-2	2011	2014	098, 107			047	
GO		S 1-4	2011	2014	098, 107			047	
GO		S 2-4	2011	2014	098, 107			047	
GO		S 3-4	2011	2014	098, 107			047	
GO		T 1-2	2011	2014	098, 107			047	
GO		T 1-4	2013	2014	098, 107			047	
GO		T 2-4	2011	2014	098, 107			047	
GO		T 3-4	2011	2014	098, 107			047	
		HAMMERHEAD BUGGIES							
	80	T	2008	2009				288	
ES	150	S Supersport 11 R	2008	2009	288	288		283	
		HANWAY							
SM	50	Furious			344				
		HAO-QING							
	125	2C	2002	2002	289				
		HARLEY DAVIDSON							
		Livewire (Electric)	2018	2020	328	328		152	
		Most Models (Check Application listings for details)	2003	2011	181			181	
XG	500	Street (549cc X-Engine)	2014	2015	349			349	
XG	500	Street (300mm Discs)	2016	2020	106			031	
XG	750	Street (749cc X-Engine)	2014	2015	349			349	
XG	750	Street (300mm Discs)	2016	2020	106			031	
XL	883	C Sportster Custom	2004	2010	272	272		274	
XL	883	L Low	2004	2010	272			274	
XL	883	L Superlow	2011	2013	272			274	
XL	883	L Super Low (Cast Wheels)	2014	2020	359	359		148	
XL	883	N Iron	2009	2010	272	272		274	
XL	883	N Iron (Cast wheels)	2014	2015	359	359		148	
XL	883	N Iron	2016	2020	359	359		148	
XL	883	R 100th Anniversary Edition	2003	2003	181	181		181	
XL	883	R Roadster	2010	2013	272	272		274	
XL	883	R Roadster (Cast wheels)	2014	2015	359	359		148	
XL	883	R Sportster R	2005	2013	272	272		274	
XL	883	Sportster Custom	1988	1999	181	181		056	
XL	883	Sportster STD	2004	2008	272			274	
XL53c	883	Sportster Custom	2000	2003	181			181	
XLH	883		1979	1983	059			062	
XLH	883	r Sportster Flat Track	2000	2003	181			181	
XLH	883	Sportster	2000	2003	181			181	
XLH	883	Sportster (XL2/C560/1)	1985	1986	057			058	
XLH	883	Sportster (XL2/C560/1)	1987	1989	057			056	
XLH	883	Sportster (XL2/C560/1)	1990	1999	057			056	
XLH	883	Sportster Hugger	2000	2003	181			181	
XL	1000		1979	1983	059			062	
XLH	1000	Sportster	1979	1981	059	059		062	
XLH	1000	Sportster	1983	1985	059	059		058	
XLCH	1000		1973	1978				062	
XLCH	1000		1979	1983	059			062	
XLS	1000	Anniversary	1982	1982	059	059		058	
XLS	1000	Roadster	1979	1982	059	059		062	
XLS	1000	Sportster	1983	1983	059	059		058	
XLX	1000	61	1984	1985	059				
XLX	1000		1979	1983	059	059		058	
XR	1000		1985	1985	059	059		058	
XLH	1100		1986	1986	057			058	
XLH	1100	(XL2/C560/1)	1987	1988	057			056	
XLH	1100	Sportster (XL2/C560/1)	1985	1986	057			058	
VR-SCAW	1130	V-Rod	2007	2007	271	271		271	
VRSCB	1130	V-Rod	2004	2005	181	181		181	
VRSCD	1130	Night Rod (Cast Wheel)	2006	2008	271	271		271	
VRSCR	1130	Street Rod	2006	2007	271	271		271	
VRSCX	1130	V-Rod	2007	2007	271	271		271	
FL	1200		1972	1984	060			060	
FLH	1200		1980	1980	060			061	
FLH	1200	Anniversary	1978	1978	060			060	
FLH	1200	Touring	1977	1978	060			060	

Type	ccm		from	to	FL	FR	RL	RR	P
FX	1200		1978	1983	059			060	
FXE	1200		1973	1980	059			060	
FXS	1200		1978	1979	059			060	
XL	1200	C Custom (Spoke Wheels)	2014	2020	359	359		148	
XL	1200	C Custom Ltd (Spoke Wheel)	2014	2020	359	359		148	
XL	1200	C Sportster Custom	2000	2003	181			181	
XL	1200	C Sportster Custom	2004	2013	272	272		274	
XL	1200	CX Roadster	2016	2020	359	359		148	
XL	1200	Forty Eight Anniversary	2018	2018	359	359		148	
XL	1200	L Sportster Low (Cast Wheel)	2007	2011	272	272		274	
XL	1200	L Sportster Low (Spoke Wheel)	2007	2011	272	272		274	
XL	1200	N Nightster (Spoke Wheel)	2008	2012	272	272		274	
XL	1200	NS Iron	2018	2018	359	359		148	
XL	1200	R Sportster Roadster	2004	2008	272	272		274	
XL	1200	S Sportster Sport	2000	2003	181	181		181	
XL	1200	T Superlow	2014	2020	359	359		148	
XL	1200	V Seventy Two	2012	2013	272	272		274	
XL	1200	V Seventy-Two	2014	2016	359	359		148	
XL	1200	X Forty Eight	2010	2013	272	272		274	
XL	1200	X Forty Eight	2014	2018	359	359		148	
XL	1200	XS Forty Eight Special	2018	2018	359	359		148	
XLH	1200	Sportster (XL2/C560/1)	1990	1999	057			056	
XR	1200		2008	2010	279	279		274	
XR	1200	X	2010	2013	279	279		274	
VRSC	1250	10th Anniversary V-Rod	2012	2012	271	271		271	
VR-SCAW	1250	V-Rod (Spoke Wheel)	2008	2010	271	271		271	
VR-SCDX	1250	Night Rod Special (Cast Wheel)	2007	2017	271	271		271	
VRSCF	1250	V-Rod Muscle	2009	2017	271	271		271	
FLH	1340	80	1978	1980	060			060	
FLH	1340	Classic	1982	1983	062	062		061	
FLH	1340	Electra Glide	1982	1983	062	062		060	
FLH	1340	Electra Glide Spec.	1984	1990	060				
FLH	1340	Heritage	1981	1983	062	062		061	
FLHR	1340		1994	1999	057	057		063	
FLHT	1340	Electra Glide (FLT/C559/1)	1985	1986	057	057		058	
FLHT	1340	Electra Glide Classic (FLT/C559/1)	1987	1990	057	057		063	
FLHTC	1340	Electra Glide Classic	1985	1986	057	057		058	
FLHTC	1340	Electra Glide Classic (FLT/C559/1)	1990	1999	057	057		063	
FLHTC	1340	Ultra Classic (FLT/C559/1)	1990	1999	057	057		063	
FLHT-CUL	1340	Electra Glide Ultra Classic LOW	2015	2015	271	271		271	
FLST	1340	Heritage Softail	1986	1987	057			058	
FLST	1340	Heritage Softail	1988	1999	057			056	
FLSTC	1340	Heritage Softail Cl.	1990	1999	057			056	
FLSTF	1340	Fat Boy	1990	1999	057			056	
FLSTN	1340	Heritage Softail Nost.	1993	1999	057	057		056	
FLT	1340	80	1980	1981	062	062		061	
FLT	1340	(FLT/C559/0)	1984	1985	057	057		061	
FLT	1340	80 Classic	1981	1983	062	062		061	
FLT	1340	Classic	1982	1983	062	062		061	
FLT	1340	Tour Glide	1982	1982	062	062		061	
FLTC	1340	Tour Glide Classic	1985	1986	057			058	
FLTH	1340	Tour Glide	1984	1984	059	059		061	
FLTRXS	1340	Road Glide Special	2015	2017	271	271		271	
FXB	1340	80	1980	1981	059			060	
FXB	1340	Sturgis	1982	1982	059	059		060	
FXDL	1340	Dyna Low Rider	1993	1999	057	057		056	
FXDW	1340	Dyna Wide Glide	1993	1993	057				
FXDWG	1340	Dyna Wide Glide	1993	1999	057	057		056	
FXE	1340	80	1978	1983	059			060	
FXE	1340		1980	1981	059			060	
FXE	1340		1982	1983	059				
FXE	1340	(FX/C315/0)	1985	1986	058			058	
FXE	1340	Super Glide	1983	1984	059	059			
FXEF	1340	80 Fat Bob	1979	1981	059			060	
FXLR	1340	Low Rider Custom	1993	1999	057	057		056	
FXLR	1340	Low Rider Custom (FXR/C456/1)	1987	1988	057	057		056	
FXR	1340		1978	1981	059				
FXR	1340	(FXR/C456/1)	1987	1988	057			056	
FXR	1340	Super Glide	1981	1983	059			058	
FXR	1340	Super Glide (-/C456/1)	1990	1999	057	057		056	
FXR	1340	Super Glide (FXR/C456/0)	1985	1986	057	057		056	
FXRD	1340	Super Glide GTE	1985	1986	057	057		058	
FXRS	1340	Low Glide	1982	1992	059	059		058	
FXRS	1340	Low Glide	1984	1991	059				
FXRS	1340	Low Rider (FXR/C456/0)	1985	1986	057	057		058	
FXRS	1340	Low Rider Sport (FXR/C456/1)	1987	1999	057			056	
FXRS	1340	Low Rider Sport Ed. (-/C456/1)	1990	1999	057	057		056	
FXRS	1340	Low Rider, Convert. (-/C456/1)	1990	1999	057	057		056	
FXRS	1340	Super Glide	1988	1999	057	057		056	
FXRS	1340	Super Glide II	1982	1983	059	059		058	
FXRT	1340	Super Glide (-/C456/1)	1990	1999	057	057		056	
FXRT	1340	Super Glide (FXR/C456/0)	1985	1986	057	057		058	
FXRT	1340	Super Glide II	1983	1992				058	
FXS	1340	80	1977	1982				060	

Type	ccm		from	to	FL	FR	RL	RR	P
FXS	1340		1980	1981	059			060	
FXS	1340	Low Rider	1982	1982	059	059		060	
FXSB	1340	Low Rider (FXB/C318)	1983	1985	059	059		058	
FXST	1340		1994	1994	057			056	
FXST	1340	Softail (FXST/D312/0)	1984	1986	057			058	
FXSTC	1340	Softail Custom	1986	1987	057			058	
FXSTC	1340	Softail Custom (FXST/D312/0)	1985	1986	057			058	
FXSTC	1340	Softail Custom (FXST/D312/0)	1988	1999	057			056	
FXSTS	1340	Softail Springer	1996	1996	057			056	
FXSTS	1340	Softail Springer (-/D312/0)	1990	1991	057			056	
FXWG	1340	80	1980	1981	059			060	
FXWG	1340	Wide Glide	1983	1985	059	059		058	
FLHR	1450	Road King	2000	2007	181	181		181	
FLHRCi	1450	Road King Classic	2000	2007	181	181		181	
FLHRI	1450	Road King	2000	2004	181	181		181	
FLHRSI	1450	Road King Custom	2004	2004	181			181	
FLHT	1450	Electra Glide Standard	2000	2004	181	181		181	
FLHTC	1450	Electra Glide Classic	2000	2004	181	181		181	
FLHTCUI	1450	Ultra Classic Electra Glide	2000	2004	181	181		181	
FLSTC	1450	Heritage Softtail Classic	2000	2004	181			181	
FLSTF	1450	Fat Boy	2000	2004	181			181	
FLSTS	1450	Heritage Springer	2000	2003	057			181	
FLSTSCi	1450	Springer Classic	2005	2005				181	
FLTR	1450	Road Glide	2000	2004	181	181		181	
FXD	1450	Dyna Super Glide	2000	2003	181			181	
FXDi	1450	Super Glide	2005	2005	181			181	
FXDi	1450	Super Glide Sport	2005	2005	181			181	
FXDL	1450	Dyna Low Rider	2000	2003	181	181		181	
FXDLi	1450	Low Rider	2004	2005	181			181	
FXDS	1450	Dyna Convertible	2000	2002	181	181		181	
FXDWG	1450	Dyna Wide Glide	2000	2003	181			181	
FXDX	1450	Dyna Super Glide Sport	2000	2004	181	181		181	
FXST	1450	Softail Standard	2000	2005	181			181	
FXSTB	1450	Night Train	2000	2004	181			181	
FXSTD	1450	Softtail Deuce	2000	2004	181			181	
FXSTS	1450	Springer Softtail	2000	2004	057			181	
FLHR	1584	Road King (Spoke Wheel Type)	2008	2016	271	271		271	
FLHRC	1584	Road King Classic	2007	2007	181	181			
FLHRC	1584	Road King Classic	2008	2020	271	271		271	
FLHRS	1584	Road King Custom	2007	2007	181	181			
FLHT	1584	Electra Glide Standard	2007	2007	181	181			
FLHT	1584	Electra Glide Standard	2008	2010	271	271		271	
FLHTC	1584	Electra Glide Classic	2007	2007	181	181			
FLHTC	1584	Electra Glide Classic	2008	2011	271	271		271	
FLHTCU	1584	Ultra Electra Glide Classic	2008	2010	271	271		271	
FLHTK	1584	Electra Glide Ultra LTD	2010	2013	271	271		271	
FLHX	1584	Street Glide	2006	2007	181	181		271	
FLHX	1584	Street Glide	2008	2013	271	271		271	
FLSTC	1584	Heritage Softail Classic	2007	2007	181			181	
FLSTC	1584	Heritage Softail Classic	2008	2014	275			273	
FLSTF	1584	Fat Boy	2007	2007	181	181		244	
FLSTF	1584	Fat Boy	2008	2011	275			273	
FLSTFB	1584	Fat boy LO	2015	2017	279			273	
FLSTFB	1584	Fat Boy LO Softail	2010	2014	275			273	
FLSTFB	1584	Fat Boy Special	2010	2013	275			273	
FLSTN	1584	Softail Deluxe	2005	2007	181	181		181	
FLSTN	1584	Softail Deluxe	2008	2014	275			273	
FLSTSB	1584	Softail Cross Bones	2008	2011	057			273	
FLTR	1584	Road Glide	2008	2009	271	271		271	
FLTRU	1584	Road Glide Ultra	2011	2012	271	271		271	
FLTRX	1584	Road Glide Custom	2010	2012	271	271		271	
FXCW	1584	Rocker	2008	2009	275			273	
FXCWC	1584	Rocker C	2008	2011	275			273	
FXD	1584	Super Glide (Cast Wheel)	2008	2010	275			273	
FXDBi	1584	Dyna Street Bob	2006	2007	181	181		181	
FXDC	1584	Dyna Super Glide Custom	2005	2005	181	181		181	
FXDC	1584	Super Glide Custom	2008	2014	275			273	
FXDF	1584	Fat Bob (Cast Wheels)	2008	2017	275	275		273	
FXDL	1584	Dyna Low Rider	2006	2006	181	181		181	
FXDL	1584	Dyna Low Rider (Cast Wheel)	2008	2013	275			273	
FXDWG	1584	Dyna Wide Glide (Spoke wheels)	2008	2020	275			273	
FXST	1584	Softail Standard	2006	2007	181	181		244	
FXST	1584	Softail Standard	2008	2014	275			273	
FXSTB	1584	Night Train Softail	2006	2007	181	181		244	
FXSTB	1584	Night Train (Spoke Wheel)	2008	2009	275			273	
FXSTC	1584	Softail Custom	2007	2007	181	181		244	
FXSTC	1584	Softail Custom (Spoke Wheel)	2008	2010	275			273	
FXSTD	1584	Softail Deuce	2007	2007	181	181			
FXWG	1584	Dyna Wide Glide	2007	2007	181	181			
FLD	1690	Switchback	2012	2016	275			273	
FLHR	1690	Road King (Cast wheel type)	2015	2020	271	271		271	
FLHTC	1690	Electra Glide Classic	2011	2016	275				
FLHTCU	1690	Ultra Classic Electra Glide	2011	2016	271	271		271	
FLHT-CUTG	1690	Tri Glide Ultra Classic Trike	2009	2013	271	271	354	354	
FLHT-CUTG	1690	Trike Tri Glide Ultra	2014	2020	352	352		353	
FLHX	1690	Street Glide	2014	2020	271	271		271	
FLHXS	1690	Street Glide Special	2017	2020	271	271		271	
FLHXXX	1690	Street Glide Trike	2010	2011	271	271	354	354	
FLRT	1690	Freewheeler Trike	2015	2020	352	352	353	353	
FLS	1690	Softail Slim	2012	2014	275			273	
FLS	1690	Softail Slim	2015	2017	279			273	
FLSTF	1690	Fat Boy	2012	2014	275			273	
FLSTF	1690	Fat Boy	2015	2017	279			273	
FLSTN	1690	Softail Deluxe	2015	2017	279			273	
FXDLS	1690	Dyna Low Rider S	2017	2017	275	275		273	
FLDE	1750	Softail Deluxe	2018	2020	279			395	
FLFB	1750	Fat Boy	2018	2020	279			395	
FLHC	1750	Heritage Classic	2018	2018	279			395	
FLHCS	1750	Heritage Classic 114 Anniv	2018	2018	279			395	
FLHRXS	1750	Road King Special	2017	2020	271	271		271	
FLHTCU	1750	Ultra Classic Electra Glide	2017	2020	271	271		271	
FLSB	1750	Sport Glide	2018	2020	279			395	
FLSL	1750	Softail Slim	2018	2018	279			395	
FLTRU	1750	Road Glide Ultra	2016	2020	271	271		271	
FLTRXS	1750	Road Glide Special	2018	2018	271	271		271	
FXBB	1750	Street Bob	2018	2020	279			395	
FXBR	1750	Breakout	2018	2020	279			395	
FXBRS	1750	Breakout 114	2018	2020	279			395	
FXBRS	1750	Breakout Anniv 114	2018	2020	279			395	
FXFB	1750	Fat Bob	2018	2020	279	279		395	
FLFBS	1750	Fat Boy 114	2018	2018	279				
FLFBS	1750	Fat Boy 114 Anniv	2018	2018	279				
FXLR	1750	Low Rider	2018	2020	279	279		395	
FLSS	1801	Softail Slim S	2016	2020	279			273	
FLST-FBS	1801	Fat Boy S	2016	2018	279			273	
FLHCS	1870	Heritage Classic 114	2018	2018	279			395	
FLHSC	1870	Heritage Classic	2018	2018	279			395	
FLHXSE	1870	CVO Street Glide	2017	2017	271			271	
FXBRS	1870	Breakout 114	2018	2020	279			395	
FXDR	1870	114	2018	2020	014	014		274	
FLHT-CUTG		Tri Glide Ultra Trike Anniversary	2018	2018	352			353	
FLHTK		Electra Glide Ultra LTD	2015	2020	271	271		271	
FLHTK		Electra Glide Ultra LTD Anniv	2018	2018	271	271		271	
FLHTK		Electra Glide Ultra LTD Shrine Edition	2018	2018	271	271		271	
FLHTKL		Ultra LTD Low	2015	2020	271	271		271	
FLSTC		Heritage Softail Classic	2015	2017	279			273	
FLT		Series (FLT/C559/1)	1988	1999	057	057		063	
FLT/H		Series	1986	1987	057	057		063	
FLTRX		Road Glide	2015	2020	271	271		271	
FXBS		Fat Bob	2018	2020	279			395	
FXD			1982	1983	059				
FXD			1987	1999				056	
FXDB		Dyna Street Bob (Spoke Wheel)	2008	2020	275	275		273	
FXDBC		Street Bob LTD	2016	2016	275			273	
FXDL			1982	1983	059			058	
FXDL		Low Rider (Cast Wheel)	2016	2014	275			273	
FXDL		Low Rider (Spoke Wheel)	2014	2017	275	275		273	
FXDWG			1982	1983	059			058	
FXLR			1982	1983	059				
FXRD			1982	1983	059				
FXRD			1987	1999				056	
FXRT			1982	1983	059				
FXS		Softail Blackline	2011	2013	275			273	
FXSB		Breakout	2013	2014	275			273	
FXSB		Softail Breakout	2015	2017	279			273	
FXST		Softail Standard	2015	2015	279			273	
VRSCA		V-Rod (Brembo Caliper)	2006	2006	271	271		271	
VRSCA/ VRSCB		V-Rod (Hayes Caliper)	2002	2005	181	181		181	
XL		50th Anniversary Sportster	2007	2007	272	272		274	
XLCH			1987	1999				056	
XLS			1987	1999				056	
XLX			1987	1999				056	
		HARRISON BILLET							
		2 Piston (1296040)			119				
		Big 4/6 Piston (1296033)						038	
		Mini 6			119				
		Slim Design			119				
		HARTFORD							
HD	125	L	2000	2004	289				
VR	125	H/X/Z	2004	2004	334			332	
VR	125	X/H Velo-Cross	2000	2003	334				
VR	125	Z Velo Sport	2000	2003	334				
HD	150	L	2000	2004	289				
VR	150	H/X/Z	2004	2004	334			332	
		HERALD							
	125	BRAT	2019		392			392	
	250	BRAT	2019		392			392	

GOLD fren

Type	ccm		from	to	FL	FR	RL	RR	P
		HERCULES							
RS	50	(687/C034/A)			159	159			
	50	Gipsy	1995	1995	098				
	50	Ultra, RS Ultra			159				
	80	Ultra AC			159				
	80	Ultra AC Chopper			159				
	80	Ultra Chopper			159				
	80	Ultra, F Ultra, RS Ultra			159				
	80	XE 9			159				
ATV	280		2007		230	230			
ATV	280	Sport	2007		230	230			
ATV	300	Sport	2007		230	230			
KX-5					159				
		Diff. Older models with Disc Brake			159				
		Silver Star Classic	1993	1993	081				
		HERO							
	50	Envoy	1999	1999	121				
	50	Nipster	2006	2006	114				
	125	Quickster	2006	2006	018				
	125	Slickster	2006	2006	011				
ZMR	230	Karizma	2011	2012	210			221	
		HERO ENVOY							
	50		1999	1999	121				
		HHI							
		4 Pistons - All Types			132				
		6 Piston - All Types			126			126	
		HIGHLAND							
MX	450		2006	2006				023	
	950	V2 Motard	2000	2004	031			023	
	950	V2 Outback	2000	2004	031			023	
		HM							
	10	Baja /10 JR&SR	1999	2007	173			173	
MX	12	/14 Baja	1999	2009	173			173	
CRE	50	Six/Baja/Derapage (Brembo Caliper / Kayaba Forks)	1995	2002	006			018, 038, 094	
CRE	50	Six/Baja/Derapage (Grimeca caliper)	1995	2002	094			018, 038, 094	
CRE	50	Six/Baja/Derapage Brembo caliper / 41mm Paioli Forks	1995	2002	122			018, 038, 094	
CRE	50	Baja/Derapage	2001	2002	122			121	
CRE	50	Baja/Six/Derapage	2003	2009	122			211	
CRE	50	Baja RR From ZEN50XACEA7700325	2007	2009	122			176	
CRE	50	Baja RR Up to ZEN50XACEA7700324	2007	2009	122			211	
CRE	50	Derapage RR From ZEN50XACEMA7700385	2007	2009	122			176	
CRE	50	Derapage RR Up to ZEN50XACMA7700384	2007	2009	122			211	
CRE	50	Six Competition	2007	2008	122			176	
CRE	50	Baja RR	2010	2012	122			176	
CRE	50	Six Competition	2010	2012	321, 366			176	
CRM	50	Derapage Competition	2007	2008	122			176	
CRM	50	Derapage Competition	2009	2012	321, 366			176	
CRE	80		1998	2002	007			003	
CR	85	R/R2	2003	2007	007			003	
CR	125	Motard	2004	2004	041			176	
CRE	125		1995	2001	041			003	
CRE	125	R Enduro	2002	2003	041			176	
CRE	125	R Supermotard	2003	2003	041			176	
CRE	125	R Enduro	2004	2006	041			176	
CRE	125	(Baja RR 2T)	2011	2011	278			176	
CRE	125	(Six Competition 2T)	2011	2011	041			176	
CRE-F	125	X	2009	2009	122			176	
CRE-F	125	X Six (4T)	2010	2011	321, 366			176	
CRM	125	R Supermoto	2007	2007	238			176	
CRM	125	(Six Competition 2T)	2010	2011	041			176	
CRM	125	(Derapage Competition 2T)	2011	2012	321, 366			176	
CRM	125	(Derapage RR 2T)	2011	2011	041			176	
CRM F	125	X (Derapage Competition 4T)	2010	2011	321, 366			176	
CRM-F	125	X	2009	2009	122			176	
CR	150	R/R2	2007	2009	007			176	
CRF	150	R	2007	2009	003			176	
CRF	230	Easy Enduro	2004	2004	041			176	
CRF	230	Easy Motard	2004	2004	041			176	
CRF	230	Easy Trail	2004	2007	041			176	
CRF	230	F Easy Trial (All Models)	2004	2007	041			176	
CRE	250		2002	2002	041			176	
CRE	250	R Enduro	2002	2006	041			176	
CRE	250	R Supermotard	2002	2003	041			176	
CRE	250	F Enduro	2004	2004	041			176	
CRE	250	R Moto	2004	2004	041			176	
CRE-F	250	R	2008	2009	041			176	
CRE-F	250	X	2008	2011	041			176	
CRF	250	F	2004	2008	041			176	
CRF	250	Motard	2004	2004	041			176	

Type	ccm		from	to	FL	FR	RL	RR	P
CRF	250	R	2008	2009	041			176	
CRM	250	X Supermoto	2007	2007	238			176	
CRE-F	290	X	2007	2007	041			176	
CRE-F	300	X	2008	2009	041			176	
CRE	450	F Enduro	2002	2004	041			176	
CRE	450	F Supermoto	2002	2003	041			176	
CRE	450	X			041			176	
CRF	450	Motard	2004	2004	041			176	
CRF	450	R	2004	2008	041			176	
CRM	450	R/X Supermoto	2007	2007	238			176	
CRE-F	490	X	2007	2007	041			176	
CRM-F	490	X Supermoto	2007	2007	238			176	
CRE-F	500	X	2008	2009	041			176	
CRM-F	500	X	2011	2011	238			176	
		HONDA							
CB	50	V/W Dream 50	1997	1998	332			003	
CRM	50	RN/RP/RR/RT	1993	1996	004				
MB	50	S	1980	1982	144				
MBX	50	SD/SF	1983	1985	011				
MG	50	S/X/1/3 Magna	1995	2003	144				
MRX	50		1988	1988	144				
NCX	50	50 E/G/J - Dunk 50	2014	2017	387				
NSC	50	AC Vision 50 (4T) MPDC/E/F/G/H/J (16" Wheels)	2012	2018	299				
NSC	50	C Vision 50 (4T) WHC/T2E/F (14" Wheels)	2012	2016	299				
NSC	50	R (14"whees)	2013	2016	299				
NSR	50	SK/SP/SR/SS	1989	1995	011				
NSR	50	FP/FR/FS	1993	1995	011				
NSR	50	RV/RW/RX/RY	1997	2000	332				
NSR	50	V (AC10-180)	1997	1997	332				
NSR	50	X (AC10-190)	1999	1999	332			071	
SFX	50	S/T/V/W/X/Y/1	1996	2004	098, 107				
SGX	50	V/W/X/Y/1 Sky/Sky Deluxe	1997	2003	098, 107				
SH	50	T Fifty/Scoopy W/X/Y/1	1997	2003	098, 107				
SJ	50	P/R/S/T/V/W/X "Bali"	1993	1999	010				
SK	50	MM-II/MM-YD/MP-II (AF28) Dio SR			110				
SK	50	MM-III/MP-III/MP-IV (AF28) Dio ZX			110				
SK	50	MMR-II/MMT-II (AF28) Dio- XR			110				
SRX	50	W/SW/X/SX	1998	1999	098, 107				
SZX	50	(X8R-S) SW/SX/SY/S1 "Supersport Scooter"	1998	2004	098, 107			131	
SZX	50	(X8R-X) XW/XX/XY/X1 "Cross Sport Scooter"	1998	2004	098, 107			131	
XR	50	M5 (AD14) Motard	2005	2005	332			003	
	50	Tact			110				
CRM	75	RK/RL/RM/RP/RR	1989	1994	004				
NSR	75	N/P/R/X/Y (NS-1/NSR80)	1992	2000	332			071	
CR	80	RG/RH/RJ/RK/RL/RM	1986	1991	007				
CR	80	RN/RP/RR/RS/RT/RBT/RV/RBV/RW/RBW/RX/RBX/RY/RBY/R1/RB1/R2/RB2	1992	2002	007			003	
MB	80	(MB8) (HC01/C029)	1980	1980	042				
MBX	80	FWDD/FWDF	1983	1986	144	144			
MCX	80	(HC05/C940)	1982	1982	042				
NSR	80	J-2/K/L/N (HC06)	1988	1992	011				
NSR	80	P/R/S (HC06)	1993	1995	332				
NSR	80	V (HC06-170)	1997	1997	332				
NSR	80	X (HC06-180)	1999	1999	332				
CR	85	R3/RB3/R4/RB4/R5/RB5/R6/RB6/R7/RB7	2003	2007	007			003	
NF	100	Astra Supra	1999	1999	332				
SH	100	T/W/X/Y/1 Scoopy	1996	2001	098, 107				
SJ	100	T/V/W/X "Bali-Ex"	1996	1999	010				
XR	100	M5 (HD13) Motard	2005	2005	332			003	
ACB	110	CBB/CSB - Vario 110	2010	2010	387				
ACC	110	SCB/SCC - ANC 110 Icon	2011	2012	387				
ACD	110	CSB/SCB - Scoopy 110 Fi	2011	2016	387				
NSC	110	WHB/E Vision 110 (14" Wheels)	2011	2016	299				
NSC	110	CSD/CSE - Spacy 110	2012	2014	387				
NSC	110	MPDC/E Vision (16" wheel)	2012	2014	299				
NSC	110	CBFF/CBFH - Dio 110	2015	2017	387				
NSC	110	MPDH Vision (16" Wheels)	2017	2018	387				
SCV	110	-8 Lead (NJX 110 WH8 - 3 bolt Disc Fixing)	2008	2009	188				
SCV	110	(NHX 110 WHA) (4 bolt lead disc fixing)	2010	2012	299				
	111	Spacy (SCR1105WHF) - Korea	2015	2015	350				
	112	Spacy (SCR1105WHF) - Turkey	2015	2015	350				
ACA	125	CBFE - Air Blade 125	2014	2016	387				
ANF	125	3/5/T5/T6/7/A Innova	2003	2011	210				
CA	125	S/T Rebel (JC24/H058)	1995	1997	334				
CA	125	V/W/X "Rebel"	1998	2000	010				
CB	125	RS	1983	1983	144				
CB	125	TDC/TDE/TDJ	1983	1989	050				
CB	125	F (GLF 125 1WHF)	2015	2016	332				
CB	125	F	2017	2020	398			311	
CB	125	F (GLR 125 1WHH)	2017	2018	398				
CB	125	R	2018	2020	379			311	

Type	ccm		from	to	FL	FR	RL	RR	P
CBF	125	6 Stunner	2006	2006	381				
CBF	125	M7 Stunner	2007	2007	381				
CBF	125	M9/MA/MB/MD/ME	2009	2015	210				
CBR	125	R4/R5/RS5/RS6	2004	2006	210			221	
CBR	125	R4/R5/RS5/RW5/RW6/RW7/RW8/RW9/ RWA (6 Bolt Front Disc / Canada)	2004	2010	210			221	
CBR	125	RW7/RW8/RW9/RWA (6 Bolt Front disc fixing)	2007	2010	210			221	
CBR	125	RWB/RC/RD/RF/RG (5 Bolt Front Disc)	2011	2016	210			311	
CBX	125	TS Custom	1982	1982	144				
CBX	125	F	1984	1984	050				
CBX	125	Custom	1988	1988	011				
CG	125	ES4-ES8	2004	2008	144				
CLR	125	W "City Fly"	1999	2003	010				
CR	125	RE/RF	1984	1985	102				
CR	125	RG	1986	1986	102				
CR	125	RH/RJ/RK/RL/RM/RN/RP/RR	1987	1994	004			003	
CR	125	RS/RT/RV/RW/RX/RY/R1	1995	2001	041			003	
CR	125	R2	2002	2002	041			176	
CR	125	R3/R4/R5/R6/R7	2003	2007	041			176	
CRF	125	F Small wheel (FR17"/RR 14" Wheels)	2014	2020	041				
CRF	125	FB Big wheel (FR19"/RR 16" Wheels)	2014	2020	041				
CRM	125	RL/RM/RN/RP/RR/RV/RX (JD10)	1990	1999	010			087	
FES	125	W/Y/1/2 Pantheon	1998	2002	135				
FES	125	3/4/5 Pantheon	2003	2006	135			020	
FES	125	7/9/A S-Wing (Non ABS Model)	2007	2013	257			287	
FES	125	A7/A9/AA S-Wing (ABS Model)	2007	2015	257			287	
FS	125	Sonic	2003	2004	011			210	
CH	125	F/G Spacy	1985	1986	103				
LS	125	RY	2000	2000	011			332	
MBX	125	FE	1984	1986	011				
MSX	125	D/E/F/G/H Grom (Non ABS)	2013	2020	210			311	
MSX	125	AG/AH Grom (ABS)	2018	2020	210			311	
NES	125	Y/1/2/3/4/5/6 (@ 125 Scooter)	2000	2006	188				
NS	125	FG/FH/RH	1986	1987	010				
NSR	125	FJ/FK/FL/FM/FN	1988	1992	010			087	
NSR	125	RK/RL/RM/RN/RR/RS/RV/RW/RX/RY/R1	1989	2001	010			087	
NSS	125	Forza (2 piston caliper)	2015	2018	014			287	
NX	125	K/S/F Transcity	1989	1997	010				
PCX	125	(WW 125 EX2 C/D/F/H/J)	2012	2018	299				
PCX	125		2018	2020	396				
PES	125	6/7/8/9/A (PS 125)	2006	2009	188				
PES	125	R8/R9/RA (PS 125) ABS	2008	2009	188				
RS	125	/250	1988	1989	051			161	
RS	125	R	1990	1994	014			161	
RS	125	(Rad.cal.)	2004	2007	207			161	
SES	125	2/3/4 Dylan	2002	2007	188				
SH	125	1/3 (Carb/Rear Drum Model)	2001	2003	188				
SH	125	i 4/5/6/7/8/R8/S7/D9 (Fuel Injection/ Rear Drum Model)	2004	2009	188				
SH	125	i 9/A/B (Fuel Injection/Rear Disc Model)	2009	2012	257			287	
SH	125	i RA (Fuel Injection/rear disc model)	2010	2014	257			287	
SH	125	i (2 piston caliper/ABS)	2014	2018	014			287	
SH	125	i (3 Piston Caliper/ABS)	2014	2016	257			287	
SH	125	i Mode (ANC 125E)	2014	2018	299				
VT	125	CX/CY/C1/C21/C2Y/C3/C4/C7/C8 Shadow	1999	2008	332				
XL	125	L Paris-Dakar	1985	1985	010				
XL	125	RF/RH	1985	1986	102				
XL	125	V1-VA "Varadero"	2001	2016	332			221	
XLR	125	RW	1998	2001	041				
XR	125	L3/L4/L5/L6/L7/L8	2003	2008	041				
Z	125	Monkey M AC	2018	2020	210			221	
	125	Elite (CHA1253WHE) - Argentina	2014	2014	350				
	125	Elite (CHA1253WHE) - Colombia	2014	2014	350				
	125	Elite (CHA1253WHE) - General Export KM/H	2014	2014	350				
	125	Elite (CHA1253WHE) - Latin America	2014	2014	350				
	125	Elite (CHA1253WHE) - South Africa	2014	2014	350				
	125	Super Cub C (ABS)	2018	2020	336				
	125	Super Cub C (ABS) 007	2018	2020	336				
CBF	150	5	2005	2005	381				
CBF	150	M5 Unicorn	2005	2005	381				
CBF	150	6 (Spoke Wheels)	2006	2006	381				
CBF	150	M6/M7 Unicorn (Spoke Wheels)	2006	2007	381				
CBF	150	M7/M9/MA Unicorn (Cast Wheels)	2007	2010	381				
CBF	150	MB/MC Unicorn (Cast Wheels)	2011	2012	381			311	
CBR	150	R	2000	2003	210			221	
CG	150	ESD Titan	2004	2005	144				
CG	150	KS/ES Titan	2004	2005	144				
CRF	150	F3/F4/F5/F6/F7/F8/F9	2003	2020	041			176	
CRF	150	R Small wheel (FR 17"/RR 14")	2007	2020	007			176	
CRF	150	RB Big wheel (FR 19"/RR 16")	2007	2020	007			176	
FES	150	W/Y/1/2 Pantheon	1998	2002	135				
FES	150	3/4/5 Phantom	2003	2006	135			020	
FES	150	7/9/A S-Wing	2007	2013	257			287	
FES	150	S-Wing A7/A9/AA (ABS Model)	2007	2013	257			287	
NES	150	Y/1/2/3/4/5/6 "@150 Scooter"	2001	2006	188				

Type	ccm		from	to	FL	FR	RL	RR	P
NSR	150	RR (Malaysian Market)	2002	2005	332			332	
PCX	150	(WW 150 EX2 C/D/F/H/J)	2012	2020	299				
PCX	150	(ABS)	2018	2020	299				
PES	150	6/7/8/9/A (PS150)	2006	2010	188				
PES	150	R8/R9/RA ABS	2008	2011	188				
SES	150	2/3/4 Dylan	2002	2006	188				
SH	150	1/3 (Carb/Rear Drum Model)	2001	2003	188				
SH	150	i 4/5/6/7/S7/S8/R8/D9 (Fuel Injection/ Rear Drum Model)	2004	2009	188				
SH	150	i 9/A/B (Fuel Injection/Rear Disc Model)	2009	2012	257			287	
SH	150	RA (Fuel Injection/rear disc model)	2010	2014	257			287	
SH	150	i (2 piston caliper/ABS)	2014	2018	014			287	
SH	150	i (3 Piston Caliper/ABS]	2014	2016	257			287	
ATC	200	XD	1983	1983	007			007	
CBX	200	Strada	1997	2001	144				
CTX	200	/CTX 200 A bushlander	2004	2016	041				
MTX	200	RWF	1985	1985	102				
TA	200	(TA Shadow)	2002	2005	332			332	
XL	200	L	1985	1985	010				
XL	200	R	1985	1985	102				
FTR	223	(MC34) Y2/A2	2000	2002	102				
CRF	230	F AC	2004	2020	041				
CRF	230	L	2008	2010	041			003	
CRF	230	M (Supermoto)	2009	2010	041			003	
SL	230	Free Landsports (MD33)V/W/X/1	1997	2001	041			003	
ATC	250	RB	1981	1981	144				
ATC	250	RC	1982	1982	007				
ATC	250	RD	1983	1984	007			007	
ATC	250	RF/RG	1985	1986	102			102	
AX-1	250	(NX 250 J/K/R/R3)	1989	1994	004				
CB	250	T/N/NA/NB/NDB/NDC	1978	1982	068				
CB	250	RSA/RSD	1981	1984	068				
CB	250	N/T/W/X/Y/1/4 "Two Fifty"	1992	2005	014				
CB	250	FT/FV/FX/FY/F1 Hornet	1996	2001	069	069		020	
CBF	250	4/7	2004	2007	332				
CBR	250	FG/FGYA (MC14)	1986	1986	025	025			
CBR	250	RH (MC17)	1987	1987	025	025		020	
CBR	250	RJ/RK/RK2 (MC19)	1988	1989	022			020	
CBR	250	RRL/RRN/RRR (MC22)	1990	1994	022	022		020	
CBR	250	RAB/RAC (ABS)	2011	2013	257			306	
CBR	250	RB/RC (Non ABS)	2011	2013	022			306	
CBX	250		1984	1998	011				
CBX	250	RSE	1984	1984	050				
CBX	250	Twister	2004	2004	285				
CD	250	UJ	1988	1992	024				
CM	250	TB	1981	1981	068				
CMX	250	CT Rebel (Nissin Caliper)	1996	1997	334				
CMX	250	CV/CW/CX Rebel (Grimeca Caliper)	1997	2000	010				
CN	250	H/J/K/L/M/P/R/S/T/V/X SPAZIO/Helix	1987	1998	049				
CN	250	3 (MF02) Fusion/FusionX/Fusion X Special	2003	2003	014				
CR	250	RE/RF	1984	1985	102				
CR	250	RG	1986	1986	102				
CR	250	RH/RJ/RK/RL/RM	1987	1991	004			003	
CR	250	RN/RP/RR	1992	1994	004			003	
CR	250	RS/RT/RV/RW/RX/RY/R1	1995	2001	041			003	
CR	250	R2/R3/R4/R5/R6/R7	2002	2007	041			176	
CRF	250	R4/R5/R6/R7	2004	2007	041			176	
CRF	250	X	2004	2020	041			176	
CRF	250	R8/R9/RA/RB/RC/RD/RE/RF/RG	2008	2016	041			176	
CRF	250	RX	2008	2020	041			176	
CRF	250	LD/LH	2013	2020	278			311	
CRF	250	ME Supermoto	2014	2016	278			311	
CRF	250	XLR (Road Legal)	2014	2020	041			176	
CRF	250	RF/RG/RH/RJ (260mm F/Disc)	2015	2020	041			176	
CRF	250	RE (Limited Road Use)	2016	2016	041			176	
CRF	250	L (ABS)	2017	2020	278			311	
CRF	250	Rally (CRF 250 RL Rally Non ABS)	2017	2020	278			311	
CRF	250	Rally (CRF 250 RLA Rally ABS)	2017	2020	278			311	
CRM	250	R (RK) MK1/MD24 (100001-1008385)	1989	1990	004				
CRM	250	R (RM) MK2/MD24 (1200001-1211634)	1991	1992	004			003	
CRM	250	R (RP-RP-II) MK2/2 MD24 (1300001-)	1993	1993	004			003	
CRM	250	RR/RRII (MD24 140) (MK3)	1994	1996	041			003	
CRM	250	ARV/ARW Active Radial (MD32)	1997	1998	041			003	
FES	250	W/X Foresight	1998	1999	135				
FES	250	Y/1/2/5 Foresight	2000	2005	135			020	
GB	250	E/H Clubman (MC10 101-110)	1984	1987	049				
GB	250	J/L/P/S/V Clubman (MC 10-120-150)	1989	1997	024				
CH	250	F/G Spacy	1985	1986	102				
MXV	250	F (MC92)	1983	1988	371				
NS	250	FE/RE (MCII-100)	1984	1984	049	049			
NS	250	RG (MCII-102)	1986	1986	049	049			
NSF	250	R (Moto 3)	2018	2020	207	207			
NSR	250	RG (MC16-100)	1986	1986	025	025			
NSR	250	R5K/R5K-2 (MC18-110)	1989	1989	069	069		020	
NSR	250	R6K/R6K-2 (MC18-110)	1989	1989	069	069		020	
NSR	250	R7L/R7N (MC21-106)	1990	1990	069	069		020	

Type	ccm		from	to	FL	FR	RL	RR	P
NSR	250	R8L-3 (MC21-101) R9L (MC21-102) R8N/ R89N-3 (MC21-106)	1990	1992	069	069		020	
NSR	250	R9N (MC21-106)	1992	1992	069	069		020	
NSR	250	R2R/R3R (MC28-110)	1994	1994	069	069		052	
NSR	250	R2T/R3T (MC28-120)	1994	1994	069	069		052	
NSR	250	RR (MC28-100)	1994	1994	069	069		052	
NSS	250	Y/AY/1/A1/A3/3 Forza/Forza-S/Forza-T/ Forza-ST/Jazz/Reflex (MF04/MF06)	2000	2004	135			155	
NSS	250	AX5/AX6 Forza Z (ABS)	2005	2007	257			287	
NSS	250	EX5/EX7/EX8 Forza EX (ABS)	2005	2008	257			287	
NSS	250	X5/X7/X8 Forza X	2005	2008	257			287	
NX	250	J/K (MD21)	1987	1990	004				
NX	250	2L/M/P/2P (MD25)	1990	1993	004				
PS	250	5/6 Big Ruckus	2005	2006	257				
RS	250	R	1990	1994	014	014		161	
TRX	250	RG/RH/RJ/RK	1986	1989	004	004		102	
TRX	250	EX1/2/3/4/5/6/7/8	2001	2008	007	007			
TRX	250	X9/XA/XB	2009	2011	007	007			
VT	250	FD	1983	1983	371				
VT	250	FL Spada/Castec	1988	1990	022			020	
VT	250	CR/CT/CV "Magna"	1995	1997	014				
VTR	250	W/Y/1-7 (MC33)	1998	2007	014			020	
VTR	250	-9	2009	2010	014			020	
VTZ	250	H/J/K	1986	1988	024				
XL	250	R (MD11/D447)	1984	1987	102				
XL	250	RL	1990	1990	004			003	
XL	250	Degree (MD26)	1994	1996	041				
XLR	250	RM/R3N/RP/RR/R3R (MD22)	1991	1997	041			003	
XR	250	RE/RF/RG/RH	1984	1987	102				
XR	250	RJ/RK/RL	1988	1990	004			003	
XR	250	RM/RN/RP/RR/RS	1991	1995	004			003	
XR	250	RT/RV/RW/RX/RY/R1/R2/R3/R4	1996	2004	041			003	
XR	250	III Y/3 Baja	2000	2003	041			003	
XR	250	Y/3 (MD30)	2000	2003	041			003	
XR	250	3/5 (MD30) Motard	2003	2005	041			003	
CB	300	R10	2010	2010	332				
CB	300	F AC (ABS)	2015	2017	014			306	
CB	300	FA AC (ABS)	2018	2020	014			306	
CB	300	R AC	2018	2020	379			306	
CBR	300	RA (ABS)	2014	2020	014			306	
CBR	300	RAE (ABS)	2014	2014	022				
CBR	300	R (Non ABS)	2018	2020	014			306	
CMX	300	Rebel	2018	2020	014			306	
CMX	300	Rebel (ABS)	2018	2020	014			306	
NSS	300	AD Forza (ABS)	2013	2017	257			287	
NSS	300	D Forza (Non ABS)	2013	2015	257			287	
NSS	300	D Forza (ABS)	2018	2020	014			287	
SH	300	i 7/8/9/A/B (Non ABS)	2007	2012	257			287	
SH	300	i A7/A8/A9/AA/AB/AC (ABS Model)	2007	2013	257			287	
SH	300	i AR8/AR9/ARA (ABS Model)	2008	2010	257			287	
SH	300	R8/R9/RA (Non ABS)	2008	2010	257			287	
SH	300	i (ABS)	2014	2014	257			287	
SH	300	i (2 piston caliper/ABS)	2016	2018	014			287	
TRX	300	EX P/R/S/T/V/W/X/Y	1993	2000	007	007		007	
TRX	300	EX 1/2/3/4/5/7/8	2001	2008	007	007		007	
TRX	300	X9	2009	2009	007	007		007	
XR	300	R10	2010	2010	041			003	
CB	350	SG/SJ	1986	1990	025	025			
CB	400	N/NA/NB	1978	1981	079	079			
CB	400	T	1978	1978	068	068			
CB	400	A Honda-Matic	1979	1979	068				
CB	400	NC	1982	1982	049	049			
CB	400	SF (F2N/F2R/F2S/F2T/F3S) Superfour (NC31)	1992	1995	022	022		020	
CB	400	SF (F2V/F3T) Superfour (NC31)	1996	1997	069	069		020	
CB	400	Four V/V-II/W/W-II (NC36)	1997	1998	022	022		020	
CB	400	SF (F3V) Superfour (NC31)	1997	1997	141	141		020	
CB	400	SFX/SFY/SF1/SF2/SF3 Superfour (NC39 - Superfour/Superfour Bol D'Or)	1999	2003	279	279		148	
CB	400	SS (SS2-NC41)	2001	2005	014				
CB	400	SF4/S/S5 (NC39 - Superfour/Superfour Bol D'Or)	2004	2005	279	279		021	
CB	400	NZ		1979	079				
CB-1	400	(CB 400 F)	1989	1990	022			020	
CBR	400	RG (NC23) 100	1986	1986	025	025			
CBR	400	RH-YA (NC23) 101	1986	1986	025	025			
CBR	400	RRL/RRN/RRR (NC29) Gull-Arm	1990	1994	022	022		306	
CBR	400	RRJ/RRK (NC23) Tri-Arm (102/109)	1992	1993	022	022		020	
CL	400	(NC38)	1998	2003	014				
FJS	400	D6/D7/D8 Silverwing (Non ABS 256mm front disc)	2006	2008	135			014	303
FJS	400	A9/D9	2009	2009	178				303
NS	400	RF/RG	1985	1987	050	050		050	
NT	400	Bros (NC25)	1988	1988	069			020	
NV	400	CJ/CK Steed	1992	1993	024				
NV	400	CS/CV Steed	1995	1997	022				
NV	400	DCY/DC1/DC2 (NC40) Shadow Slasher	2000	2002	014				
NX4	400	Falcon	2002	2005	041			003	
RVF	400	RR/RR-II/RT/RT-II (NC35)	1994	1996	069	069		052	

Type	ccm		from	to	FL	FR	RL	RR	P
SW-T	400	(FJS 400 A9/AB) ABS	2009	2016	257			014	303
SW-T	400	(FJS 400 D9)	2009	2009	257			014	303
TRX	400	EXX/EXY/EX1-EX8	1999	2008	007	007		007	
TRX	400	X9	2009	2009	007	007		007	
VFR	400	ZG/ZH/RG/RG-YA (NC21)	1985	1987	025	025			
VFR	400	RH2/RJ (NC24)	1987	1988	025	025		020	
VFR	400	R3K/R3N (NC30)	1989	1992	069	069		052	
VFR	400	R3L/R3M (NC30)	1990	1991	069	069		052	
VRX	400	T (NC33)	1996	1996	014			021	
VT	400	FD	1983	1985	371	371		371	
XR	400	RT/RV/RW/RX/RY/R1/R2/R3/R4	1996	2005	041			003	
XR	400	M (ND08/NC38E) Supermotard	2006	2008	022			003	
TRX	420	FE7/FE8/FE9FEA/FEB 4WD Fourtrax ES	2007	2011	007	007			
TRX	420	FM7/FM8/FM9/FMA/FMB 4WD Fourtrax	2007	2011	007	007			
TRX	420	TE7/TE8/TE9 Fourtrax ES 2WD	2007	2009	007	007			
TRX	420	TM7/TM8/TM9/TMA/TMB Fourtrax 2WD	2007	2011	007	007			
TRX	420	FA9/FAA/FAB Fourtrax Auto 4WD	2009	2011	007	007		243	
TRX	420	FPA9/FPAA/FPBA Fourtrax Auto Power Steering	2009	2011	007	007		243	
TRX	420	FPM9/FPMA/FPMB Fourtrax 4WW Power Steering	2009	2011	007	007			
TRX	420	All Models	2014	2019	007	007		243	
CB	450	SG/SJ	1986	1988	025	025			
CB	450	DX-X	1989	1992	149	149		149	
CMX	450	CH/CJ Rebel	1987	1988	050				
CRF	450	R2/R3/R4/R5/R6/R7	2002	2007	041			176	
CRF	450	X5/X6/X7	2005	2007	041			176	
CRF	450	R8/R9/RA/RB/RC/RD/RE	2008	2018	041			176	
CRF	450	X	2008	2020	041			176	
CRF	450	XLR (Road Legal)	2014	2016	041			176	
CRF	450	R (260mm F/Disc)	2015	2020	041			176	
CRF	450	RE (Limited Road Use)	2016	2016	041			176	
CRF	450	RX (18" Rear Wheel)	2017	2020	041			176	
CRF	450	L (18" Rear Wheel)	2018	2020	041				
TRX	450	R4/R5/R6/R7/ER7/R8/ER8/R9/ER9	2004	2009	041	041		243	
CB	500	R/T	1994	1996	014				
CB	500	V/W/SW/X/SX/Y/SY/2/S2 (Twin)	1997	2003	106			023	
CB	500	F (Non ABS)	2013	2020	014			306	
CB	500	FA (ABS)	2013	2020	014			306	
CB	500	FD/FE/FF (Non ABS)	2013	2020	014			306	
CB	500	X (Non ABS)	2013	2020	014			020	
CB	500	XA (ABS)	2013	2020	014			020	
CBF	500	4 (Non ABS Model)	2004	2004	014			021	
CBF	500	A4/A5/A6/A7 (ABS Model)	2004	2007	257			021	
CBR	500	FH/FJ/FK/FL (Four)	1987	1990	025	025			
CBR	500	R (Non ABS/Twin)	2013	2020	014			020	
CBR	500	RA (ABS/Twin)	2013	2020	014			020	
CMX	500	REBEL (ABS)	2018	2020	014			306	
CMX	500	REBEL (Non ABS)	2018	2020	014			306	
CR	500	RE/RF/RG	1984	1986	102				
CR	500	RH/RJ/RK/RLR/RM/RN/RP/RR	1987	1994	004			003	
CR	500	RS/RT/RV/RW/RX/RY/R1	1995	2001	041			003	
CX	500	CA/CB/Z/A/B	1979	1981	080	080			
CX	500	CC	1982	1982	050	050			
CX	500	EC	1982	1982	050	050		050	
CX	500	TCC "Turbo"	1983	1983	050	050		050	
FT	500	C	1982	1982	050			050	
GL	500	DC	1982	1982	050	050			
NX	500	J/K/L/M/N/P/R/S/T Dominator	1988	1996	024			020	
NX	500	V/W/X Dominator	1997	1999	106			023	
SXS	500	M2 Pioneer (2 Seat)	2015	2017				399	
TRX	500	FA5/FA6/FA7/FA8/FA9/FAA/FAB Fourtrax Auto	2005	2011	240	240			
TRX	500	FE5/FE6/FE7/FE8/FE9/FEA/FEB Fourtrax Foreman 4WD/ES	2005	2011	240	240			
TRX	500	FM5/FM6/FM7/FM8/FM9/FMA/FMB Fourtrax Foreman 4WD	2005	2011	240	240			
TRX	500	FPE8/FPE9/FPEA Fourtrax Foreman Power Steering	2005	2011	240	240			
TRX	500	TM5/TM6 Fourtrax Foreman	2005	2006	240	240			
TRX	500	FAC Fourtrax Foreman AT 2/4WD	2012	2012	007	007			
TRX	500	FEC Fourtrax Foreman ES 2x4 WD	2012	2012	007	007			
TRX	500	FMC Fourtrax Foreman S 2/4WD	2012	2012	007	007			
TRX	500	FPAC Fourtrax Foreman 2/4 WD	2012	2012	007	007			
TRX	500	All Models	2014	2019	007	007		243	
VF	500	FE/F2E/FF/F2F	1984	1985	050	050		050	
VT	500	ED/EF	1983	1985	371	371			
XBR	500	F/G/H/SJ	1985	1989	050				
XR	500	RD/RE	1984	1985	102				
CBX	550	FC/F2C/FD/F2D	1982	1984	372	372		371	
CB	600	FW/FX Hornet (16" Wheels)	1998	1999	014	014		021	
CB	600	F2Y/F21/F22 Hornet S (17" Wheels)	2000	2004	014	014		021	
CB	600	FY/F1/F2/F3/F4/F5/F6 Hornet (17" Wheel)	2000	2006	014	014		021	
CB	600	F7/F8/F9/FA/FB/FC Hornet	2007	2013	014	014		242	
CB	600	FA7/FA8/FA9/FAA/FAB/FAC Hornet (ABS)	2007	2013	257	257		021	
CBF	600	N4/N5/N6 (Non ABS)	2004	2006	014	014		021	
CBF	600	NA4/NA5/NA6 (ABS Model)	2004	2006	014	014		021	

Type	ccm		from	to	FL	FR	RL	RR	P
CBF	600	S4/S5 (Non ABS)	2004	2005	014	014		021	
CBF	600	SA4/SA5/SA6/SA7 (ABS)	2004	2008	014	014		021	
CBF	600	N8/N9/NA (Non ABS)	2008	2011	014	014		021	
CBF	600	NA8/NA9/NAA (ABS)	2008	2011	257	257		021	
CBF	600	S8/S9 (Non ABS)	2008	2009	014	014		021	
CBF	600	SA8/SA9/SAA (ABS/Non ABS)	2008	2012	257	257		021	
CBR	600	FH/FJ/FK/FL	1987	1990	025	025			
CBR	600	FM/FN/FP/FR	1991	1994	025	025		021	
CBR	600	FS/FT/FV/FW	1995	1998	014	014		021	
CBR	600	FX/FY	1999	2000	279	279		021	
CBR	600	F1/F2	2001	2002	279	279		021	
CBR	600	FS1/FS2 "Sport"	2001	2002	279	279		021	
CBR	600	F3/F4/F5/F6	2003	2006	279	279		021	
CBR	600	RR3/RR4	2003	2004	279	279		021	
CBR	600	RR5/RR6 (Radial Caliper)	2005	2006	214	214		021	
CBR	600	RR7/RR8/RR9/RAA/RRB/RRC/RRD/RRE/ RRF/RRG (Radial Caliper)	2007	2016	214	214		242	
CBR	600	RR Hannspree	2008	2008	214	214		242	
CBR	600	RA9/RAA/RAB/RAC/RAD/RAG (C-ABS)	2009	2016	214	214		242	
CBR	600	FAB/FAC (ABS)	2011	2013	257	257		021	
CBR	600	FB/FC (Non ABS)	2011	2013	014	014		242	
CBR	600	RR	2017	2020	386	386		242	
CBR	600	RR ABS	2017	2020	386	386		242	
FJS	600	1/2/B3/B4/D5/D6/D7/D8 Silverwing	2001	2008	135			014	303
NTV	600	J/K/M Revere	1988	1992	022			020	
SW-T	600	(FJS 600 AB) (ABS Model)	2011	2016	257			014	303
VT	600	CN Shadow Custom	1993	1993	024				
VT	600	CR/CS/CT/CV/CW/CX Shadow Custom	1994	2000	022				
XL	600	RD/LD/LRE/LE/RF/RG/RH	1983	1987	102				
XL	600	LMF/RMG/RMH	1985	1987	050				
XL	600	VH/VJ/VK Trans Alp	1987	1990	050				
XL	600	VM/VN/VP Trans Alp	1991	1993	024			020	
XL	600	VR/VT Trans Alp	1994	1996	014			020	
XL	600	VV/VW/VX Trans Alp	1997	1999	041	041		020	
XR	600	RF/RG/RH	1985	1987	102				
XR	600	RJ/RK/RL	1988	1990	004				
XR	600	RM/RN	1991	1992	004			003	
XR	600	RP/RR/RS/RT/RV/RW/RX/RY	1993	2000	041			003	
CB	650	Z/B	1979	1981	068	068			
CB	650	F (ABS)	2014	2020	022	022		306	
CB	650	FE/FG	2014	2016	022	022		306	
CB	650	R AC	2019	2020	379	379		306	
CB	650	RA AC	2019	2020	379	379		306	
CBR	650	F (Non ABS)	2014	2020	022	022		306	
CBR	650	FA (ABS)	2014	2020	022	022		306	
CBR	650	R 2AC	2018	2020	379	379		306	
CBR	650	RA 2AC	2018	2020	379	379		306	
CX	650	ED	1983	1983	049	049		050	
CX	650	TD Turbo	1983	1983	049	049		050	
FMX	650	(5/6)	2005	2008	014			020	
FX	650	X/Y Vigor	1999	2003	106			023	
GL	650	D2-E	1984	1984	049				
NT	650	J/K/L Bros	1988	1992	069			020	
NT	650	V/W	1997	1998	106			020	
NT	650	VW/VX/VY/V1 Deauville	1998	2001	106	106		020	
NT	650	V2/V3/V4/V5	2002	2005	178	178		178	
NTV	650	J/K/L/M/P/S/T/V	1988	1997	022			020	
NX	650	J/K/L/LII/M Dominator	1988	1991	024			020	
NX	650	N/P/R/S/T Dominator	1992	1996	024			020	
NX	650	V/W/X Dominator	1997	1999	106			023	
SLR	650	V/W	1997	1998	106			023	
TRX	650	FA3/FA4/FA5 Rincon 4x4 Auto	2003	2005				243	
XL	650	VY/V1-V7 Transalp	2000	2007	041	041		020	
XR	650	L	1993	2020	041	041		003	
XR	650	RY/R1-R7	2000	2007	041			003	
XRV	650	J Africa Twin	1988	1989	024			020	
	650	Bros Product One			069				
DN-01	680	(NSA 700 A8/A9)	2008	2011	257	257		014	303
TRX	680	FA6/FA7/FA8/FA9/FAA/FAB/FAC Rincon 4x4 Auto	2006	2014	240	240		243	
CTX	700	DE-DCT	2014	2019	014			020	303
CTX	700	N-DCT	2014	2019	014			020	303
MUV	700	-9 Big Red Side x Side	2009	2009	339	338	341	340	
NC	700	DC Integra Scooter	2012	2014	257			021	303
NC	700	S (Non ABS)	2012	2013	014			020	
NC	700	SA (ABS)	2012	2013	257			021	
NC	700	SD (ABS/DCT)	2012	2014	257			021	303
NC	700	X (Non ABS)	2012	2013	014			020	
NC	700	XA (ABS)	2012	2013	257			021	303
NC	700	XD (ABS/DCT)	2012	2014	257			021	303
NT	700	V6/V7/V8/VA Deauville	2006	2013	257	257		178	
NT	700	VA6/VA7/VA8/VAA Deauville (ABS)	2007	2013	257	257		178	
SXS	700	M2 Pioneer (2 Seat)	2016	2018				399	
SXS	700	M4 Pioneer (4 Seat)	2016	2018				399	
TRX	700	XX8/XX9/XXB	2008	2011	041	041		240	
XL	700	V8/V9/VA Transalp (2 Piston Front Caliper/ ABS on Rear Disc)	2008	2011	041	041		020	

Type	ccm		from	to	FL	FR	RL	RR	P
XL	700	VA8/VA9/VAA Transalp (3 Piston Front Caliper/ ABS Front & Rear wheels)	2008	2011	257	257		021	
ADV	750	H (X-ADV DCT)	2017	2018	379	379		306	303
CB	750	F/F1	1976	1977				171	
CB	750	F2	1978	1978	078	078		079	
CB	750	FZ/FA/FB	1978	1982	078	078		078	
CB	750	KZ	1980	1980	068	068			
CB	750	FC/F2C/FD/F2D	1983	1984	049	049		050	
CB	750	F2N/F2R/F2S/F2T/F2V/F2W/F2X/F2Y/ F21 CB Seven Fifty	1992	2002	022	022		021	
CBR	750	FH Superaero (RC27)	1987	1987	051	051			
CBR	750	FJ Superaero (RC27)	1988	1988	022	022		014	
CBX	750	FE	1984	1984	050	050			
NC	750	D Integra Scooter DCT	2014	2015	014			306	303
NC	750	S (ABS)	2014	2018	014			306	
NC	750	S (Non ABS)	2014	2015	014			306	303
NC	750	S DCT (ABS)	2014	2018	014			306	303
NC	750	X (ABS)	2014	2018	014			306	
NC	750	X (Non ABS)	2014	2015	014			306	
NC	750	X DCT (ABS)	2014	2018	014			306	303
NM4	750	Vultus (NC750J)	2015	2019	014			020	303
NR	750	N	1992	1992	069	069		052	
RVF	750	RR/RS (RC45)	1994	1998	069	069		052	
VF	750	SC (V45 Sabre)	1982	1982	050	050			
VF	750	C Shadow	1983	1983	050				
VF	750	FD/FE	1983	1984	050	050			
VF	750	CP/CR/CS/CT/CV/CW/CX	1993	1999	014	014			
VFR	750	FG/FH	1986	1987	051	051			
VFR	750	FJ/FK	1988	1989	022	022		014	
VFR	750	RJ/RK/RL (RC30)	1988	1990	069	069		052	
VFR	750	FL/FM/FN/FP	1990	1993	022	022		014	
VFR	750	FR/FS/FT/FV	1994	1997	022	022		014	
VT	750	CV/C2V/CW/C2W/CX/C2X/CY/C2Y/C1/ C21/C31/C4/C5/C6/C7/C8 Shadow	1997	2009	014				
VT	750	DC1/DC2 Black Widow	2001	2004	014				
VT	750	DC7/DC8 Shadow Spirit	2007	2009	014				
VT	750	C2BA/C2BB/C2BC/C2BE Shadow Black Spirit (Rear drum)	2010	2016	014				
VT	750	CS2A/C25B Shadow (3 piston caliper/ rear disc/17"front wheel)	2010	2012	257			148	
VT	750	S (VT 750 SA/SB)	2010	2012	014				
VT	750	C Shadow Aero	2018	2020	257				
VT	750	C Shadow Aero (ABS)	2018	2020	257			148	
XLV	750	R (RD/RF)	1983	1988	050				
XRV	750	L/M/N Africa Twin	1990	1993	025	025		020	
XRV	750	P/R/S/T/V/W/X/Y Africa Twin	1994	2003	041	041		020	
PC	800	Pacific Coast	1989	1997	022	022			
VFR	800	FiW/FiX/FiY/Fi1/2/3/4/5/A2/A3/A4/A5	1998	2005	178	178		178	
VFR	800	6/8/9	2006	2009	257	257		178	
VFR	800	A6/A8/A9	2006	2013	257	257		178	
VFR	800	XB/XC/XD (Crossrunner ABS)	2011	2013	257	257		277	
VFR	800	F (ABS)	2014	2018	214	214		277	
VFR	800	XF/XG (Crossrunner/ABS)	2015	2016	214	214		277	
VFR	800	XH/XJ (Crossrunner/ABS)	2017	2018	386	386		277	
CB	900	FZ/FA	1980	1981	078	078		078	
CB	900	FB/F2B	1982	1985	049	049		050	
CB	900	FC/F2C/FD/F2D	1984	1985	050	050		050	
CB	900	F2/F3/F4/F5/F6/F7 Hornet	2002	2007	069	069		021	
CBR	900	RRN/RRP Fireblade (893cc)	1992	1993	069	069		021	
CBR	900	RRR/RRS Fireblade (893cc)	1994	1995	069	069		021	
CBR	900	RRT/RRV Fireblade (918cc)	1996	1997	069	069		021	
CBR	900	RRW/RRX Fireblade (918cc)	1998	1999	134	134		021	
CBR	900	Evolution Blade	1999	1999	064	064		038	
CBR	900	RRY/RR1 Fireblade (929cc)	2000	2001	134	134		021	
CBR	900	RR2/RR3 Fireblade (954cc)	2002	2003	134	134		021	
CB	1000	FP/FR/FS/FT/FV	1993	1997	069	069		021	
CB	1000	R (ABS Model)	2009	2016	257	257		277	
CB	1000	R (Non ABS Model)	2009	2015	214	214		277	
CB	1000	R (ABS Model)	2017	2020	386	386		014	
CBF	1000	6/7/8/9/A (2 piston front calipers / Non ABS Model)	2006	2011	014	014		021	
CBF	1000	A A6/A7/A8/A9/AA (3 Piston Front Caliper / ABS)	2006	2010	257	257		257	
CBF	1000	S S7/S8/S9/SA (3 Piston Front Caliper / ABS)	2007	2011	257	257		257	
CBF	1000	T T7/T8/T9/TA GT (3 Piston Front Caliper / ABS)	2007	2016	257	257		257	
CBF	1000	F (FA) (2 piston front calipers /Non ABS)	2010	2015	014	014		021	
CBF	1000	FA FAA (3 Piston Front Caliper / ABS Model)	2010	2015	257	257		021	
CBF	1000	FS FSA (3 Piston Front Caliper / ABS Model)	2010	2011	257	257		021	
CBF	1000	FT FTA (3 Piston Front Caliper / ABS Model)	2010	2011	257	257		021	
CBR	1000	FH/FJ	1987	1988	051	051			
CBR	1000	FK/FL/FM/FN	1989	1992	022	022		014	
CBR	1000	FP/FR/FS/FT/FV/FW/FX	1993	1999	055	055		055	
CBR	1000	RR4/RR5 Fireblade	2004	2005	214	214		021	
CBR	1000	RR6/RR7 Fireblade	2006	2007	214	214		242	
CBR	1000	RR8/RR9/RRA/RRB/RRC/RRD/RRE/RRF/ RRG Fireblade (Non ABS)	2008	2016	214	214		242	
CBR	1000	RA9/RAA/RAB/RAC/RAD/RAE/RAF/RAG/ RAH/RAJ (C-ABS) Fireblade	2009	2016	214	214		242	

Type	ccm		from	to	FL	FR	RL	RR	P
CBR	1000	RR-SP Fireblade (CBR 1000 SE/SF/SG) (Non ABS)	2014	2016	258	258		242	
CBR	1000	RR-SP Fireblade (CBR1000 SAE/SAF/SAG/SAH/SAJ/SAK - Brembo Front Caliper) (ABS)	2014	2020	258	258		242	
CBR	1000	RR-SP TT-Edition (ABS)	2016	2016	258	258		242	
CBR	1000	RAH/RAJ Fireblade (C-ABS / Tokico Front Caliper)	2017	2020	386	386		242	
CBR	1000	RRH/RRJ Fireblade (C-ABS/Tokico Front Caliper)	2017	2020	386	386		242	
CBR	1000	Fireblade 8 Ball ABS	2020	2020	258	258		242	
CBX	1000	Z	1979	1980	078	078		078	
CBX	1000	B/C	1981	1982	049	049		050	
CRF	1000	Africa Twin ABS	2016	2017	379	379		021	
CRF	1000	Africa Twin ABS DCT	2016	2020	379	379		021	303
GL	1000	K/K1/K2 Goldwing (6 Bolt disc fixing)	1975	1977	079	079		171	
GL	1000	K3 Goldwing	1978	1978	080	080		171	
GL	1000	Z Goldwing (5 Bolt disc fixing)	1979	1979	080	080		171	
PVT	1000	RS Pursuer	2017	2018	386	386			
RC213	1000	V-S	2015	2017	258	258		152	
SXS	1000	M3 Pioneer (3 Seater)	2016	2020	383	384	382	385	
SXS	1000	M3P Pioneer (3 Seater)	2016	2020	383	384	382	385	
SXS	1000	M5D Pioneer (5 Seater)	2016	2020	383	384	382	385	
SXS	1000	M5P Pioneer (5 Seater)	2016	2020	383	384	382	385	
SXS	1000	M5L Pioneer (5 Seater)	2017	2020	383	384	382	385	
VF	1000	FE/FF/FG/F2F/F2G	1984	1986	050	050			
VF	1000	RE/RF/RG	1984	1986	050	050			
VTR	1000	FV/FW/FX/FY/F1/F2/F3/F4/F5/F6 Firestorm	1997	2006	069	069		021	
VTR	1000	SPY/SP1 (SC45) (SP1)	2000	2001	134	134		021	
VTR	1000	SP2/SP3/SP4/SP5/SP6 (SP2)	2002	2007	134	134		021	
XL	1000	VX/VY/V1/V2 Varadero (Non ABS Model)	1999	2002	178	178		178	
XL	1000	V3/V4/V5/V6 Varadero (Non ABS)	2003	2006	178	178		178	
XL	1000	VA4/VA5/VA6/VA7/VA8/VA9/VAA/VAB Varadero (ABS Model)	2004	2011	257	257		178	
XL	1000	V7/V8/V9 Varadero (Non ABS Model)	2007	2011	257	257		178	
CB	1100	RBII/RCII/RDII	1980	1983	050	050		050	
CB	1100	SFY/SF1 "XII"	2000	2003	178	178		178	
CB	1100	AD (Cast Wheels / 3 Piston Caliper)	2013	2013	257	257		021	
CB	1100	AE (Cast Wheels / 4 piston Caliper)	2014	2014	279	279		021	
CB	1100	EX (SAE)	2014	2018	279	279		021	
CB	1100	RS	2017	2017	214	214		021	
CB	1100	RS	2018	2018	386	386		021	
CBR	1100	XXV/XXW/XXX/XXY/XX1-XX6 Blackbird	1997	2008	178	178		178	
CRF	1100	Africa Twin Adventure Sport ES ABS (DCT)	2018	2020	379	379		021	
CRF	1100	Africra Twin Adventure Sport ES ABS (Manual)	2018	2020	379	379		021	
GL	1100	A/DA/B/DB (SC02)	1980	1981	079	079		079	
GL	1100	C/DC Goldwing	1982	1982	049	049		050	
GL	1100	AD Goldwing Aspencade	1983	1983	049	049		050	
ST	1100	L/M/N/P/R/S Pan European (Non ABS)	1990	1995	022	022		014	
ST	1100	AN/AP/AR/AS Pan European (ABS Model)	1992	1995	022	022		014	
ST	1100	AT/AV/AW/AX/AY/A1/A2 Pan European (ABS)	1996	2002	178	178		178	
ST	1100	T/V/W/X/Y/1/2 Pan European (Non ABS)	1996	2002	022	022		014	
VT	1100	CR/CS/CT/CV/CW Shadow	1994	1998	014				
VT	1100	C2 (S/T/V/W/X/Y/1/2/3/4/5)	1995	2005	014			021	
VT	1100	C3 (W/X/Y)	1998	2000	014			021	
VFR	1200	FA	2010	2016	298	298		277	
VFR	1200	FAD DCT	2010	2017	298	298		323	303
VFR	1200	XAC/XAD/XAE/XAF/XAH/XAJ Crosstourer (Manual G/Box)	2012	2018	257	257		323	
VFR	1200	XDC/XDCD/XDE/XDF/XDG/XDH/XDJ DCT Crosstourer	2012	2018	257	257		323	303
VFR	1200	FA GT	2014	2015	298	298		277	
VFR	1200	FAD GT/DCT	2014	2015	298	298		323	303
VFR	1200	Crosstourer Highlander T/DCT	2015	2016	257	257		323	
CB	1300	X-4 DCV/DCW/DCX/DCY (SC38)	1997	2000	069	069		148	
CB	1300	FW/FX/FY (SC40)	1998	2000	126	126		148	
CB	1300	F1 (SC40)	2001	2001	134	134		148	
CB	1300	F3/F13	2003	2004	279	279		021	
CB	1300	5/6/7/8/9 (Superfour)	2005	2009	279	279		021	
CB	1300	A5/A6/A7/A8/A9 (Superfour ABS)	2005	2009	279	279		021	
CB	1300	S5/S6/S7/S8/S9	2005	2009	279	279		021	
CB	1300	SA5/SA6/SA7/SA8/SAA	2005	2010	279	279		021	
CTX	1300	AE	2014	2017	257	257		178	
ST	1300	2/3/4/6 Pan European (Non ABS)	2002	2007	178	178		178	
ST	1300	A2/A3/A4/A6 Pan European (ABS Model)	2002	2007	178	178		178	
ST	1300	8/9 Pan European (Non ABS)	2008	2009	257	257		178	
ST	1300	A8/A9/AA-AE Pan European (ABS)	2008	2017	257	257		178	
VT	1300	CXA (Fury/Chopper) (9 spoke wheel/ Non ABS)	2010	2020	014	014		021	
VT	1300	CXAA (Fury/Chopper) (9 spoke wheel/ ABS model)	2010	2020	257	257		021	
VT	1300	CTA Interstate	2011	2013	257			327	
VTX	1300	C/T (Cast Wheel Models)	2003	2008	014			021	
VTX	1300	S (Spoke Wheel Models)	2003	2008	014			021	
GL	1500	J/K/SEM/SEN/SEP/SER/SES/SEV/SEW/SEX/SEY Goldwing	1988	2000	024	024			
GL	1500	CV/CW/CX/CY/C1/C2 (F6C)	1997	2003	022	022		014	
F6B	1800	Goldwing (GLF6BA)	2013	2017	178	178		327	

Type	ccm		from	to	FL	FR	RL	RR	P
F6C	1800	Goldwing (4 Piston Caliper) (GLF6CAE)	2014	2017	279	279		327	
GL	1800	A1/A2/A3/A4/A5 "Goldwing"	2001	2005	178	178		327	
GL	1800	6/7/8/9/A/C/D/E/F/G/H Goldwing	2006	2017	178	178		327	
GL	1800	BD Goldwing J (Manual)	2018	2020				257	
GL	1800	D Goldwing Tour J (DCT)	2018	2020				257	303
GL	1800	DA Goldwing Tour Airbag J (DCT)	2018	2020				257	303
GL	1800	Goldwing Tour J (Manual)	2018	2020				257	
GL	1800	J Goldwing (DCT)	2018	2020				257	303
VTX	1800	C2/C3/C4/C15/C16/C17	2002	2008	178	178		178	
F6B		Goldwing (GLF6BA)	2013	2017	178	178			
		HONDA DALL'ARA							
CR	125	Motard	2004	2006				176	
CRE	125	R Enduro	2002	2003				176	
CRE	125	R Enduro	2004	2007				176	
CRE	125	R Supermotard	2002	2006				176	
XR	125	SM	2004	2004	041			121	
XR	250	R	2004	2004	041			003	
XR	250	SM	2004	2004	041			176	
XR	400	/440 R	2004	2004	041			176	
XR	400	/440 SM	2004	2004	041			176	
XR	650	R	2004	2004	041			003	
		HONGDOU							
CTM	125	Chituma	2004	2004	011				
GHD	125	-7	2005	2007	344				
		HONLEY							
HD1	125		2014	2015	264				
HD2	125		2016	2017	264				
HD3	125		2016	2017	264				
HD3	125	SE	2016	2017	264				
	125	Oliver	2015	2016	161				
RX3	250	Venture	2015	2017	011				
		HOREX							
	80	Rebell N			159				
	80	Rebell T	1986	1986	159				
	80	Sport L	1986	1986	159				
	125	Imperator	1996	1996	081				
	125	Regent	1996	1996	081				
	500	/600 Columbus	1988	1988	081	081		081	
	560	E	1996	1996	081	081		081	
HRD	600		1985	1985	081	081		081	
	600	Columbus	1987	1987	081	081		081	
VR6	1200	Classic	2013	2014	141	141		152	
VR6	1200	Roadster	2011	2014	141	141		152	
		HP POWER							
	50	Copper (4T)	2010	2012	011			121	
	50	Iron (2T)	2010	2011	038			150	
	50	Tin (4T/4V)	2010	2012	136				
	125	Chromel (4T/LC)	2011	2012	011			011	
	125	Lithium (2T/LC)	2010	2012	011			011	
	150	Chromel (4T/LC)	2011	2012	011			011	
	150	Lithium (4T/2V/LC)	2010	2012	011			011	
	150	Nickel (4T/2V)	2010	2011	011			332	
	260	Barum (4T/2V/LC)	2010	2011	332			286	
	300	Chromel	2011	2011	011			011	
	300	Radium (4T/4V)	2011	2012	011			011	
	600	Pantera	2011	2011	124			023	
		HRD							
GS	50				122				
	50	Sonic 2 Supermotard			095			121	
	50	Sonic 2 Trail			095			121	
WH	125	Road/Red Horse	1985	1985	038				
	125	Cabriolet	2001	2001	095			121	
	125	Cabriolet Supermotard			095			121	
	125	Cabriolet Trail			095			121	
		HUSABERG							
FS		Supermotard models	2004	2004	212				
		4 piston calipers	2001	2013	032				
		All models	1995	1998	031			084	
		All models	2000	2001	031			023	
		All models (Central fixing pin in pad)	1989	1992				005	
		All Models (Fixing Pin at end of Brake Pad)	1993	1994				005	
		Enforcer Four	2000	2003	031	031		031	
TE	125		2012	2014	031			191	
FE	250	(4T)	2013	2014	031			191	
TE	250	(2T)	2011	2014	031			191	
TE	300	(2T)	2011	2014	031			191	
FE	350	(4T)	2013	2014	031			191	
FE	350	Enduro	1991	1994	006			084	
FE	390	(New 70° Engine)	2010	2012	031			191	
FC	400		1999	2002	031			023	
FE	400	/530/650 Supermoto	1993	1998				084	
FE	400	/530/650 Supermoto	1999	2003	031			023	
FE	400	S,E	1999	2003	031			023	
FE/FC	400	/450/501/550/650 Oversize with 270mm disc	1999	2013	031			023	

Type	ccm		from	to	FL	FR	RL	RR	P
FS	400	E,C	2001	2002	032			023	
FC	450		2003	2013	031			023	
FE	450	(New 70° Engine)	2008	2014	031			191	
FE	450	E	2006	2008	031			023	
FS	450	E	2006	2008	231			023	
FS	450	R	2006	2006	231			023	
FX	450		2010	2012	031			191	
FX	450	E	2003	2009	031			023	
GS	450	E	2006	2013	231			023	
FC	470		2001	2002	031			023	
FX	470	E	2001	2002	031			023	
FC	501		1991	1994	031			023	
FC	501		1999	2001	031			023	
FE	501	(4T)	2013	2014	031			191	
FE	501	Enduro	1991	1994	006			084	
FE	501	S,E	1999	2004	031			023	
FC	550		2001	2012	031			023	
FE	550	E	2006	2007	031			023	
FE	550	E	2008	2008	031				
FS	550	E Supermoto	2005	2007	231				
FE	570		2009	2012	031				
FE	570	(New 70° Engine)	2009	2012	031			191	
FS	570	Supermoto	2010	2011	238			191	
FE	600	S,E	1999	2002	031			023	
	600	Enduro	1999	2001	031			023	
FE	650	E	2006	2008	031				
FS	650	C	2001	2005	032			023	
FS	650	C	2006	2008	231			023	
FS	650	E	2001	2005	032			023	
FS	650	E	2006	2008	231			023	
FX	650	E	2001	2012	031			023	
GS	650	E	2006	2013				023	
		HUSQVARNA							
2T		All models	1992	1999	002				
2T		All models	2000	2001	031			023	
4T		All models	1992	1999	002				
4T		All models	2000	2001	031			023	
		Husky Boy J	2001	2002	121				
		Husky Boy R	2001	2001	121				
		Husky Boy S	2001	2002	121				
CR	50		2011	2013	190			190	
CR	50	Junior	2005	2005	173				
CR	50	Senior Pro	2005	2005	173			190	
SM	50		2002	2002	095			121	
SM	50		2011	2013	190			190	
TC	50		2018	2019	190			190	
TC	50	Mini	2018	2019	190			190	
WR	50		2002	2002	095			121	
WRS	50	Scooter	1998	2000	121				
CR	65		2011	2013	185			297	
TC	65		2018	2020	185			185	
TC	85	(2T) (17"/14" wheels)	2014	2020	307			297	
TC	85	(2T) (19"/16" wheels)	2014	2020	307			297	
TC	85		2021	2021	031			191	
TE	100		2005	2005	173				
CR	125		1985	1990	038				
CR	125		1991	1991	006				
CR	125		1992	1994	002			007	
CR	125		1995	1999	031			023	
CR	125		2000	2004	031			023	
CR	125		2005	2013	031			191	
SM	125		1998	2000	031			023	
SM	125	S	2002	2013	031			023	
SM	125	S (4 bolt Fixing) (2T)	2002	2003	031			023	
SM	125	S (4 bolt fixing) (2T)	2004	2013	031			023	
SM	125	S (4T)	2011	2013	031			023	
SMR	125	(4T)	2011	2013	031			023	
SMS	125	-4 (4T)	2011	2011	031			023	
TC	125	(2T)	2014	2020	031			191	
TE	125	(2T)	2014	2019	031			191	
TE	125	(4T)	2011	2013	031			023	
TX	125	(2T)	2018	2019	031				
WR	125		1987	1988	006				
WR	125		1991	1991	006				
WR	125		1992	1994	002			007	
WR	125		1995	1999	031			023	
WR	125		2000	2005	031			023	
WR	125		2006	2008	031			023	
WR	125		2006	2013	031			191	
WRE	125		1993	2013	031			023	
WXE	125		2007	2007	095			003	
XC	125		1985	1986	038				
	125	Enduro	2000	2013	031			023	
	125	Supermotard	1999	2013	031			023	
TE	150	i (2T)	2018	2020	031			191	
	200	Prof	1986	1986	038	038		038	

Type	ccm		from	to	FL	FR	RL	RR	P
CR	240		1985	1986	038				
CR	240		1987	1988	006				
WR	240		1987	1988	006				
WR	240		1991	1991	006				
CR	250		1985	1986	038				
CR	250		1987	1988	006				
CR	250		1991	1991	006				
CR	250		1992	1994	002			007	
CR	250		1995	1999	031			023	
CR	250		1996	1999	031			023	
CR	250		2000	2005	031			023	
CR	250		2005	2013	031			191	
FC	250	(4T)	2014	2020	031			191	
FE	250	(4T)	2014	2020	031			191	
TC	250	(2T)	2014	2020	031			191	
TC	250	(4T)	2002	2002	031			023	
TC	250	(4T)	2003	2004	031			191	
TC	250	(4T)	2005	2012	031			191	
TC	250	R (4T) (Kayaba Forks)	2013	2013	031			191	
TE	250	(2T) inc Tpi	2014	2020	031			191	
TE	250	(4T)	2002	2005	031			023	
TE	250	(4T)	2006	2013	031			191	
TE	250	Meo Replica (4T)	2011	2011	031			191	
TXC	250	Cross Country	2008	2012	031			191	
TXC	250	R (4T) (Kayaba Forks)	2013	2013	023			191	
WR	250		1987	1988	006				
WR	250		1990	1991	006				
WR	250		1992	1994	002			007	
WR	250		1995	2011	031			023	
WR	250	(2T)	1995	1999	031				
WR	250	(2T)	2000	2005	031			023	
WR	250	(2T)	2006	2008	031			023	
WR	250	(2T)	2009	2013	031			023	
XC	250		1985	1986	038				
XC	250		1987	1988	006				
WR	260		1990	1991	006				
TC	300		2014	2015	031			191	
TE	300	(2T)	2011	2013	031			191	
TE	300	(2T)	2014	2020	031			191	
TE	300	Tpi (2T) inc Jarvis Edition	2019	2020	031			191	
TX	300	(2T)	2018	2019	031			191	
WR	300		2006	2011	031			023	
WR	300	(2T)	2009	2012	031			191	
TE	310	(4T)	2009	2013	031			191	
TE	310	R (4T) (Kayaba Forks)	2013	2013	031			191	
TXC	310	Cross Country	2012	2012	031			191	
TXC	310	R (4T) (Kayaba Forks)	2013	2013	031			191	
FC	350	(4T)	2014	2020	031			191	
FE	350	(4T)	2014	2020	031			191	
FX	350	(4T)	2018	2020	031			191	
TE	350		1990	1991	006				
TE	350		1992	1994	002			007	
TE	350		1995	1997	031			023	
CR	360		1992	1994	002			007	
WR	360		1992	1994	002			007	
WR	360		1995	1999	031			023	
WR	360		2000	2002	031			023	
SM	400	R	2002	2002	064			023	
TE	400		2001	2001	031			023	
TE	400		2002	2002	031			023	
WR	400		1987	1988	006				
	400	Enduro	1985	1985	038				
	401	Svartpilen (4T)	2018	2020	305			023	
	401	Vitpilen (4T)	2018	2020	305			023	
TE	410		1995	2000	031			023	
TE	410		2006	2006	031			191	
TE	410	E	2000	2000	031			023	
CR	430		1987	1988	006				
WR	430		1987	1988	006				
XC	430		1987	1988	006				
	430	Automatic	1987	1988	006				
	430	Enduro	1985	1985	038				
SMR	449		2011	2011	177			191	
TC	449	(4T)	2011	2013	031			191	
TE	449	(4T)	2011	2013	031			191	
FC	450	(4T) inc Rockstar Edition	2014	2020	031			191	
FE	450	(4T)	2014	2020	031			191	
FR	450	(4T)	2016	2020	106			191	
FX	450	(4T)	2017	2019	031			191	
SM	450	R	2003	2006	064			023	
SM	450	R (Radical Caliper)	2007	2010	177			191	
SM	450	RR	2008	2010	177			191	
SMR	450	RR (Rad.cal.)	2006	2007	177			191	
TC	450		2003	2004	031			023	
TC	450		2005	2010	031			191	
TE	450		2002	2002	031			023	

Type	ccm		from	to	FL	FR	RL	RR	P
TE	450		2003	2005	031			023	
TE	450		2006	2010	031			191	
TXC	450		2011	2013	031			191	
CR	500		1985	1986	038				
CR	500		1987	1988	006				
CR	500	CX	1984	1985	038				
TC	500		1986	1986	038				
XC	500		1985	1986	038				
XC	500		1987	1988	006				
FE	501	(4T)	2014	2015	031			191	
	504		1983	1983	038				
SM	510	R	2005	2005	064			023	
SM	510	R (Radial Caliper)	2006	2009	177			191	
TC	510		1987	1988	038				
TC	510		1989	1990	006				
TC	510		2004	2005	031			023	
TC	510		2005	2009	031			191	
TC	510	Centennial	2004	2013	031			023	
TE	510		1986	1987	038				
TE	510		1987	1988	038				
TE	510		1989	1990	006				
TE	510		2004	2005	031			023	
TE	510		2006	2010	031			191	
TE	510	Dart	1990	1990				084	
TX	510		1987	1988	038				
TXC	510		2009	2010				191	
WMX	510		1989	1989	006				
WXE	510		1989	1989	006				
SMR	511		2011	2013	177			191	
TE	511	(4T)	2011	2013	031			191	
SM	530	RR	2008	2010	177			191	
SM	570	R	2001	2004	064			023	
TC	570		2002	2003	031			023	
TE	570		2001	2004	031			023	
TE	570		2009	2013	031			191	
	570	Nox	2001	2003	141			023	
LT	610	(6 Bolt Front Disc)	2000	2000	141			023	
SM	610		2005	2005	141			023	
SM	610	(6 bolt front disc)	1998	2000	141			023	
SM	610	ie	2007	2009	177			023	
SM	610	R	2000	2000	141			023	
SM	610	S (4 bolt front disc)	2002	2006	141			023	
SM	610	S (Radial Caliper)	2006	2006	177			023	
TC	610		1991	1991	006				
TC	610		1992	1994	002			007	
TC	610	E	1995	1999	031			023	
TC	610		1995	2004	031			023	
TE	610		1991	1991	006				
TE	610		1992	1994	002			007	
TE	610		1995	2004	031			023	
TE	610	E	1995	2003	031			023	
TE	610	E Supermotard	1999	2013	031			023	
TE	610	ie	2006	2009	031			023	
SMR	630		2004	2004	006			023	
SMR	630		2006	2006	064			023	
SMR	630	(4T)	2010	2012	177			191	
TE	630		2010	2012	031			023	
STR	650	CRC	2007	2007	177			023	
TR	650	Strada (Cast wheel)	2012	2013	106			023	
TR	650	Terra (Spoke wheel)	2012	2013	106			023	
	701	Enduro	2016	2020	106			023	
	701	Enduro LR	2019	2020	106			023	
	701	Supermoto	2016	2020	177			023	
	701	Svartpilen	2018	2020	141			023	
	701	Vitpilen	2018	2020	141			023	
	900	Nuda	2012	2013	141	141		023	
	900	Nuda R	2012	2013	258	258		023	
		HYOSUNG							
SB	50		2000	2000	047				
SB	50	P	2000	2000	047				
SD	50		2000	2006	047				
SF	50	R Rally Prima	2000	2006	047				
	50	Avanti	1999	2006	047				
	50	Newtee (4T)	2014	2015	114				
	50	Prima	1999	2006	047				
	50	Rush	1997	1997	047				
	50	Sense	1998	2006	047				
	50	Super Cab	1995	2006	047				
	50	Super Cab Plus	1998	2006	047				
EZ	100		1999	2002	047				
SF	100	R	2005	2006	047				
	100	Cab	1998	1998	047				
FX	110	DLX Midas Plus	1999	2004	047				
KR	110	Master	2004	2004	047				
GD	125	EXIV	2012	2012	134			047	
GPS	125	Grand Prix / Hyper (Rear Drum Model)	1999	2004	038				

Type	ccm		from	to	FL	FR	RL	RR	P
GPS	125	Grand Prix Plus (Rear Disc Model)	2000	2004	038			011	
GT	125		2004	2004	011			011	
GT	125	Naked	2003	2003	011			011	
GV	125	Aquilia	2001	2006	011				
MS3	125	(cc)	2007	2009	334	332		334	
MSI	125	/150	2005	2005	038				
RT	125	Karion	2002	2009	011				
RX	125		2001	2002	011				
XRX	125	Enduro	2000	2006	011				
XRX	125	LC Enduro	2014	2015	144			047	
XRX	125	LC Supermoto	2014	2015	144			047	
XRX	125	Supermoto	2007	2011				088	
	125	/250 Comet	2004	2004	011			011	
	125	Aquilia	2000	2001	002				
	125	Boomer/Exceed	2002	2003	038				
	125	Comet GT (Naked)	2004	2006	011			011	
	125	Exceed (MS 125/150)	2002	2004	038			011	
	125	Grand Prix	1999	2004	038				
	125	Hyper	1999	1999	098				
	125	V2	1999	1999	022				
GD	250	i Naked	2013	2015	134			150	
GT	250	i R (EFi)	2014	2015				150	
GV	250	Aquilia	2001	2009	011				
MS3	250	i	2007	2009	334	332		334	
	250	Comet GT	2004	2005	011			011	
	250	Comet GT (Naked)	2004	2006	011			011	
RX	400		2005	2005	011			003	
TE	400		2005	2005	144			092	
RX	450	SM	2008	2008	177			023	
TE	450	Quad Rapier	2006	2009	144	144			
GT	650		2006	2008	011	011		011	
GT	650	(Naked)	2009	2012	134	134			
GT	650	i (Naked)	2012	2015	134				
GT	650	i R	2014	2015	134	134		150	
GT	650	iR	2009	2013	134	134			
GT	650	R	2004	2004	011	011		011	
GT	650	S	2005	2008	011	011		011	
GT	650	X	2007	2007	011	011		011	
GV	650	Aquilia	2004	2006	011	011		011	
	650	Comet GT (Naked)	2004	2006	011			011	
	650	Comet GT R	2004	2006	011	011		011	
	650	Comet GT S	2005	2006	011	011		011	
GV	700	C			011	011		011	
ST	700	i Deluxe (ST 700i)	2012	2015	134			134	
ST7	700	(ST 700i)	2010	2015	134	134			
ST		E3 (Electric Scooter)	2010	2011	047				
		Eva Electric Scooter (ST-E3)	2013	2014	047			047	
		GA-4	1999	1999	037				
		Krillo Master	2004	2004	047				
		CH RACING							
WSM	50	Motard	2005	2005	095			121	
WXE	50	Enduro	2005	2005	095			121	
WSM	125	Motard	2005	2005	095			121	
WXE	125	Enduro	2005	2005	095			121	
		INDIAN							
FTR	1200		2018	2020	328	328		152	
FTR	1200	Rally	2020	2020	328	328		152	
FTR	1200	S	2019	2020	328	328		152	
FTR	1200	S Race Replica	2019	2020	328	328		152	
	1800	Challenger 1800cc	2019	2020				014	
	1800	Challenger Dark Horse 1800cc	2019	2020				014	
	1800	Challenger Limited 1800cc	2019	2020				014	
	1800	Chief Classic (Nissin Caliper)	2014	2020	207	207		014	
	1800	Chief Vintage (Nissin Caliper)	2014	2020	207	207		014	
	1800	Chieftain (Nissin Caliper)	2014	2020	207	207		014	
	1811	Roadmaster (Cast Wheel/Nissin Calipers)	2015	2020	207	207		014	
		Dark Horse (Brembo calipers)	2010	2013	064	064		081	
		Chief All Models Chief/Deluxe/ Springfield_Road Master/Vintage	2002	2008	132			132	
		Chief Blackhawk (Brembo Calipers)	2011	2011	064	064		081	
		Chief Blackhawk Dark (Brembo Calipers)	2011	2011	064	064		081	
		Chief Classic (Brembo Calipers)	2011	2013	064	064		081	
		Chief Dark Horse	2014	2020	207	207		014	
		Chief Deluxe (Brembo calipers)	2009	2009	064	064		081	
		Chief Roadmaster (Brembo calipers)	2009	2011	064	064		081	
		Chief Vintage (Brembo calipers)	2009	2013	064	064		081	
		Chieftain Dark Horse (Nissin Calipers)	2016	2020	207	207		014	
		Chieftain Limited (Nissin Calipers)	2017	2020	207	207		014	
		Roadmaster Classic (Nissin Calipers)	2017	2020	207	207		014	
		Roadmaster Elite (Nissin Calipers)	2017	2020	207	207		014	
		Scout (Cast Wheel/Nissin Calipers)	2015	2016				230	
		Scout	2017	2020	106			023	
		Scout All models Scout/Deluxe/ Springfield	2002	2008	132			132	
		Scout Bobber	2018	2020	106			023	
		Scout Bobber Twenty	2019	2020	106			023	

Type	ccm		from	to	FL	FR	RL	RR	P
		Scout Sixty	2017	2020	106			023	
		Scout Sixty (Toso Calipers/Cast Wheels)	2016	2016				230	
		Spirit All Models Deluxe/Springfield/ Roadblaster	2002	2008	132			132	
		Springfield	2016	2020	207	207		014	
		Springfield Dark Horse	2018	2020	207	207		014	
		IRON PEGASUS							
		Small Caliper (Single pin fixing)			121			038	
		ISR							
		22-025-XX (4 Piston)			038				
		22-027 (2 Piston rear)						038	
		22-028 (2 Piston)			038				
		22-029 (2 Piston rear)						038	
		22-032 (6 Piston Large)			119				
		22-034 (6 Piston small)			368				
		22-036 (2 Piston)			368				
		22-042 (6 Piston Racing)			119				
		22-043 (4 Piston)			368				
		Radial 6 Piston Monoblock			368				
		ITALJET							
SX1	50	Scooter	2008	2009	136				
	50	/125/150 Jet Set	2002	2003	211				
	50	Bazooka	1992	1997	114				
	50	Cruise	1995	1995	114				
	50	Dragster	1998	2007	121			121	
	50	Formula	1998	2000	098, 107			098, 107	
	50	Formula (FR50/H088)	1994	1998	118			107	
	50	Formula Air	1999	2003	121				
	50	Formula LC	1996	2003	121			121	
	50	it Scooter	2009	2009	332				
	50	Ombra Nera	1997	2000	121				
	50	Pista 2	1992	1992	114				
	50	Pit Jet (2T)	2007	2009	250			250	
	50	Rollercraft	2008	2008				088	
	50	Scoop	1993	1993	114				
	50	Torpedo	1998	2003	121				
	50	Yankee 8	1994	1994	114			114	
	80	Formula	1994	1994	118			098	
	100	/125/150 Millennium	2002	2004	211				
	100	Millennium	2000	2001	018				
	125	/150 Jack	2007	2007	188			188	
	125	/150 Jupiter	2002	2002				146	
	125	Dragster LC	2000	2008	121			121	
	125	Formula (4T/Single Cyl)	2014	2015	011			137	
	125	Formula (FR50/H088)	1994	1994	118			098	
	125	Formula LC (2T/Twin Cyl)	1996	2003	121			121	
	125	Millennium	2000	2001	018				
	125	Pit Jet (4T Pro)	2007	2009	250			250	
	125	Torpedo	2007	2009	188				
	125	Torpedo (4T)	1999	2003	121				
	125	Twin	1998	1998	121			121	
	150	/150 Jupiter	2002	2002	099				
	150	Millennium	2000	2001	018				
	150	Torpedo	2001	2001	121				
	150	Torpedo	2008	2009	188				
	180	Dragster LC	2000	2008	121			121	
	250	Dragster	2007	2008	121			121	
	250	Jupiter	2002	2003	099			215	
	350		1983	1983	038	038			
	400	cc Marco Polo Scooter	2007	2009	022	022		150	
	650	Bazooka	2006	2006	011			011	
	650	Grifon #59	2006	2006	011			011	
	650	Grifon #59	2007	2007				106	
	900	Grifon	2000	2000	064				
		J. J. COBAS							
TR1			1985	1985				008	
		Trial	1985	1985	008				
		JAWA							
		All Disc Models			097				
	50	Minarelli	2003	2004	121				
	50	Robby	2003	2004	121				
	100	Robby	2003	2004	121				
CZ	125	2T			081				
CZ	125	MX			081				
	125	Dandy	1999	2002	121			121	
	125	Dandy	2003	2004	121			121	
	125	Chopper	2003	2004	097				
	125	Sport	2003	2004	121			121	
	125	Travel	2003	2004	121			121	
CZ	180		1992	1992	081				
	180		1993	1993	081				
	300	Trail	1993	1993	081				
	350		1993	1995	097				
	350	Californian	2003	2004	097				
	350	Californian	2009	2010	022				

Type	ccm		from	to	FL	FR	RL	RR	P
	350	Classic	2003	2004	097				
	350	Chopper	2003	2004	097				
	350	New Classic	2013	2014	022				
	350	Tramp	2003	2004	097				
	650	Classic 836	2007	2007	031				
		JAYBRAKE							
		A4 P/L			039				
		Dual 7 Quad (300-04) (2&4 Piston)			121				
		Early Design 2 Piston			184				
		J-Four (300-44) (4 Piston)			039				
		JCB (UTILITY VEHICLES)							
	800	D Groundhog (4x4)	2008	2009	356	356		356	
	800	D Workmax (4x4)	2010	2014	356	356		356	
	1000	D Groundhog (4x4)	2008	2009	356	356		356	
	1000	D Groundhog (6x4)	2008	2009	356	356		356	
	1000	D Workmax (4x4)	2010	2014	356	356		356	
	1000	D Workmax (6x4)	2010	2014	356	356		356	
		JCM							
	125	Europa	1989	1989	008			008	
	125	Oxygene	1989	1989	120				
	125	SR	1989	1989	008			008	
	125	Week-End	1989	1989	120				
	233	Vega	1988	1988	120			096	
	240	Enduro	1991	1991	120				
	240	Europa	1989	1989	121				
	240	Oxygene	1989	1989	120				
	240	SR	1989	1989	008			008	
	240	Week-End	1989	1989	120				
	250	Week-End	1991	1991	120				
	325	Europa	1989	1989	008				
	325	Oxygene	1989	1989	120				
	325	SR	1989	1989	008			008	
	325	Week-End	1989	1989	120				
	333	Vega	1987	1987	120				
	333	Vega	1988	1988	120			096	
		Trial	1987	1987	120				
		JIALING							
JE	125	E Dragon	1998	1998	011				
JH	125	B Roadster	1998	1998	144				
		JIANSHE							
JS	125	3	2002	2002	099				
		JINCHENG							
JC	125	2A/3A	1997	1997	009				
JC	125	2B	1997	1997	071				
JC	125	7B	1997	1997	289				
JC	150	T-D	2006	2006	099				
		JOHN DEERE							
	500	/650 Buck EX/EXT	2004	2008	182	205			
	500	/650 Trail Buck EX/EXT	2004	2005	182	205			
XUV	620	i Gator (Petrol)	2010	2010	356	356		356	
XUV	625	i Gator (Petrol)	2011	2011	347	347		356	
XUV	825	i Gator (Petrol)	2011	2011	347	347		356	
XUV	850	D Gator (Petrol)	2010	2010	356	356		356	
XUV	855	D Gator (Diesel)	2011	2011	347	347		356	
HPX		4x4 (Diesel) (SN040000)	2010	2010	315	315		315	
HPX		4x4 Gator (Diesel)	2010	2010	315			315	
HPX		4x4 Gator (Diesel)	2010	2011	356	356		356	
HPX		4x4 Gator (Petrol)	2010	2011	315	315		315	315
HPX		4x4/4x4 Trail Gator (Petrol)	2010	2011	315	315		315	
		Gator HPX (all models)	2004	2005	315			315	
		JONWAY							
YY	50	QT-10 (2T) Viper	2007	2009	011				
YY	50	QT-10 (4T) Viper	2007	2009	011				
YY	50	QT-28 (2T) Raptor	2007	2009	011				
YY	50	QT-28 (4T) Raptor	2007	2009	011				
YY	50	QT-6 (2T) Agility	2007	2009	011				
YY	50	QT-6 (4T) Agility	2007	2009	011				
YY	80	QT-6 (4T) Agility	2007	2009	011				
YY	125		2008	2009	009			009	
YY	150		2008	2009	009			009	
YY	150	T-19	2008	2009	011			011	
YY	250	/250 A	2008	2009	009			009	
YY	250	T-19	2008	2009	011			011	
	50	Bob	2003	2004				216	
	50	Easy	2003	2004	114				
	50	Hipo	2003	2004				216	
	50	Mars	2003	2004				216	
	90	Bob	2003	2004				216	
	90	Hipo	2003	2004				216	
	90	Mars	2003	2004				216	
	100	Bob	2003	2004				216	
	100	Easy	2003	2004	114				
	100	Hipo	2003	2004				216	
	100	Mars	2003	2004				216	
		JOTAGAS							
JT	125	for FRONT Braktec caliper	2014	2014	325				

GOLD fren

Type	ccm		from	to	FL	FR	RL	RR	P
JT	250	for FRONT Braktec caliper	2014	2014	325				
JT	280	for FRONT Braktec caliper	2014	2014	325				
JT	300	for FRONT Braktec caliper	2014	2014	325				
JTG		JT	2012	2012	308				
		JOURNEYMAN							
RX	510	Gladiator	2008	2008	284	284		281	
		KAWARA							
	50	Fever	1999	1999	114				
	90	Fever	1999	1999	114				
	90	Stinger	1999	1999	114				
		KAWASAKI							
AR	50	A1/C2-C10	1981	1997	047				
KFX	50	(KSF 50 B7F/B8F/B9S)	2007	2009				183	
KFX	50	(KSF 50 BDF/BEF/BFF/BGF/BHF)	2013	2017				183	
KSR1	50	(KMX50 B1/B2)	1990	1991	042			005	
KX	65	A1/A2/A3/A4/A5/A6/A6F/A7F/A8F/A9F/AAF/ABF/ACF/ADF/AEF/AFF/AGF/AHF/AJF	2000	2020	167			144	
AR	80	A1/C1-C8	1981	1991	047				
KSR II	80	(KMX 80 B1/B2)	1990	1991	042			005	
KX	80	E2/E3/G1/G2/J1/J2	1984	1987	047				
KX	80	L1-L3/N2/N3/R1-R6/T1-T6	1988	1996	047			007	
KX	80	R7/W1/W2/W3	1997	2000	108			007	
KX	85	(FR 17"/RR 14")	2001	2020	108			007	
KX	85	(FR 19"/RR 16")	2001	2020	108			007	
KFX	90	(KSF 90 A7F/A8F/A9F/AAF/ABF/ACF/ADF/AEF/AFF/AGF/AHF)	2007	2017				183	
KH	100	G4	1983	1983	005				
KH	100	G5-G8 (EX)	1984	1987	005				
KX	100	A1/A2/B1/B2/B3	1988	1994	047			007	
KX	100	B5-B6	1995	1996	047			007	
KX	100	B7/C1/C2/C3	1997	2000	108			007	
	112	Kaze-R New	2004	2004	332				
	115	Kazer			009				
AR	125	A1-A7/B1-B8	1982	1994	005				
BN	125	A1/A2 Eliminator	1998	1999	144				
BN	125	A3/A4/A5/A6F/A7F Eliminator	2000	2007	332				
J	125	ABS (SC125 AGF/BGF/CGF/CHF/CJF)	2016	2018	022			302	
J	125	SE/ABS (SC125 AGFA/BGFA/CGFA/CHFA/CJFA)	2016	2018	022			302	
KDX	125	A1/A2/B1/B2	1990	1994	047			001	
KH	125	K2-K10	1982	1998	005				
KH	125	K1	1983	1983	144				
KH	125	L1 (EX)	1984	1984	005				
KLX	125	L (B1/B2/B3/B6F)	2003	2006	109				
KLX	125	CAF/CBF/CCF/CCS/CDS/CDF/CEF/CFF/CGF	2010	2016	002			144	
KLX	125	DAF/DBF/DCF/DDF/DEF (D-Tracker)	2010	2014	002			144	
KMX	125	A1-A5/B1-B9	1986	1998	047			005	
KMX	125	B2-B12 (From E/No MX AE 013437)	1987	2003	109			005	
KX	125	B1	1982	1982	047				
KX	125	B2/C1/D1	1983	1985	005				
KX	125	E1	1986	1986	005			005	
KX	125	E2/F1	1987	1988	035			005	
KX	125	G1/H1/H2/J1/J2	1989	1993	002			001	
KX	125	K1	1994	1994	041			001	
KX	125	K2/K3/K4/K5	1995	1999	041			003	
KX	125	L1/L2/L3/L4	1999	2002	041			003	
KX	125	/250/500 Supermotard with 320mm disc	2003	2005	041			003	
KX	125	M1/M2/M3	2003	2005	041			003	
KX	125	M6F/M7F/M8F	2006	2008	041			003	
RM	125	K6/K7/K8	2006	2008	041				
Z	125	(BR125 GGF/GHF Auto G/Box)	2016	2020	336			144	
Z	125	PRO (BR125 HGF/JHF Manual G/Box)	2016	2020	336			144	
Z	125	Pro SE (BR 125 JJFS Manual G/Box)	2018	2020	336			144	
	125	Ninja ABS	2019	2020	336			144	
ZX	130	R Kaze	2008	2010	332				
KLX	140	(17" Front/14" Rear)	2008	2020	002			144	
KLX	140	L (19" Front/16" Rear)	2008	2020	002			144	
KLX	140	G (21" Front/18" Rear)	2017	2020	002			144	
KLX	150	L (KLX 150 EFF)	2014	2015	002			144	
KLX	150	D-Tracker (KLX 150HGF)	2016	2016	002			144	
SC	150	A1 (Epsilon 150)	2002	2003	109				
KDX	200	C1/C2/C3	1986	1988	005				
KDX	200	E1/E2/E3/E4	1989	1992	005			001	
KDX	200	E5/E6	1993	1994	002			001	
KDX	200	H1/H2/H3/H4/H5	1995	1999	041			001	
KDX	200	SR (DX 200G)			002			001	
KMX	200	A2/A3	1988	1992	047			005	
Z	200	A6	1983	1983	005				
KDX	220	R A4/A5/A6/A7/A8/A9/A10/A11/A12/A6F	1997	2006	041			001	
KDX	220	SR (DX 220B)			041			001	
KLX	230		2019	2020	002			144	
KLX	230	R	2019	2020	002			144	
BJ	250	B1-B7A Estrella	1992	1999	005			005	
BJ	250	C1-C7 Estrella RS	1999	2002	005			005	
BJ	250	F1/F2 (250 TR)	2002	2003	124				

Type	ccm		from	to	FL	FR	RL	RR	P
EL	250	Eliminator	1987	1989	037				
EL	250	D1-D5	1990	1994	037				
ER	250	B1-B3 (Z250T Scorpion)	1983	1988	037				
EX	250	K8F/K9F/KAF/KBF/KBFA/KCF Ninja 250R	2008	2012	332			332	
GPX	250	R (EX 250 E)	1986	1986	037			037	
GPX	250	R (EX 250 F)	1987	1987	013	013		044	
GPX	250	R (ZX 250 F2-F9)	1988	1995	013			044	
GPX	250	RII (EX 250G)	1988	1988	044	044		044	
GPZ	250		1983	1983	037	037			
GPZ	250	Belt Drive (KZ250A/C/B039)	1983	1984	005				
GPZ	250	R (EX 250 E)	1986	1986	037			037	
KDX	250	D1-D4	1991	1994	002			001	
KDX	250	SR (KDX 250 F1)	1991	1991	002			001	
KL	250	G1/G1A Super Sherpa	1997	1997	108			005	
KL	250	J1-J3 Stockman	2000	2002	108			005	
KLE	250	A2 Anhelo	1995	1995	013			084	
KLE	250	A3	1997	1997	013			084	
KLE	250	A5/A6	2000	2001	013			084	
KLR	250	D2-D22	1984	2005	005				
KLX	250	R D1/D2	1993	1994	041			001	
KLX	250	F1-F4 (KLX 250 ES)	1994	1997	041			001	
KLX	250	G1	1994	1994	041			001	
KLX	250	H1 Super Sherpa	1998	1998	108			005	
KLX	250	J1-J6 D-Tracker	1998	2003	041			003	
KLX	250	S H6F/H7F	2006	2007	041			003	
KLX	250	SF	2009	2020	002			003	
KR	250	A1/A2	1984	1986	005	005		037	
KR-1	250	(KR 250 B2)	1989	1989	044	044		044	
KR-1S	250	(KR 250 C2/C3)	1990	1992	032	032		044	
KSF	250	A1-A18 (KFX 250 Mojave)	1987	2004	091	091		007	
KX	250	B1	1982	1982	047				
KX	250	C1/C2/D1	1983	1985	005				
KX	250	D2	1986	1986	005			005	
KX	250	E1/F1	1987	1988	035			005	
KX	250	G1/H1/H2/J1/J2	1989	1993	002			001	
KX	250	K1	1994	1994	041			001	
KX	250	K2-K5	1995	1998	041			003	
KX	250	L1/L2/L3/L4	1999	2002	041			003	
KX	250	M1/M2/R1 (2T)	2003	2005	041			003	
KX	250	F (KX 250N1/N2) (4T)	2004	2006	041			187	
KX	250	F (T6F/T7F/T8F) (4T)	2006	2008	041			187	
KX	250	R6F/R7F/R8F (2T)	2006	2008	041			003	
KX	250	F (KX 250 W9F/XAFB/YBF/YCF/ZDF/ZEF) (4T)	2009	2014	041			187	
KX	250	F DFI	2011	2014	041			187	
KX	250	F (ZZF/ZGF/AHF/AJF/AKF)	2015	2019	041			187	
KX	250	F	2020	2020	041			187	
KX	250	F	2021	2021	041			187	
KXF	250	A1/A2 Tecate 4	1987	1988	091	091		047	
KXT	250	A2 Tecate - 3 Wheel Model	1985	1985	005			005	
KXT	250	B1 Tecate - 3 Wheel Model	1986	1986	005			005	
KXT	250	B2 Tecate - 3 Wheel Model	1987	1987	005			007	
SC	250	A1 (Epsilon 250)	2002	2003	147			102	
Z	250	A1/A2	1978	1980				016	
Z	250	A3	1981	1981	127	127		016	
Z	250	Ninja SL (BX 250 AFF/AFS/AFSA KRT Edition Non ABS)	2015	2015	332			332	
Z	250	Ninja SL (BX 250 BFSA/BGSA KRT/ABS Edition)	2015	2016	332			332	
Z	250	Ninja SL BX 250 (BFF/BFS/BGF/BGFS ABS)	2015	2016	332			332	
Z	250	SL (Naked/ABS) (BR 250 FFF/FGF/FHF)	2015	2017	332			332	
Z	250	SL (Naked/Non ABS) (BR 250 EFF/EGF)	2015	2016	332			332	
ZR	250	A1-A5 Balius	1991	1995	013			084	
ZR	250	B6 Balius-II	2002	2002	124			005	
ZX-25	250	Ninja	2020	2020	213			021	
ZXR	250	(ZX 250 A1/A2)	1989	1990	044	141		044	
ZXR	250	R (ZX 250 B1/B2)	1989	1990	044	044		044	
ZXR	250	C1-C3 (ZX250 C1-C3)	1991	1995	044	044		084	
ZXR	250	R (ZX 250 D1)	1991	1991	044	044		084	
ZZR	250	(EX 250 H1-H13)	1990	2003	013			084	
EL	252	(EL250 F2/F3/F5/F6)	1996	2003	037				
EX	300	ADF/AEF/AFF Ninja (Non ABS)	2013	2015	332			332	
EX	300	BDF/BEF/BFF/BGF Ninja (ABS)	2013	2016	332			332	
EX	300	AEFA/AFFA/AGFA Ninja (Non ABS)	2014	2016	332			332	
EX	300	BEFA/BFFA/BGFA Ninja (ABS)	2014	2016	332			332	
J	300	AEF/AFF/AGF (Non ABS)	2014	2016	022			302	
J	300	AEFA/AFFA Special Edition (Non ABS)	2014	2016	022			302	
J	300	BEF/BFF/BGF/CHF/CJF (ABS Model)	2014	2020	022			302	
J	300	BEFA/BFFA/BGFA/CHFA/CJFA Special Edition (ABS Model)	2014	2020	022			302	
KEF	300	B1/B2/B3 Lakota Sport	2001	2003	091	091		007	
KLE	300	BHF Versys-X (Non ABS)	2017	2020	022			332	
KLE	300	CHF/CJF Versys-X (ABS)	2017	2020	022			332	
KLF	300	B1-B17 Bayou	1988	2004	005	005			
KLF	300	C1-C17 Bayou	1989	2005	009	002			
KLX	300	A2/A3/A4/A5/A6/A7/A8/A9/A10/A6F/A7F	1997	2007	041			003	
KLX	300	R	2019	2020	002			003	

A B C D E F G H CH I J K L M N O P Q R S T U V W X Y Z

Type	ccm		from	to	FL	FR	RL	RR	P
KVF	300	A1-A4/B1-B4/(Prairie 4x4/2x4)	1999	2002	144	144			
KVF	300	CCF/CDF/CEF/CFF/CGF/CHF Brute Force	2012	2017	230	230		230	
Z	300	ER 300 AFF/AGF/AGFA (Non ABS)	2015	2016	332			332	
Z	300	ER 300 BFF/BGF/BGFA (ABS)	2015	2016	332			332	
GPZ	305	A1/B1-B10	1983	1996	005	005			
KVF	360	A1-A3/A6F/A7F/A8F/A9F/AAF/ABF/ ACF/ADF Prairie	2003	2013	144	144			
KVF	360	B1-B3/B6F-B9F	2003	2009	144	144			
KVF	360	C1-C3/C6F/C7F/C8F Prairie (All Models)	2003	2008	144	144			
EX	400	Ninja (EX 400 GJF/GJFA - ABS)	2017	2020	332			332	
EX	400	Ninja (EX400 GJF/GJFA - ABS KRT)	2018	2020	332			332	
FX	400	(ZX 400 E1-E3)	1986	1988	005	005		037	
FX	400	R (ZX 4000 E1-E3)	1986	1988	005			037	
GPX	400	R (ZX 400 F1)	1987	1987	044	044		013	
GPZ	400	R (ZX 400 D1/D3/D3A)	1985	1987	005	005		037	
GPZ	400	R D4	1988	1988	044	044		013	
KLF	400	B1-B7 Bayou	1993	1999	009	002			
KLX	400	R (KLX 400 B1/B2)	2003	2004	041			003	
KSF	400	A1/A2/A3/A6F (KFX400)	2003	2006	007	007		092	
KVF	400	A1/A2/B1 Prairie	1997	1998	144	144			
KVF	400	C1/C2/C3/C4 (Prairie 4x4)	1999	2002	144	144			
KVF	400	D1/D2/D3/D4 (Prairie 2x4)	1999	2002	144	144			
Z	400	J2/J3	1980	1983	127	127			
Z	400	C2/C3 (Z400 F2)	1985	1987	005	005		037	
Z	400	ABS	2018	2020	332			332	
ZL	400	A Eliminator	1986	1987	037				
ZL	400	B Eliminator 400 SE	1988	1988	005	005			
ZL	400	D1/D2	1994	1995	013				
ZR	400	A1/B1 (Z400 F)	1983	1984	005	005			
ZR	400	D1/D3/D4 Zanthus	1992	1995	044	044		084	
ZR	400	Zephyr (G2/G3/G4/G5)	1997	2001	032	032		093	
ZRX	400	(ZR 400 E1/E2)	1994	1995	013	013		093	
ZRX	400	E3 (ZR 400 E3)	1996	1996	104	124		093	
ZRX	400	(ZX 400 E4-E7)	1998	2001	194	194		093	
ZX-4	400	(ZX 400 G1/G1A/G1B)	1988	1988	044	044		044	
ZXR	400	H1/H2	1989	1990	032	032		016	
ZXR	400	J1/J2	1989	1990	032	032		016	
ZXR	400	(L1-L9)	1991	2003	090	090		016	
ZXR	400	R (ZX 400 M1-M4)	1991	1994	032	032		016	
ZZ-R	400	(ZX 400 K1/K2/K3)	1990	1992	032	032		013	
ZZ-R	400	(ZX 400 N1/N2/N3/N4/N5/N6/N7)	1993	1999	032	032		093	
Z	440	C2	1981	1981	127				
Z	440	H1/H2	1981	1981	127				
Z	440	D5/D6 LTD	1983	1984	127				
EN	450	A1-A6	1985	1990	037				
KFX	450	R Quad (KSF 450 B8F/B9F/BAF/BBF/ BCS/BDF/BEF)	2008	2014	245	108		007	
KLX	450	R (A8F/A9F/AAF/ABF/ACF/ADF/AEF/ AFF/AGF/AHF/AJF)	2008	2018	041			187	
KX	450	F (D6F/D7F/D8F/E9F/EAF/EBF/FCF/ FDF/FEF)	2006	2014	041			187	
KX	450	F (ZFF/ZGF/AHF/AJF)	2015	2018	041			187	
KX	450	F (4T) 270mm Front/250mm Rear Rotor	2019	2020	041			187	
KX	450	F Tomac (JKF) (4T) 270mm Front/250mm Rear Rotor	2019	2019	041			187	
LTD	454	(EN 450 A1-A5)	1986	1989	037				
EN	500	A1-A3	1990	1993	037				
EN	500	B1-B2	1994	1995	037				
EN	500	C1-C9	1996	2004	037				
ER-5	500	(ER500 A1/A2/A3/A4)	1997	2000	013				
ER-5	500	(ER500 C1/C3/C4/C5P)	2001	2007	104				
GPZ	500	S (EX500 A1-A6)	1987	1993	013				
GPZ	500	S (EX500 B1-B5)	1988	1993	005	005			
GPZ	500	S (EX500 D1-D7)	1994	2001	013	013		084	
GPZ	500	S (EX500 E1-E10)	1994	2004	044	044		005	
KLE	500	A1-A12	1991	2004	013			084	
KLE	500	B1P/B6F/B7F	2005	2007	013			084	
KX	500	A1/A2/B1	1983	1985	005				
KX	500	B2	1986	1986	005			005	
KX	500	C1/D1	1987	1988	035			005	
KX	500	E1-E5	1989	1993	002			001	
KX	500	E6-E7	1994	1995	041			001	
KX	500	E8-A16	1996	2004	041			003	
Z	500	B1/B2	1979	1980				076	
GPZ	550	D1	1982	1982	127	127		127	
GPZ	550	H1/H2	1982	1983	127	127		127	
GPZ	550	A1-A4 (ZX 550 A1-A4)	1984	1987	037	037		037	
GT	550	G1-G9	1983	2001	005	005			
Z	550	A2/A3/C1/C2/LTD	1981	1984	127	127			
ZR	550	A1/A2 (Z550 F)	1983	1984	005	005			
ZR	550	B2/B3 Zephyr	1991	1993	013	013		044	
ZR	550	B4/B5/B6 Zephyr	1994	1999	013	013		093	
GPX	600	R (ZX 600 C1-C7)	1988	1996	013	013		013	
GPZ	600	R A1-A5A	1985	1989	037	037		037	
GPZ	600	R	1994	1994	013	013		013	
KLR	600	A1/B1-B4/B6-B9	1984	1994	005				
Z	600		1983	1983	037	037		037	
ZL	600	B1 Eliminator	1995	1997	013	013			

Type	ccm		from	to	FL	FR	RL	RR	P
ZX	600	C1-C10 Ninja R	1988	1997	013	013		013	
ZX-6R	600	(ZX600 F1-F3)	1995	1997	032	032		093	
ZX-6R	600	(ZX 600 G1/G2)	1998	1999	039	039		093	
ZX-6R	600	(ZX 600 J1/J2)	2000	2001	039	039		093	
ZX-6R	600	(ZX 600 P7F/P8F)	2007	2007	249	249		093	
ZX-6R	600	(ZX 600 R9F/RAF/RBF/RCF/RDF/REF/ RFF/RGF 599cc)	2009	2016	249	249		093	
ZX-6RR	600	(ZX600 K1/M1)	2003	2004	200	200		093	
ZX-6RR	600	(ZX 600 N1/N6F)	2005	2006	200	200		093	
ZZR	600	(ZX 600 D1-D3)	1990	1993	032	032		013	
ZZR	600	(ZX 600 E1-E13)	1993	2005	032	032		093	
ZZR	600	(ZX 600 E6F)	2006	2007	032	032		093	
ZX-6R	636	(ZX 636 A1P)	2002	2002	039	039		093	
ZX-6R	636	(ZX 636 B1/B2)	2003	2004	200	200		093	
ZX-6R	636	(ZX 636 C1/C6F)	2005	2006	200	200		093	
ZX-6R	636	Ninja (ABS - 636cc)	2013	2020	324	324		242	
ZX-6R	636	Ninja (Non ABS - 636 cc)	2013	2020	324	324		242	
ZX-6R	636	30th Anniversary Edition (ZX 636 EFFA / Non ABS/ 636cc)	2015	2015	324	324		242	
ZX-6R	636	30th Anniversary Edition (ZX 636 FFFA / ABS 636cc)	2015	2015	324	324		242	
ZX-6R	636	Ninja KRT (ABS - 636cc)	2016	2020	324	324		242	
ZX-6R	636	Ninja KRT (Non ABS - 636cc)	2016	2020	324	324		242	
EN	650	Vulcan S (ABS)	2015	2020	135			021	
EN	650	Vulcan S (Non ABS)	2015	2020	135			021	
EN	650	Vulcan S Café (ABS)	2018	2020	135			021	
EN	650	Vulcan S SE (ABS)	2018	2020	135			021	
ER-6F	650	(EX 650 A6F/A7F/A8F/C9F/CAF/CBF)	2006	2011	104	124		093	
ER-6F	650	(EX 650 B6F/B7F/B8F/D9F/DAF/DBF) ABS	2006	2011	104	124		093	
ER-6F	650	(EX 650 ECF/EDS/EEF/EFF/EGF) (Double pipe typeframe/Non ABS)	2012	2016	104	124		093	
ER-6F	650	(EX 650 FCF/FDS/FEF/FFF/FGF) Double pipe typerame/With ABS)	2012	2016	104	124		093	
ER-6N	650	(ER 650 B6F/B7F/B8F/D9F/DAF/DBF)	2006	2011	104	124		093	
ER-6N	650	(EX 650 A6F/A6F/A8F/C9F/CAF/CBF)	2006	2011	104	124		093	
ER-6N	650	(EX 650 ECF/EDF/EEF/EFF/EGF) (Non ABS)	2012	2016	104	124		093	
ER-6N	650	(FCF/FDF/FEF/FFF/FGF) ABS	2012	2016	104	124		093	
EX	650	R (EX 650 CBF)	2011	2014	104	124		093	
EX	650	Ninja (ABS)	2017	2020	014	014		021	
EX	650	Ninja (Non ABS)	2017	2020	014	014		021	
EX	650	Ninja (KRT)	2018	2020	014	014		021	
KL	650	B1-B3 Tengai	1989	1992	013			005	
KLE	650	A7F/A8F/A9F/CAF/CBF/CCF/CDF/CEF Versys	2007	2014	104	124		093	
KLE	650	B7F/B8F/B9F/DAF/DBF/DCF/DDF/DEF Versys (ABS)	2007	2014	104	124		093	
KLE	650	Versys (KLE 650 EFF) (Non ABS)	2015	2015	022	022		020	
KLE	650	Versys (KLE 650 FFF) (ABS)	2015	2015	022	022		020	
KLE	650	Versys (ABS) (KLE650 FGF/FHF/FHFA/ FJF/FJFA)	2016	2020	022	022		021	
KLE	650	Versys (Non ABS) (KLE650 EGF)	2016	2016	022	022		021	
KLR	650	A1-A3	1987	1989	035			084	
KLR	650	C1-C10	1995	2004	104			005	
KLR	650	(KL 650 E8F/E9F)	2008	2009	334			332	
KLX	650	C1/C2/C3	1993	1997	041			001	
KLX	650	R (KLX650C/G245)	1993	1995	041			001	
KLX	650	R D1 (KLX650C/G245)	1996	2000	041			003	
KLX	650	R	2001	2003	041			001	
KVF	650	A1/A2 Prairie	2002	2003	245	108			
KVF	650	D1/D6F/D7F/D8F/D9F/DAF/DBF Brute Force 4x4	2005	2011	245	108			
KVF	650	E1/E6F/E7F/E8F/E9F Brute Force 4x4 Hardwoods Green HD	2005	2009	245	108			
KVF	650	F7F/F8F Brute Force 4x4i Hardwoods Green	2007	2008	009	002			
KVF	650	G7F/G8F Brute Force 4x4i Hardwoods Green	2007	2008	009	002			
KVF	650	H7F/H8F Brute Force 4x4i	2007	2008	009	002			
KVF	650	FCF/FSC/FDF/FEF	2012	2014	009	002			
W	650	(EJ 650 A1/C3/C4/C5/C6/C7)	1999	2005	124				
Z	650	C3	1979	1979				076	
Z	650	D2/D3 (SR)	1979	1980				076	
Z	650	F2/F3/F4	1981	1983	127	127			
Z	650	(ER 650 GHF) (Non ABS)	2017	2020	022	022		021	
Z	650	(ER 650 HHF/HJF) (ABS)	2017	2020	022	022		021	
	650	(KLE CBF/CCF/CEF) Versys Non ABS	2012	2012	104	124		093	
KSV	700	A1/A2/A6F/A7F/A8F/A9F/ABF (KFX 700) V-Force	2004	2006	245	108			
KVF	700	A1/A2/A7F/A8F/B1/B2/B6F 4x4 Prairie	2004	2008	245	108			
KVF	700	D1 Team Green	2005	2005	245	108			
ST	700	Stallion	2014	2018	070	070		014	
VN	700	A1 Vulcan	1985	1985	037	037			
Z	700	A1 "LTD"	1984	1984	127	127		127	
ZN	700	A1/A2 Ltd	1984	1985	037	037		037	
GPX	750	R (ZX 750 F1-F3)	1987	1989	013	013		013	
GPZ	750	R1	1982	1982	127	127		127	
GPZ	750	A1-A5	1983	1987	037	037		037	
GPZ	750	E1-E2 (Turbo)	1984	1987	037	037		037	
GPZ	750	R G2/G3	1985	1986	037	037		037	
GT	750	P1-P9	1982	1996	127	127		127	
KRF	750	A8F/B8F Teryx 4x4 (RUV)	2008	2008	009	002			

Type	ccm		from	to	FL	FR	RL	RR	P
KRF	750	F8F Teryx 4x4 NRA Outdoors (RUV)	2008	2008	009	002			
KRF	750	LE (RUV) C8F/D8F Teryx 4x4	2008	2008	009	002			
KRF	750	G9F/NAF/NBF/NCS/NDF Teryx 750 Fi 4x4	2009	2012	009	002			
KRF	750	J9FA/K9F/PAF/RAF/PBF/RBF/RCS/ PDF/RDF	2009	2013	009	002			
KRF	750	L9F Teryx 750 Fi 4x4 LE Sport	2009	2009	009	002			
KRF	750	M9F Teryx 750 Fi 4x4 NRA	2009	2009	009	002			
KRF	750	SAF/SAFA/SBF/SBFA/SCS/SCSA/SDF Teryx 750 Fi 4x4 Sport LE	2010	2013	009	002			
KRF	750	TAF/VBP Teryx Fi 4x4 SGO	2010	2011	009	002			
KRT	750	ACF/ADF (Tyrex 4 750 4x4)	2012	2013	009	002			
KRT	750	ACFA/ADFA (Tyrex 750 4x4 EPS)	2012	2013	009	002			
KRT	750	CCF/CDF (Tyrex 4x4 EPS LE)	2012	2013	009	002			
KVF	750	A1/A6F/B1/B6F Brute Force 4x4	2005	2006	009	002			
KVF	750	D8F/D9F/DAF/DBF	2008	2011	009	002			
KVF	750	E8FA Brute Force 4x4 Hardwoods Green HD	2008	2008	009	002			
KVF	750	GCF/GDF/GEF/GFF/GGF/GHF (Brute Force 7504x4i/EPS)	2012	2017	009	002			
KVF	750	HCF/HDF/HEF/HFF/HGF/HHF Brute Force 4x4i EPS/Camo	2012	2017	009	002			
KVF	750	JCF/JDF/JEF/JFF/JGF/JHF Brute Force 4x4i EPS	2012	2017	009	002			
KVF	750	LCF/LDF/LEF/LFF/LGF/LHF (Brute Force 750 4x4i)	2012	2017	009	002			
VN	750	A2-A5/A10	1986	1994	037	037			
Z	750	E1	1980	1980	127	127		127	
Z	750	H1/H2/LTD	1980	1981	127	127		127	
Z	750	L1/L2	1981	1982	127	127		127	
Z	750	LTD Twin (KZ750B/S/9972/0)	1982	1984	127	127		127	
Z	750	N1/N2 "Spectre"	1982	1983	127	127		127	
Z	750	Y1 (LTD)	1982	1982	127	127			
Z	750	K1/K2	1983	1984	037	037			
Z	750	L3	1983	1983	127	127		127	
Z	750	LTD Belt Drive (KZ750B/K/9972/0)	1983	1984	127	127		127	
Z	750	Sp. (KZ750E/R/B635/0)	1983	1983	127	127		127	
Z	750	E1/E1L/Turbo	1984	1984	037	037		037	
Z	750	L4	1984	1984	127	127		127	
Z	750	(ZR 750 J1/J2)	2004	2005	104	124		093	
Z	750	S (ZR 750 K1/K6F)	2005	2007	104	124		093	
Z	750	(ZR 750 L7F/L8F/L9F/LAF/LAB)	2007	2011	022	022		021	
Z	750	ABS (ZR 750 M7F/M8F/M9F/MAF/MBF)	2007	2011	022	022		021	
Z	750	R (ZR 750 NBF/NCF) (Non ABS)	2011	2012	249	249		020	
Z	750	R ABS (ZR 750 PBF/PCF)	2011	2012	249	249		020	
ZR	750	C1-C5 Zephyr	1991	1995	013	013		013	
ZR	750	D1 Zephyr	1996	1999	104	124		013	
ZR-7	750	(ZR 750 F1/F3/F5)	1999	2004	104	124		124	
ZR-7S	750	(ZR 750 H1/H2)	2001	2004	104	124		124	
ZX-7R	750		1989	1995	032	032		016	
ZX-7R	750	(ZX 750 P1/P2/P3/P4/P5/P6/P7)	1996	2003	039	039		016	
ZX-7RR	750	(ZX 750 N1/N2)	1996	1999	126	126		148	
ZXR	750	H1/H2/J1/J2	1989	1992	032	032		016	
ZXR	750	R (ZX750H/F102)	1990	1992	032	032		016	
ZXR	750	K1/L1/L2/L3/M1/M2	1993	1995	032	032		016	
ZXR	750	Ram-Air (ZX750L/G154)	1993	1995	032	032		016	
	750	Vulcan	1993	1993	037				
EJ	800	ABF/ACF (W800/SolidF/Disc)	2011	2012	124				
EJ	800	ACFA (W 800 Special Edition Black Exhaust / Gold Rims)	2012	2012	124				
EJ	800	ADF/AEF/AFF/AGF (W 800)	2013	2016	124				
KRF	800	BEF/BFF/FGF/FHF/FJF Teryx	2014	2018	009	002			
KRF	800	CEF/CFF/GGF/GHF/GJF Teryx LE	2014	2018	009	002			
KRF	800	DEF/DFF/HGF/HFF/HJF Teryx Camo	2014	2018	009	002			
KRT	800	BEF/BFF/FGF/FHF/FJF (Teryx 4)	2014	2018	009	002			
KRT	800	CEF/CFF/GGF/GHF/GJF Teryx 4 LE	2014	2018	009	002			
KRT	800	DEF/DFF/HGF/HHF/HJF Teryx 4 Camo	2014	2018	009	002			
VN	800	A1-A3	1995	1999	037				
VN	800	B1-B10/B6F/BDF Classic	1996	2006	104				
VN	800	C1/C2/E1/E2/E3 Drifter	1999	2004	104			124	
W	800	ABF	2011	2011	124				
W	800	Cafe Style/Cockpit fairing	2011	2011	124				
W	800	ACFA Special Edition Black Exhaust/ Gold rims	2012	2012	124				
W	800	ADF/AEF/AFF/AGF (EJ 800)	2013	2016	124				
W	800	Special Edition (ADFA/AEFA/AFFA/ AGFA) (EJ 800 Special Edition)	2013	2016	124				
Z	800	(Z800 ADS/AEF/AFF/AGF) (Non ABS)	2013	2020	207	207		020	
Z	800	(Z800 BDS/BEF/BFF/BGF) (ABS Model)	2013	2020	207	207		020	
Z	800	E (Z800 CDS/CEF/CFF/CGF) (Non ABS)	2013	2020	022	022		020	
Z	800	E (Z800 DDS/DEF/DFF/DGF) (ABS Model)	2013	2020	207	207		020	
KAF	820	AFF/AGF/AHF/AJF Mule Pro FXT	2015	2018	009	002			
KAF	820	BFF/BGF/BHF/BJF Mule Pro FXT/EPS	2015	2018	009	002			
KAF	820	CFF/CGF/CHF/CJF Mule Pro FXT /EPS LE	2015	2018	009	002			
KAF	820	DFF/DGF/DHF/DJF Mule Pro FXT/EPS Camo	2015	2018	009	002			
KAF	820	EGF/EHF/EJF Mule Pro FX	2016	2018	009	002			
KAF	820	FGF/FHF/FJF Mule Pro FX/EPS	2016	2018	009	002			
KAF	820	GGF/GHF/GJF Mule Pro FX/EPS LE	2016	2018	009	002			
KAF	820	HGF/HHF Mule Pro - FX/EPS Camo	2016	2017	009	002			
KAF	820	JGF/JHF Mule Pro - FXT Ranch Edition	2016	2017	009	002			
GPZ	900	R (A1-A6)	1984	1989	037	037		037	

Type	ccm		from	to	FL	FR	RL	RR	P
GPZ	900	R A7/A8	1990	1996	032	032		013	
GPZ	900	R (ZX 900 A11)	1998	1998	032	032		013	
GPZ	900	R (ZX 900 A12-15)	1999	2002	039	039		013	
VN	900	A6F Classic	2006	2006	104			124	
VN	900	B7F/B8F/B9F/BAF/BBF/BCF/BDF/BEF/ BFF/BGF/BHF/BJF Classic (Spoke wheel)	2007	2020	104			124	
VN	900	C7F/C8F/C9F/CAF/CBF/CCF/CDF/ CEFA/CFFA/CGF/CHF/CJF Custom (Cast wheel)	2007	2020	104			124	
VN	900	BBFA/BCFA/BDFA/BFFA Classic Special Edition/White wall Tyres Spoke Wheel	2011	2020	104			124	
Z	900	(ZR 900 AHF/AJF) (Non ABS)	2017	2020	207	207		020	
Z	900	(ZR 900 BHF/BJF/DJF) (ABS)	2017	2020	207	207		020	
Z	900	Café	2018	2020	213	213		020	
Z	900	RS	2018	2020	213	213		020	
Z	900	RS ABS (ZR 900 CJF/EJF ABS)	2018	2020	207	207		020	
Z	900	RS Café (CJFA/CJFB) (ABS)	2018	2020	207	207		020	
ZL	900	A1/A2 Eliminator	1985	1986	037	037		037	
ZX	900	A1, A1L	1983	1984	037	037		037	
ZX-9R	900	(ZX 900 F1/F2)	2002	2004	207	207		093	
ZX-9R	900	(ZX 900 B1/B2)	1994	1995	032	032		093	
ZX-9R	900	(ZX 900 B3/B4)	1996	1997	039	039		093	
ZX-9R	900	(ZX 900 C1/C2)	1998	1999	039	039		093	
ZX-9R	900	(ZX 900 E1/E2)	2000	2001	039	039		093	
ZX-9R	900	Ninja	2000	2001	039	039		093	
ZX-9R	900	Ninja (ZX900C/H884)	2002	2003	207	207		093	
GPZ	1000	RX (A1-A3)	1986	1988	037	037		037	
GTR	1000	(ZG 1000 A1-A7)	1986	1993	037	037		037	
H2	1000	Ninja (ZX 1000 NFF/NGF)	2015	2016	258	258		152	
H2	1000	R Ninja (ZX 1000 PFF/PGF)	2015	2016	258	258		152	
H2	1000	Ninja (ZX1000 XHF/XJF)	2017	2020	258	258		152	
H2	1000	Ninja Carbon (ZX1000 XHFA/XJFA)	2017	2020	258	258		152	
H2	1000	R Ninja (ZX1000 YHF/YJF)	2017	2020	258	258		152	
H2	1000	Ninja H2 SX (ZX1002 AJF)	2018	2020	213	213		334	
H2	1000	Ninja H2 SX SE (ZX1002 BJF)	2018	2020	213	213		334	
H2	1000	Ninja H2 SX SE+ (ZX1002 DKF)	2019	2020	258	258		334	
KAF	1000	AGF/AHF/AJF Mule Pro DXT/Diesel	2016	2018	009	002			
KAF	1000	BGF/BHF/BJF Mule Pro DXT Diesel EPS	2016	2018	009	002			
KAF	1000	CGF/CHF Mule Pro DXT EPS LE/Diesel	2016	2017	009	002			
KAF	1000	DGF/DHF Mule Pro DX/Diesel	2016	2017	009	002			
KAF	1000	EGF/EHF/EJF Mule Pro DX EPS/Diesel	2016	2018	009	002			
KAF	1000	FGF/FHF Mule Pro DX EPS LE/Diesel	2016	2017	009	002			
KLV	1000	(LV 1000 A1H/A2H)	2004	2005	104	124		021	
KLZ	1000	ACF/ADF/AEF/BFF/B6F Versys	2012	2018	032	032		021	
KLZ	1000	SE LT Versys (BJF) (ABS)	2018	2020	032	032		021	
KZ	1000	P6-P16	1987	1997	127	127		127	
Z	1000	(Z1F/A/9898/0)	1976	1978				076	
Z	1000	A1/A2/A3/A4	1977	1980				076	
Z	1000	D1/D3 (Z1R)	1978	1979				076	
Z	1000	ST (E1-E2 shaft)	1979	1982				076	
Z	1000	H1	1980	1980				076	
Z	1000	J1/J2/J3	1981	1983	127	127		127	
Z	1000	K1/K2 LTD	1981	1982	127	127		127	
Z	1000	R1/R2 (Eddie Lawson Replica)	1982	1983	127	127		127	
Z	1000	(ZR1000 A1/A2/A3)	2003	2005	207	207		093	
Z	1000	(ZR1000 B7F/B8F/B9F)	2007	2009	249	249		021	
Z	1000	ABS (ZR1000 C7F/C8F/C9F)	2007	2009	249	249		021	
Z	1000	(ZR1000 DAF/DBF/DCF/DDF/FEF/FFF)	2010	2015	213	213		093	
Z	1000	ABS (ZR1000 EAF/EBF/ECF/EDF/GEF/ GFF)	2010	2015	213	213		093	
Z	1000	DAF/DAS/DBF/DCF/DCFA/DDF/DDFA (Non ABS/300mm Discs)	2010	2013	213	213		093	
Z	1000	EAF/EBF/ECF/ECFA/EDF/EDFA (ABS/300mm Discs)	2010	2013	213	213		093	
Z	1000	SX (ZR 1000 GBF/GCF/GDF) (Non ABS)	2011	2013	213	213		093	
Z	1000	SX (ZX 1000 HBF/HCF/HDF) (ABS)	2011	2013	213	213		093	
Z	1000	Black Edition (ZR1000 DCFA/DDFA/ FEFA)	2012	2015	213	213		093	
Z	1000	(Rad.cal.)	2014	2014	213	213		093	
Z	1000	FEF/FEFA/FFF/FGF (Non ABS/310mm Discs)	2014	2020	213	213		093	
Z	1000	GEF/GEFA/GFF/GGF/HHF/HJF (ABS/310mm Round Discs)	2014	2020	213	213		093	
Z	1000	SE (Rad.cal.)	2014	2014	213	213		093	
Z	1000	Special Edition (ZR 1000 GEFA)	2014	2014	213	213		093	
Z	1000	SX (ZX 1000 LEF/LFF/LGF) (Non ABS)	2014	2016	213	213		093	
Z	1000	SX ABS Model (ZX 1000 MEF/MFF/MGF/ WHF/WJF)	2014	2018	213	213		093	
Z	1000	SX Tourer	2014	2014	213	213		093	
Z	1000	JHF/JJF (310mm Round Discs) (ABS)	2017	2020	258	258		093	
Z	1000	R JHF (310mm Round Discs) (ABS)	2017	2020	258	258		093	
Z	1000	H2	2020	2020	328	328		152	
ZL	1000	Eliminator	1986	1990	037	037		037	
ZL	1000	A1	1987	1987	037	037		037	
ZR	1000	A9-A14 (1000 GTR)	1994	1999	013	013		037	
ZX	1000	B1-B3 (ZX-10)	1988	1990	013	013		013	
ZX 10R	1000	Ninja SE	2018	2020	258	258		242	
ZX10-R	1000	Ninja ABS (ZX 1002 EKF/FKF)	2019	2020	258	258		242	
ZX-10R	1000	(ZX 1000 C1/C2/D6F/D7F)	2004	2007	200	200		093	
ZX-10R	1000	(ZX 1000 E8F/E9F/FAF)	2008	2010	213	213		093	
ZX-10R	1000	Ninja (Rad.cal.)	2010	2011	213	213		093	

Type	ccm		from	to	FL	FR	RL	RR	P
ZX-10R	1000	(ZX 1000 JBF/JCF/JDF/JEF/JFF)	2011	2015	213	213		242	
ZX-10R	1000	ABS (ZX 1000 KBF/KCF/KDF/KEF/KFF)	2011	2015	213	213		242	
ZX-10R	1000	30th Anniversary Edition (ABS) (ZX 1000 KFFA)	2015	2015	213	213		242	
ZX-10R	1000	30th Anniversary Edition (Non ABS) (ZX 1000 JFFA)	2015	2015	213	213		242	
ZX-10R	1000	Ninja ABS (ZX1000 SGF/SHF/SJF)	2016	2020	258	258		242	
ZX-10R	1000	Ninja KRT Replica (ZX1000 SGFA/SHFA/SJFA)	2016	2020	258	258		242	
ZX-10R	1000	Winter Test Edition (ZX1000 SGFB)	2016	2016	258	258		242	
ZX--10RR	1000	Ninja (ZX1000ZHF)	2017	2017	258	258		242	
GPZ	1100	B1/B2	1982	1983	127	127		127	
GPZ	1100	A1-A3	1983	1985	037	037		037	
GPZ	1100	E1/E2/F1	1995	1998	104	124		093	
GPZ	1100	ABS Horizont (ZXT10F/G936)	1997	1998	104	124		093	
Z	1100	A1-A3	1981	1983	127	127		127	
Z	1100	GP (KZT10B/C170/0)	1981	1982	127	127		127	
Z	1100	ST (KZT10A/C077/0)	1981	1983	127			076	
Z	1100	D1/D2 "Spectre"	1982	1983	127	127		127	
Z	1100	GP (KZT10B/C170)	1983	1983	037	037		037	
Z	1100	L1, LTD	1983	1983	127	127		127	
Z	1100	R1	1984	1984	037	037		037	
Z	1100	LTD (KZT10A/C077)	1985	1985	037	037		037	
ZN	1100	B1, B1L, LTD	1984	1984	037	037		037	
ZR	1100	A1-A4 "Zephyr"	1992	1995	032	032		013	
ZR	1100	B1 "Zephyr"	1996	1997	104	124		013	
ZR	1100	Zephyr (ZRT1100B/F989)	1997	1997	104	124		093	
ZR	1100	B5 (Zephyr 1100 RS)	2002	2002	104	124		013	
ZRX	1100	(ZR 1100 C1/C2/C3/C4)	1997	2000	039	039		016	
ZZR	1100	(ZX 1100 C1-C3)	1990	1992	032	032		013	
ZZR	1100	(ZX 1100 D1-D9)	1993	2001	032	032		016	
ZZR	1100	(ZXT10D/G203)	1994	1994	032	032		016	
ZZR	1100	(ZXT10D/G203)	1997	2001				016	
ZRX	1200	R (A1/A2/A3/A4/A5/A6F)	2001	2008	039	039		016	
ZRX	1200	S (B1-B3)	2001	2004	039	039		016	
ZX	1200	(ZX 1200 B3/B4/B6F)	2004	2006	200	200		016	
ZX-12R	1200	(ZX 1200 A1/A2/B1/B2)	2000	2003	039	039		016	
ZZR	1200	C1H/C2H	2002	2004	032	032		016	
Z	1300	A1-A5	1979	1983				076	
ZG	1300	A1-A3	1984	1986				076	
ZN	1300	A1, A2, A2L	1983	1984	037	037		037	
GTR	1400	(ZG 1400 A8F/A9F/CAF/CBF/CCF/CDF/CEF/EEF/EGF/EHF/EHJ)	2008	2020	249	249		148	
ZZR	1400	(ZX 1400 A6F/A7F)	2006	2007	249	249		148	
ZZR	1400	ABS (ZX 1400 B6F/B7F)	2006	2007	249	249		148	
ZZR	1400	ABS (ZX 1400 D8F/DAF/DBF/FCF/FDF/FEF/FFF/HGF/HHF/HJF)	2008	2020	249	249		148	
ZZR	1400	Special Edition (ZX 1400 FDFA/FEFA/FEFB/FFFA)	2012	2016	249	249		148	
ZZR	1400	Performance Sport (ZX 1400 JGF/JHF/JJF)	2014	2020	258	258		148	
VN	1500	B2-B6 (VN15SE)	1988	1992	037	037		037	
VN	1500	A6 (VN15)	1992	1992	037	037		037	
VN	1500	C1/C2 (VN15)	1994	1995	037	037		037	
VN	1500	D1/D2/E1/E2 "Classic"	1996	1999	104			037	
VN	1500	G1/G2 Classic Tourer	1998	1999	104	124		037	
VN	1500	J1/J2/R1/R2/R3 Drifter	1999	2004	104			124	
VN	1500	L1/L2/L3/L4 Nomad Fi	2000	2003	104	124		124	
VN	1500	N1/N2/N3 Classic Fi	2000	2004	104			124	
VN	1500	Mean Streak P1/P2	2002	2004	039	039		124	
VN	1600	A1/A2/A3/A6F Classic	2003	2008	104	124		124	
VN	1600	B1 Mean Streak	2004	2004	039	039		124	
VN	1600	B2H/B6F/B7F (Mean Streak)	2005	2008	200	200		124	
VN	1600	D1H/D6F Classic Tourer	2005	2008	104	124		124	
VN	1700	B9F/BAF/BBF/BCF/BDF/BEF/BFF/BGF/BHF/BJF Voyager (ABS)	2009	2020	032	032		124	
VN	1700	C9F Classic Tourer	2009	2009	104	124		124	
VN	1700	E9F Classic	2009	2009	104	124		124	
VN	1700	DAF/DBF/DCF/DDF/DEF Classic Tourer ABS	2010	2014	032	032		124	
VN	1700	FAF/FBF/FCF/FDF/FEF Classic ABS	2010	2014	032	032		124	
VN	1700	KBF/KCF/KDF/KEF Voyager Custom	2011	2014	032	032		124	
VN	1700	DFF/DGF Vulcan Nomad	2015	2016	032	032		124	
VN	2000	A1/A2/A6F	2004	2008	032	032		124	
VN	2000	H8F/H9F Classic	2008	2009	032	032		124	
		KAZUMA QUADS							
MF	90	Falcon			288	288		288	
		KEEWAY							
	25	/50 Matrix	2006	2006	042				
ARN	50	(25/45)	2010	2011	038				
RY6	50	(25/45)	2010	2011	136				
RY8	50	(All models)	2007	2010	136				
RY8	50	Racing (25/45)	2010	2011	136				
RY8	50	SP (25/45)	2010	2011	136				
TX	50		2010	2012	122			096	
X RAY	50	Supermoto	2007	2009	122			096	
X-WAY	50	Supermoto	2006	2006	096				
	50	Agora (4T)	2010	2015	011				
	50	F-Act	2007	2010	136				
	50	F-Act Cty (2T)	2009	2015	136			047	

Type	ccm		from	to	FL	FR	RL	RR	P
	50	F-Act Evo City (2T)	2009	2015	136				
	50	F-Act Evo DD (2T)	2009	2015	136				
	50	F-Act Nkd	2009	2011	136				
	50	F-Act Racing (24/25)	2010	2012	136				
	50	F-Act RS	2010	2011	136				
	50	Flash	2007	2010	047				
	50	Flash Electric	2009	2010	136				
	50	Focus	2006	2007	136				
	50	Goccia (2T/4T)	2008	2015	098, 107				
	50	Hacker	2008	2010	038				
	50	Hurricane	2007	2014	047				
	50	Hurricane Base	2007	2007	047				
	50	Matrix	2006	2012	136				
	50	Matrix V4 (25/50)	2010	2011	136				
	50	Pixel	2008	2012	047				
	50	Swan (25/45)	2010	2011	136				
	50	Zahara (2T/4T)	2013	2015	011				
	100	F-Act	2008	2010	136				
	100	Partner	2006	2006	088				
	110	Kee	2012	2014	011				
	110	Partner	2006	2007	334				
ARN	125		2006	2012	038				
K2	125		2007	2007	293			293	
RKS	125		2010	2011	011				
RKS	125		2012	2015	332				
RKV	125		2010	2014	361			150	
RKV	125	Euro 4	2016	2019	394			332	
RKX	125		2013	2014	141				
TX	125		2010	2012	122			096	
TX	125	SM (17"FW)	2013	2015	122			150	
TX	125	TXM	2016	2019	394			150	
	125	Cityblade	2013	2014	334			150	
	125	Cityblade EURO4	2016	2019	394			150	
	125	Enduro	2007	2007				038	
	125	F-Act	2007	2011	136				
	125	Focus	2006	2007	047				
	125	Hacker	2008	2010	038				
	125	i Silverblade	2013	2015	334	332			
	125	Link	2013	2014	011			011	
	125	Logik	2013	2015	334			334	
	125	Logik	2017	2019	394				
	125	Matrix	2007	2010	136				
	125	Outlook	2007	2010	334			334	
	125	Silverblade	2007	2007	031			152	
	125	Silverblade	2010	2011	332			332	
	125	Speed	2006	2007	289			088	
	125	Speed	2007	2012	289			289	
	125	Strike	2013	2014	011				
	125	Superlight Euro 4	2017	2019	394				
	125	Superlight LTD	2007	2015	334				
	125	X-Ray	2007	2007				038	
	125	Zahara (2T/4T)	2013	2015	011				
ARN	150		2006	2010	038				
K2	150		2007	2007	293			293	
RKS	150		2012	2014	332				
RKV	150		2013	2014	361			150	
RKX	150		2013	2014	361			150	
	150	Cityblade	2013	2015	334			137	
	150	F-Act	2007	2010	136				
	150	Focus	2006	2006	136				
	150	Hacker	2008	2010	038				
	150	Logik	2013	2015	334			334	
	150	Matrix	2007	2010	136				
	150	Outlook	2007	2010	334			334	
	150	Silverblade	2007	2007	031			152	
	150	Speed	2006	2006	289			088	
	150	Speed	2007	2012	289			289	
	150	Strike	2013	2014	011				
	150	Superlight	2007	2010	334				
KXM	200		2014	2014	031			150	
KXV	200		2014	2014	031			150	
RKS	200		2012	2014	332				
RKV	200	S	2014	2014	361			150	
RKV	200	S Factory	2014	2014	361			150	
RKX	200		2013	2014	361			150	
TX	200	(19" F/wheel)	2013	2014	122			150	
	200	i Link	2013	2014	011			011	
K2	250		2007	2007	293			293	
	250	Cruiser	2009	2014	334				
	250	Dragon Quad	2007	2009	047	047		144	
	250	i Blackster	2014	2015	334			332	
	250	i Silverblade	2013	2014	334	332			
	250	Silverblade	2007	2007	031			152	
	250	Supershadow	2006	2006	099				
GTX	300	Quad	2010	2011				294	
	350	i Index	2013	2014	334			047	

Type	ccm		from	to	FL	FR	RL	RR	P
		Matrix Electric	2009	2010	136				
		KENTOYA							
	200	Trigger	2004	2004				011	
		KM (KEENMOTORBIKES)							
	50	Badboy CX	2005	2005	136				
	100	Badboy CX	2005	2005	136				
		KRAM-IT							
	50	Scrambler						094	
ER	125	/250/300 RV3	1988	1988	006			084	
GS	250		1997	1997	031			023	
GS	250		2000	2000	031			023	
MC	250		1989	1989	006			094	
MX	250		1997	1997	031			023	
SM	250		2000	2000	031			023	
SMR	250		2000	2000				023	
ER	300		1989	1989	006			094	
ER	500		1996	1996	006			084	
ER	600		1996	1996	006				
		KREIDLER							
		e-Florett 1.00 (3.0kW)	2014	2015	011			047	
		e-Florett 3.00 (4.0kW)	2014	2015	011			047	
RS	50	Galactica 3.0 (2T/A-C)	2014	2015	011			137	
	50	City (50cc/2T/A-C)	2014	2015	136				
	50	Florett	1999	2011	042				
	50	Florett 2.1 RS (2T/A-C)	2014	2015	136				
	50	Florett City (2T/A-C)	2014	2015	136				
	50	Flory Classic (50cc/4T/A-C)	2014	2015	011				
	50	Galactica 3.0 LC (2T/L-C)	2014	2015	011			137	
	50	Supermoto (2T)	2014	2015	334			332	
	50	Vabene	2012	2012	136				
	125	Enduro (4T)	2014	2015	334			144	
	125	Insignio (4T)	2014	2015	332	334			
	125	Mustang			184				
	125	Street DD	2012	2013				020	
	125	Supermoto (4T)	2014	2015	334			144	
	125	Supermoto DD	2012	2013	002				
	250	Insignio (4T)	2014	2015	332	334			
		KTM							
E-SM		Freeride	2015	2017	307			297	
E-SX		Freeride	2015	2017	307			297	
E-XC		Freeride	2015	2020	307			297	
MX		125-600 ccm.	1991	1992	005			084	
SX-E		5 Electric	2020	2020	190			190	
		Enduro Models	1989	1991	026			026	
		GS, EXC, Enduro models	1991	1993	026			084	
		Most 1988 Models	1988	1988	026			026	
		Most Models	1987	1987	019			019	
CR	50	Senior Pro	2005	2005				190	
GO	50	(KTMGO50/G812)	1994	1994	115				
GP	50	DXL, RS1			038				
GXE	50		1987	1987	038				
GXE	50	(KTM50GXE/E215)	1989	1989	083				
GXR	50		1989	1989	083	083			
MX	50		1987	1990	038				
MX	50		1991	1991	083				
SX	50		2006	2020	190			190	
SX	50	Junior	2002	2013	190				
SX	50	Mini	2008	2020	190			190	
SX	50	Pro Senior LC	2002	2003	190				
SX	50	Pro Senior LC (12" F/wheel)	2004	2020	190			190	
	50	Comet PL, TS, RLW, RS, RS4L (KTM50PL/ D548/A)	1986	1991	038				
	50	Supermoto	2006	2006	190			190	
SX	60		1998	2000	121				
SX	65		1998	2001	121				
SX	65		2002	2003	185				
SX	65		2004	2008	185			190	
SX	65		2009	2020	185			185	
MX	80		1986	1992	083				
PL	80	Watercooled			008			008	
RLW	80		1980	1980	008			008	
	80	RSL, L, RS, RL, Bora, Chopper	1980	1980	008			008	
MX	85		1990	1990	008				
SX	85	(17"/14" wheels)	2003	2010	185			185	
SX	85	(17"/14" wheels)	2011	2011	185			297	
SX	85	(17"/14" wheels - 220mm F/Disc/Radial Caliper)	2012	2015	307			297	
SX	85	(17"/14" wheels - 240mm F/Disc/Radial Caliper)	2016	2020	307			297	
SX	85		2021	2021	031			191	
SX	85	(19"/16" wheel)	2011	2011	185			185	
SX	85	(19"/16" wheels - 220 F/Disc/Radial Caliper)	2012	2012	307			297	
SX	85	(19"/16" wheels - 240mm F/Disc Caliper)	2013	2020	307			297	
SX	85	(19"/16" wheels)	2003	2010	185			185	
SX	85	(Aftermarket Caliper used with 220mm Disc)	2003	2017				346	

Type	ccm		from	to	FL	FR	RL	RR	P
D-XC/E-XC/E-GS	125		1990	1991	005			005	
D-XC/E-XC/E-GS	125	Brembo Calipers	1992	1993	031			005	
D-XC/E-XC/E-GS	125	Grimeca Calipers	1990	1991	026			026	
D-XC/E-XC/E-GS	125	Grimeca Calipers	1992	1993	026			005	
EGS	125		1994	1994	031			023	
EXC	125		1989	1989	026			026	
EXC	125		1994	2003	031			023	
EXC	125		2004	2017	031			191	
EXC	125	(2T) Six Days	2011	2017	031			191	
EXC	125	Brembo Calipers	1989	1989	005			005	
EXE	125		2000	2000	031			023	
GS	125		1988	1988	026			026	
GS	125		1992	1992	031			084	
GSXC/GS	125		1985	1985	038				
LC	125		1985	1985	038				
LC	125		1986	1986	038			038	
LC2	125		1996	1998	031			023	
MX	125		1985	1985	038				
MX	125		1986	1986	038			038	
MX	125		1989	1991	026			026	
MX	125		1990	1993	031				
MX	125	Brembo Calipers	1989	1991	005			005	
MX	125	Brembo Calipers	1992	1993	031			005	
MX	125	Grimeca Calipers	1992	1993	026			005	
MX/MXC	125		1985	1985	038				
MX/MXC/GS	125		1986	1986	038			038	
RC	125		2014	2019	305			023	
SM	125	Supermoto	2000	2000	031			023	
SX	125		1994	1999	031			023	
SX	125	(Upside Down Forks)	2000	2003	031			023	
SX	125	(Upside Down Forks)	2004	2008	031			191	
SX	125	(Upside Down Forks)	2009	2020	031			191	
XC	125		1985	1985	038				
XC	125		1986	1986	038			038	
XC-W	125	(2T)	2017	2020	031			191	
	125	/250/300/600 Enduro	1992	1993	026				
	125	/250/400/600 LC Models	1989	1991	026			026	
	125	/350 E/XL/GS	1990	1991	026			026	
	125	Duke (4T)	2011	2018	305			023	
	125	Sting	1997	1999	064			023	
SX	150		2008	2008	031			191	
SX	150		2009	2020	031			191	
SX	150	(Upside down Forks)	2009	2020	031			191	
XC	150	(USD)	2011	2013	031			191	
XC-W	150	(2T)	2017	2020	031			191	
XC-W	150	(2T) Inc Tpi	2017	2020	031			191	
	200	Duke (4T)	2012	2015	305			023	
EGS	200		1994	1997	031				
EGS	200		1998	2003	031			023	
EXC	200		1994	1997	031				
EXC	200		1998	2003	031			023	
EXC	200	(inc Six Days)	2004	2016	031			191	
MXC	200		1998	2003	031			023	
RC	200		2014	2015	305			023	
XC-W	200		2006	2009	031				
XC-W	200		2012	2012	031				
DXC/EXC	250	5-0	1990	1990	026			026	
D-XC/E-XC/E-GS	250		1991	1991	026			026	
D-XC/E-XC/E-GS	250	Brembo Calipers	1991	1991	005			005	
D-XC/E-XC/T-XC/E-GS	250	Grimeca Calipers	1992	1993	026			026	
EGS	250		1994	1994	031			023	
EXC	250		1990	1994	026			026	
EXC	250		1994	2003	031			023	
EXC	250		1995	2003	031			023	
EXC	250		2004	2020	031			191	
EXC	250	(2T) Six Days	2011	2020	031			191	
EXC	250	4T	2004	2005	031			191	
EXC	250	Enduro, enduro 4T	1999	2003	031			023	
EXC	250	Racing	2006	2006	031			191	
EXC/EGS	250		1988	1989	026			026	
EXC/EGS	250	Brembo Calipers	1989	1989	005			005	
EXC-F	250		2006	2020	031			191	
EXC-F	250	(4T) Six Days	2011	2020	031			191	

Type	ccm		from	to	FL	FR	RL	RR	P
GS	250		1988	1988	026			026	
GSXC/ GS	250		1985	1985	038				
LC	250		1985	1985	038				
LC	250		1986	1986	038			038	
MC	250		1983	1984	038			038	
MX	250		1983	1984	038			038	
MX	250		1985	1985	038				
MX	250		1986	1986	038			038	
MX	250		1988	1991	026			026	
MX	250		1992	1993	031				
MX	250	Brembo Calipers	1989	1991	005			005	
MX	250	Brembo Calipers	1992	1993	031			005	
MX	250	VC, Enduro	1987	1987	019			019	
MX/ MXC	250		1985	1985	038				
MX/ MXC/ GS	250		1986	1986	038			038	
SX	250		1994	2002	031			023	
SX	250	(2T) (Upside Down Forks)	2009	2020	031			191	
SX	250	(2T/Std forks)	1994	1999	031				
SX	250	(2T/Upside down forks)	2003	2008	031			191	
SX-F	250	(4T)	2006	2020	031			191	
SX-F	250	Ken Roczen Edition	2012	2012	031			191	
XC	250		1985	1985	038				
XC	250		1986	1989	038			038	
XC	250	(2T) Inc Tpi	2019	2020	031			191	
XC	250	(USD)	2011	2020	031			191	
XC-F	250	(USD)	2011	2017	031			191	
	250	/300 E/XC/GS	1990	1991	026				
	250	Baja	1986	1986	038				
	250	Country, Baja	1985	1985	038				
	250	Duke	2015	2020	305			023	
	250	Freeride (2T)	2014	2015	307			297	
EXC	300		2000	2003	031			023	
EXC	300		2004	2020	031			191	
EXC	300	(2T) Inc Tpi Six Days & Erzbergrodeo	2011	2020	031				
EXC	300	(2T) Six Days	2011	2020	031			191	
EXC	300	(Upside Down Forks)	2000	2020	031				
EXC	300	E (Electric Start)	2008	2019	031			191	
GS	300		1990	1993	026			026	
GS	300		1995	1996	031			023	
GS	300	Enduro	1993	1994	031			084	
GSXC/ GS	300		1985	1985	038				
MX	300		1990	1990	005			084	
MX	300		1992	1992	031			084	
MX/ MXC	300		1985	1985	038				
MX/ MXC/ GS	300		1986	1986	038			038	
XC	300		1985	1985	038				
XC	300		1986	1990	038			038	
XC	300	(2T)	2011	2020	031			191	
DXC/ EXC/ EGS	350		1990	1991	026			026	
DXC/ EXC/ EGS	350	(Brembo Calipers)	1990	1991	005			005	
EXC	350		1987	1987	019			019	
EXC	350		1988	1988	026			026	
EXC	350		1989	1989	026			026	
EXC	350		1994	1995	031			023	
EXC	350	Brembo Calipers	1989	1989	005			005	
EXC	350	LC4	1994	1995	031				
EXC-F	350	(USD)	2011	2020	031			191	
EXC-F	350	Six Days	2012	2020	031			191	
GS	350		1987	1987	019			019	
GS	350		1988	1991	026			026	
GS	350		1993	1993	031				
GS4	350	500 K4		1983	038				
K4	350	500 K4		1983	038				
LC4	350		1992	1992	005			084	
MX	350		1987	1987	019			019	
MX	350		1988	1991	026			026	
MX	350	Brembo Calipers	1989	1991	005			005	
MX/ EXC/ EGS	350		1988	1988	026			026	
MX/ MXC/ GS	350		1986	1986	038			038	
SX-F	350	(Upside down Forks)	2011	2015	031			191	
SX-F	350	Six Days Diaphragm Spring	2012	2012	031			191	
SX-F	350	Tony Cairoli Edition	2012	2012	031			191	
XC	350	MC		1983	038				
XC-F	350		2012	2020	031			191	
	350	Country Cross	1985	1985	038				
	350	Four Stroke	1983	1983	038				

Type	ccm		from	to	FL	FR	RL	RR	P
	350	Freeride (4T)	2012	2015	307			297	
EXC	360		1996	1997	031			023	
MX	360		1996	1997	031			023	
SX	360		1996	1997	031			023	
EXC	380		1998	2003	031			023	
MXC	380		1998	2001	031			023	
SX	380		1998	2003	031			023	
RC	390		2014	2016	305			023	
RC	390		2017	2020	305			023	
	390	Adventure	2019	2020	305			023	
	390	Duke (300mm F/Disc)	2013	2017	305			023	
	390	Duke (320mm F/Disc)	2018	2020	305			023	
	390	Duke (4T)	2015	2015	305			023	
EGS	400		1996	1999	031			023	
EGS	400	(USD)	2000	2003	031			023	
EGS-E	400		1996	1999	031			023	
EXC	400		2004	2011	031				
EXC	400	(4T)	2009	2011	031			191	
EXC	400	(USD)	2000	2003	031			023	
EXC	400	Racing	2000	2003	031			023	
EXC	400	Racing	2004	2007	031			191	
LC4	400		1993	1999	031			084	
LC4	400	/620 Supermoto with 320 mm disc	1994	1998	031			084	
LC4-E	400	Enduro	2000	2001	031			023	
LSE	400		1996	1999	031			023	
SC	400		1996	1999	031			023	
SX	400		2000	2002	031			023	
SXC	400	Tiainen replica	1999	1999	031			023	
XC-W	400		2007	2009	031			191	
	400	Duke LC4	1994	1998	064			023	
	400	Enduro	1987	1987	019			019	
XC	420	MC		1983	038				
EXC	440		1994	1995	031			023	
SX	440		1994	1995	031			023	
EXC	450		2003	2003	031			023	
EXC	450	(4T)	2004	2008	031			191	
EXC	450	(4T)	2009	2011	031			191	
EXC	450	(4T)	2012	2020	031			191	
EXC	450	(4T) Six Days	2011	2020	031			191	
EXC	450	Racing	2006	2007	031			191	
EXC-R	450	(4T)	2008	2008	031			191	
SMR	450		2004	2004	212				
SMR	450		2005	2006	231			191	
SMR	450	(Magura Caliper)	2007	2013	238			191	
SMR	450	(Brembo F/caliper)	2014	2014	258			191	
SX	450		2003	2007	031			191	
SX	450	F	2008	2015	031			191	
SX	450	SM Factory replica	2004	2004	064			191	
SX	450	SMR	2004	2004	064			191	
SX-F	450	(4T)	2007	2015	031				
SX-F	450	(Quad)	2009	2011	261	261		260	
SXS	450		2004	2010	031			191	
XC	450	(Quad)	2008	2010	261	261		260	
XC-F	450		2008	2012	031			191	
XC-F	450		2013	2019	031			191	
	450	Rally	2017	2020	106			023	
MC	495	Leleu	1982	1983	038				
MX	495	Leleu	1982	1983	038				
EXC	500	(4T)	2012	2020	031			191	
EXC	500	(4T) Six Days	2012	2020	031			191	
GS	500	K4 Enduro	1983	1983	038				
LC	500		1985	1985	038				
LC	500		1986	1986	038			038	
LC-4	500	EXC (Brembo Calipers)	1990	1991	005			005	
LC-4	500	MX (Brembo Calipers)	1990	1991	005			005	
LC-4 MX/EXC	500		1989	1991	026			026	
MX	500		1985	1985	038				
MX	500		1986	1986	038			038	
MX	500		1987	1987	019			019	
MX	500		1988	1988	026			026	
MX	500		1992	1994	031			005	
MX	500		1995	1995	031			023	
MXC/ XC-GS	500		1985	1985	038				
SX	500		1993	1995	031			023	
XC	500	MC		1983	038				
SX-F	505		2007	2009	031			191	
SX-F	505	(Quad)	2009	2012	261	261		260	
EXC	520		2001	2003	031			023	
MXC	520		2001	2002	031			023	
SX	520		2001	2003	031			023	
EXC	525		2002	2003	031			023	
EXC	525		2004	2005	031			191	
EXC	525	Racing	2004	2006	031			191	
MXC	525		2004	2004	031			023	

Type	ccm		from	to	FL	FR	RL	RR	P
MXC	525	Desert Racing	2003	2004	031			023	
SMR	525		2004	2004	212			191	
SMR	525		2005	2005	231			191	
SX	525		2003	2006	031			191	
SX	525	Racing	2004	2006	031			191	
SX	525	SMR	2004	2004	064			191	
XC	525	(Quad)	2008	2012	261	261		260	
XC	525	Racing	2006	2007	031			191	
EXC	530		2009	2011	031			191	
EXC	530	(4T) Six Days	2011	2011	031			191	
EXC-R	530	(4T)	2008	2008	031			191	
SXC	540	Tiainen replica	1999	1999	031			023	
LC4	550		1987	1987	019			019	
MX	550		1987	1987	019			019	
MXC	550		1996	1996	031			023	
SMR	560		2007	2007	238			191	
4T	600	Enduro	1984	1985	038				
GS	600		1985	1986	038				
GS	600		1993	1994	031			023	
LC4	600		1988	1989	005			005	
LC4	600	Enduro	1990	1992	026			005	
LC4	600	EXC	1992	1993	026			005	
LC4	600	EXC (Brembo Calipers)	1990	1991	005			005	
LC4	600	MX (Brembo Calipers)	1990	1991	005			005	
LC4	600	Six Days	1992	1992	026			005	
LC-4 EXC	600		1992	1993	026			005	
LC-4 MX/EXC	600		1989	1991	026			026	
MX	600		1990	1991	026			026	
XC	600	Cross	1985	1985	038				
XCE	600	Cross	1985	1985	038				
EGS	620	Enduro	1996	1999	031			023	
EGS-E	620	Adventure-Rallye	1999	1999	031			023	
EGS-E	620	Enduro	1996	1999	031			023	
LC4	620	Adventure	1997	1998	031			023	
LC4	620	Competition	1996	1998	031			023	
LC4	620	RXC	1995	1995	031			023	
LC4	620	SC Supercompetition	1999	1999	031			023	
LC4	620	SC Supermoto	1999	2001	031			023	
LC4	620	Supercompetition	1995	2001	031			023	
LSE	620	Enduro	1996	1999	031			023	
SC	620	Supercompetition	1996	2000	031			023	
SX	620		1996	1998	031			023	
SX	620	EXC/EGS	1994	1994	031			005	
SX	620	EXC/EGS	1995	1995	031			023	
	620	Duke LC4	1994	1998	064			023	
LC4	625	SC	2002	2006	031			023	
LC4	625	SC Supercompetititon	2002	2002	031			023	
LC4	625	SC Supermoto	2002	2002	031			023	
SMC	625		2004	2006	141			023	
SXC	625		2003	2004	031			023	
SXC	625		2005	2006	031			191	
LC4	640	Adventure	2001	2002	031			023	
LC4	640	Adventure	2003	2003	031	031		023	
LC4	640	Adventure	2005	2007	106	106		023	
LC4	640	Adventure R	1999	2002	031			023	
LC4	640	Adventure R	2004	2004	106			023	
LC4	640	SC	1999	2006	031			023	
LC4	640	SC Supermoto	2003	2006	141			023	
LC4	640	Supermoto	1999	2002	141			023	
LC4-E	640		2003	2006	141			023	
LC4-E	640	(2 pin fixing)	2004	2006	141			023	
LC4-E	640	(Central single pin fixing)	2003	2003	064			023	
LC4-E	640	Enduro	2000	2004	031			023	
LC4-E	640	Supermoto	2000	2006	031			023	
R	640	Adventure	1999	2002	031			023	
SMC	640	LC4	2005	2005	141			023	
	640	Duke II (2 pin pad fixing / Disc with Zero Offset)	1999	2002	141			023	
	640	Duke II (2 pin pad fixing/disc with offset)	2003	2007	141			023	
	640	Duke-E (Single pin pad fixing)	1998	1998	064	064		023	
SMR	650	Supermoto	2006	2006	231			191	
LC4	660	Factory Replica	2005	2006	141			023	
LC4	660	Rallye	2001	2006	031			023	
SMC	660		2005	2006	141			023	
SMC	660	Supermoto	2003	2004	064	064		023	
LC4	690	Supermoto	2007	2007	141			023	
SM	690		2007	2009	141			023	
SM	690	LE (Limited Edition)	2010	2011	141			023	
SM	690	Prestige	2007	2007	177			023	
SMC	690		2008	2010	177			023	
SMC	690	R	2012	2013	177			023	
SMC	690	R (ABS)	2014	2020	177			023	
SMR	690	(4 Pad Type Caliper/Cast Wheel)	2007	2011	177	177		023	
	690	Duke (2-pin Pad Fixing) (Multi Spoke Cast Wheels)	2013	2020	141			023	

Type	ccm		from	to	FL	FR	RL	RR	P
	690	Duke	2008	2011	177			023	
	690	Duke (2 pin pad fixing / 5 Spoke Cast Wheels)	2012	2012	141			023	
	690	Duke R (5 Spoke Cast Wheels)	2010	2011	177			023	
	690	Enduro	2008	2020	106			023	
	690	Enduro R	2009	2010	106			023	
	690	Enduro R	2011	2020	106			023	
	690	Enduro R (ABS)	2014	2020	106			023	
	690	R Duke (Multi Spoke Cast Wheels)	2013	2018	258			023	
	690	Rally Factory Replica	2007	2009	106			023	
	790	Adventure R	2018	2020	141	141		023	
	790	Duke	2018	2020	141	141		023	
	890	Duke R	2020	2020	328	328		023	
	950	Adventure	2002	2006	106	106		031	
	950	Adventure S	2003	2006	106	106		031	
	950	Duke	2003	2003	177	177		023	
	950	R Superenduro	2006	2008	106	106		031	
	950	Supermoto	2005	2007	177	177		031	
LC8	990	Adventure (Non ABS)	2009	2012	106	106		031	
LC8	990	Adventure Dakar Edition (ABS)	2011	2011	106	106		031	
SM-R	990	Supermoto R	2008	2009	177	177		031	
SM-R	990	Supermoto R	2010	2013	258	258		031	
SM-T	990	Supermoto T	2009	2013	177	177		031	
	990	Adventure R (Non ABS)	2009	2012	106	106		031	
	990	Adventure S (Non ABS)	2006	2008	106	106		031	
	990	Superduke	2005	2011	177	177		023	
	990	Superduke R	2007	2013	177	177		023	
	1050	Adventure	2015	2020	141	141		031	
	1090	Adventure inc R	2017	2020	141	141		031	
RC8	1190		2008	2011	258	258		152	
RC8	1190	R	2009	2015	258	258		152	
RC8	1190	Track (1190cc)	2009	2015	258	258		152	
	1190	Adventure	2013	2020	141	141		031	
	1190	Adventure R	2013	2020	141	141		031	
	1290	Super Adventure inc R and S	2015	2020	141	141		031	
	1290	Super Duke GT	2016	2020	258	258		152	
	1290	Super Duke R	2014	2020	258	258		152	
	1290	Super Duke R SE	2016	2018	258	258		152	
		KYMCO							
	25	/50 Matrix	2006	2008	136				
CX	50	Super (PR50AC)	1994	1997	071				
DJ	50	S	2012	2015	183				
DJW	50	World (PR50AD)	1995	1997				136	
K12	50	Sport (SE10CA)	1995	2000	071				
KB	50	(SE10CA)	1995	2000	071				
KB	50	Scout	1997	1997	071				
MXER	50		2000	2000				183	
MXU	50	Quad (2T)	2005	2014				183	
RS	50	Agility Naked (2T/12" wheels)	2010	2014	334				
SR	50	Active	2008	2011	011				
ZX	50	Fever	1996	1996	071				
ZX	50	Super Fever/Scout	1999	2006	071				
ZX12	50		2006	2006	071				
	50	Activ	2004	2006	332				
	50	Agility (KG10SA)	2005	2008	334				
	50	Agility Carry (4T)	2011	2018	183				
	50	Agility City+ (4T)	2018	2020	334				
	50	Agility R10 (4T) (CV 50QT S) 10" wheels	2006	2014	334				
	50	Agility R12 (4T) (CV 50QT S) 12" wheels	2006	2014	334				
	50	Agility R16 (2T/16" wheels)	2008	2015	183				
	50	Agility R16 (4T/16" wheels)	2008	2015	183				
	50	Bet & Win / Dink Sports 50	2002	2006	332				
	50	Calypso	1997	1997	136				
	50	Cobra Cross	1999	2000	003				
	50	Cobra Cross	2000	2006	071				
	50	Cobra Exclusive	2001	2001	071				
	50	Cobra Racer	1999	2000	071				
	50	Cobra Racer (SF10AG)	2000	2006	071				
	50	Dink	1998	2006	332				
	50	Dink (4T)	2007	2014	332				
	50	Dink Classic Euro 2	2003	2003	332				
	50	Dink Sports	2002	2006	009				
	50	Easy	2001	2001	071				
	50	Filly LX	2000	2002	071				
	50	Filly LX (S210)	2000	2006	334				
	50	Grand Dink (2T)	2004	2015	332				
	50	Grand Dink 50 S	2012	2013	332				
	50	Heroism (SE10BA)	1995	1997	136				
	50	i Kymcosento	2013	2013	332				
	50	i Newsento	2013	2013	332				
	50	Jetix	2008	2009	011				
	50	Jetix	2010	2015	011			332	
	50	K-Pipe	2012	2012	332				
	50	Like (2T)	2009	2009	183				
	50	Like (2T)	2010	2015	334				
	50	Like (4T)	2009	2009	183				

Type	ccm		from	to	FL	FR	RL	RR	P
	50	Like LX (4T)	2010	2015	334				
	50	Looker	2007	2008	183				
	50	Looping	1998	1998	071				
	50	Manboy	1995	1995	161				
	50	New Dink	2008	2008	088				
	50	Nexxon	2008	2009	011			011	
	50	People (2T) (3 bolt fixing)	1999	2014	183				
	50	People S (2T) (5 bolt fixing)	2005	2015	183				
	50	People S (4T) (B91000) (5 bolt fixing)	2006	2020	183				
	50	Sento	2008	2015	334				
	50	Sniper (PR 50 B)	1993	1993	071				
	50	Sniper DD (PR50BB)	1994	1996	071			131	
	50	Spacer	1998	2006	332				
	50	Super 8 (2T)	2007	2015	183				
	50	Super 8 (4T)	2007	2020	183				
	50	Super 9 (A/C)	2000	2007	332				
	50	Super 9 (LC) (SH10DA)	2000	2007	332			183	
	50	Top Boy (SF10GG)	1996	2006	071				
	50	Visa R	2011	2015	005				
	50	Vitality (2T) (SF10FA)	2004	2009	334				
	50	Vitality (4T) (U31000)	2004	2009	334				
	50	Yager	1998	2006	332				
	50	Yager	2007	2007	332				
	50	Yup	2001	2009	334				
	50	Zap (Disc Brake version)	1995	1995	161				
KXR	90	/S Mongoose	2004	2020				183	
SP	90	Yup	1995	1995	334				
	90	Manboy	1996	1996	003				
	90	Maxxer	2005	2006				183	
KB	100	Manboy	1999	2000	071				
	100	Cobra Racer	1999	2003	334				
	100	Spike	2000	2006	011				
	100	Top Boy	1997	1997	071				
	110	Activ	2004	2006	332				
	110	Visa R	2011	2015	005				
CK	125	Pulsar	1999	2000	344				
CK	125	Pulsar S	2011	2015	332				
CK	125	Pulstar (RJ25CB)	2001	2007	332				
CK	125	Pulstar 11 (KE25RF)	2008	2010	332				
CK 1	125	(4T/KT25AA)	2014	2015	332				
DJ	125	S	2012	2013	183				
KR	125	Quannon Naked	2010	2015	332			332	
KR	125	Quannon Sport	2007	2013	332			332	
K-XCT	125	i	2012	2015	022			355	
RS	125	Agility (4T-12"wheels/ 5 Spooke)	2009	2010	183				
RS	125	Agility (4T-12" wheels/ 5 Spooke)	2010	2015	334				
	125	Activ	2004	2006	332				
	125	Agility (C20000) (16" wheels)	2008	2015	183			005	
	125	Agility 4T (U62000/1 - 12" Wheels/3 Spoke)	2006	2014	334				
	125	Agility Carry (4T)	2011	2015	183				
	125	Agility City	2018	2020	183			005	
	125	Agility City+	2018	2020	183			005	
	125	Agility RS (2T/12" Wheels)	2009	2013	183				
	125	Bet & Win	2000	2006	332			332	
	125	Calypso	1999	1999	136				
	125	Cruiser	1999	1999	332				
	125	Dink	1997	2004	332			332	
	125	Dink Classic	2002	2002	332			332	
	125	Dink LX	1998	2000	332			332	
	125	Grand Dink	2012	2013	022			332	
	125	Grand Dink	2014	2015	022				
	125	Heroism (SE25BA)	1995	1997	136				
	125	Hipster	1999	2006	332				
	125	i Dink	2006	2015	332			332	
	125	i Downtown (C21000)	2009	2015	022			302	
	125	i People One	2013	2015	183				
	125	i Super Dink (C21000)	2009	2015	022			302	
	125	i X Town ABS	2016	2020	193			355	
	125	Jetix	2010	2015	011			332	
	125	K-Pipe	2013	2015	332				
	125	Like (D20000)	2009	2009	183			332	
	125	Like (LX)	2010	2020	334			332	
	125	Looker S	2007	2008	183				
	125	Matrix	2006	2008	136				
	125	Miler	2001	2007	009			009	
	125	Movie	1999	2000	334				
	125	Movie i	2012	2013	332				
	125	Movie XL	2001	2009	332				
	125	New Dink	2008	2008	088			088	
	125	New Downtown i	2015	2020	193			355	
	125	New X Town i (ABS)	2016	2020	193			355	
	125	Nexxon	2007	2008	011			011	
	125	People	1999	2014	183				
	125	People GTi	2010	2015	193			355	
	125	People One	2016	2019	299				

Type	ccm		from	to	FL	FR	RL	RR	P
	125	People S	2005	2006	183				
	125	People S DD	2007	2011	183			286	
	125	People S DD (Rear Disc Model) (5 Bolt Fixing)	2007	2020	183			355	
	125	Sector	1998	2001	332				
	125	Spacer	1997	1997	332			332	
	125	Spike	2000	2006	011				
	125	Spike R	2004	2006	332			332	
	125	Straight	2005	2006	332				
	125	Stryker	2001	2006	334				
	125	Super 8 (4T)	2008	2015	183				
	125	Super-9	2000	2000	003			183	
	125	Techno GT	2006	2010	088				
	125	Visa R	2011	2015	005				
	125	Vivio	2000	2003	334				
	125	Yager	2000	2000	332			332	
	125	Yager GT	2007	2013	332			332	
	125	Zing	1997	2013	332				
DX	150	Custom	1993	1993	011				
MXER	150		2003	2003				183	
MXER	150	Quad	2002	2007				183	
MXU	150	(4T)	2005	2020				183	
NSR	150		1993	1993	011				
	150	Agility R16 (C30000) (16"wheels)	2008	2012	183			332	
	150	Bet & Win	2000	2006	332			332	
	150	Custom	1997	1997	332				
	150	Dink	1997	2004	088			088	
	150	Dink Classic	2002	2002	332			332	
	150	Freeway	1995	1995	071				
	150	Grand Dink	2001	2007	332			332	
	150	Heroism (SE30AD)	1995	1997	136			131	
	150	Hipster	1999	2006	332				
	150	Jetix	2010	2010	011			332	
	150	Joyride	2001	2001				088	
	150	Like (2T)	2009	2009	183				
	150	Miler	2001	2007	332			332	
	150	Movie XL	2001	2009	332				
	150	People	1999	2004	183				
	150	Spacer	1997	1997	088			088	
	150	Stryker (Off road)	2000	2006	334				
	150	Vivio	2000	2003	334				
	150	Yager	2001	2001	088			088	
	150	Zing	1999	1999	088				
	200	People GTi	2010	2015	193			355	
	200	Agility i R16	2010	2015	183				
	200	Dink i	2006	2015	332			332	
	200	i Downtown	2010	2015	022			302	
	200	i New Dink	2008	2008	088			088	
	200	Like i	2009	2009	183				
	200	Like i LX	2009	2015	334			332	
	200	People i S DD	2007	2011	183			286	
	200	People S (D11000)	2005	2006	183				
	200	People S i DD (D12000) (5 bolt ixing disc)	2007	2015	183			355	
	200	Yager i	2007	2013	332			332	
KXR	250	Mongoose Quad	2004	2007	230	230		140	
MXU	250		2004	2013	230	230		140	
MXU	250	R	2012	2013	230	230		230	
	250	Bet & Win	2000	2006	332			332	
	250	Grand Dink	2001	2006	140			192	
	250	i X-Citing (T71000)	2006	2008	022			355	
	250	Maxxer	2012	2013	230	230		140	
	250	People	2003	2006	332			022	
	250	People Si DD	2006	2008	334	332		355	
	250	Super-9	2000	2000	071			183	
	250	Urban Quad	2006	2006	230	230		140	
	250	Venox (R20010/RA50AA/Carb Model)	2000	2003	014				
	250	Venox (R20012/EFi Model)	2007	2014	014				
	250	Venox (RFBR20011/RA50AD/Carb Model)	2004	2006	014				
	250	X-Citing (T71000)	2005	2005	022			355	
	250	Yup	2003	2006	332			332	
	300	Agility Max i(ABS)	2015	2015	193			355	
GTS	300		2008	2008				186	
K-XCT	300	i	2012	2015	193				
K-XCT	300	i (ABS)	2012	2015	193			355	
MXU	300		2006	2011	230	230		230	
MXU	300	R	2010	2014	230	230		230	
S	300	i People	2008	2010	334	332		355	
	300	Grand Dink i	2012	2020	022			355	
	300	i Downtown (V20000)	2009	2012	022			302	
	300	i Downtown (ABS/C20010)	2010	2015	022			302	
	300	Maxxer	2006	2013	230	230		140	
	300	People GTi	2010	2015	193			355	
	300	Super Dink i (V20000)	2009	2012	022			302	
	300	X Town i	2017	2020	193			355	
	300	X-Citing i (T72000 - EFi Model)	2008	2008	022			355	

Type	ccm		from	to	FL	FR	RL	RR	P
	300	X-Citing i R (T720001/T72011)	2009	2014	022			355	
	350	New Downtown i	2015	2020	193			355	
MXU	400	(A40000)	2008	2011	254	254		254	303
	400	i X-Citing	2012	2020	251	251		333	
	400	i X-Citing S	2017	2020	251	251		333	
	400	Maxxer	2009	2010	254	254		254	303
MXU	450	i IRS	2011	2012	254	254		254	
MXU	450	i IRS	2012	2018	254	254		254	
UXV	450	i (Side X Side)	2015	2015	230	230	230	230	
	450	Maxxer i (4T)	2010	2015	254	254		254	303
MXU	500	4x4/Carb Model	2005	2009	230	230		230	
MXU	500	i (4x4 IRS) (LAAOCD/CM)	2009	2014	316	316		314	230
MXU	500	i DX	2011	2013	316	316		314	
UXV	500	4x4 (Side x Side) U10000	2008	2009	230	230		230	
UXV	500	i (Side x Side/4x4) U10100	2010	2015	230	230		230	
	500	i X-Citing Evo (ABS)	2013	2013	022			333	
	500	X-Citing (T70000) (Carb Model)	2005	2005	022	022		333	
	500	X-Citing i (T70020) (EFi Model)	2006	2008	022	022		333	
	500	X-Citing Ri (T70021)(EFi Model)	2009	2015	022	022		333	
AK	550		2017	2019	328	328		048	
MXU	550	i	2012	2015	316	316		314	
MXU	550	i (4x4 LOF)	2013	2020	316	316		314	230
MX	700	My Road i	2012	2015	022	022		333	
MXU	700	i (4x4 LOF)	2013	2018	316	316		314	230
UXV	700	i Turf	2014	2015	316	316		314	230
	700	i Myroad	2008	2008	022	022		022	
	700	i Myroad	2009	2011	022	022		014	
		LAMBRETTA							
LJ	50		2012	2013	174				
LT	50		2012	2013	174				
	50	N Pato	2008	2010	011			011	
LN	125	(4T)	2010	2013	174				
	125	N Pato	2008	2010	011			011	
ANA	151		2008	2008	011				
LN	151	(4T)	2010	2013	174				
	151	N Pato	2008	2010	011			011	
		LAVERDA							
		Montjuic	1976	1976	038			038	
OR	50	Atlas	1987	1987	038			038	
	50	Gaucho	1992	1992	038			038	
CU	125	Ride	1986	1986	038				
GS	125	Lesmo	1986	1989	038			038	
GS	125	Lesmo	1990	1990	096			096	
HP	125	Quasar	2004	2004				232	
LB	125	Custom/Sarbia/strada Sport	1985	1987	096				
LZ	125	Sport (Brembo Caliper)	1980	1982	038				
LZ	125	Sport (Grimeca Caliper)	1980	1982	184				
	125	Formula	1986	1986	096				
	125	Phoenix	2001	2004	234			183	
	150	Phoenix	2001	2004	234			183	
HP	180	Quasar	2004	2004				232	
	200	Phoenix	2001	2004	234			183	
GS	350	Lesmo	1986	1986	038	038		038	
PF	350	Alpino			038	038		038	
RS	350	Alpino			038	038		038	
	400	Quasar 4x4	2004	2004	232	232		232	
SFC	500				081	081		081	
	500	Alpino	1976	1976	038			038	
	500	Quasar 4x4	2004	2004	232	232		232	
	500	Quasar 4x4 C	2004	2004	232	232		232	
OR	600	Atlas	1986	1986	101			038	
SFC	600		1986	1986	081	081		081	
	650	All Models	1994	1995	064			038	
	650	Ghost	1992	1992	064	064		038	
	650	V-Six	1993	1993	081	081		081	
	668	All models	1996	1998	064			038	
	700	El Cid	1990	1990	005			084	
SF2	750		1974	1974	081	081			
SF3	750		1976	1977	081	081		081	
SFC	750		1974	1974	081	081		081	
	750	All Models	1998	2001	064	064		038	
TTS	800		1999	1999	064	064		152	
SFC	1000		2003	2004	177	177		152	
SFC	1000	(Rad.cal.)	2004	2004	177	177			
TGA	1000	Executive	1984	1984	081	081		081	
	1000	3C	1974	1975	081	081		081	
	1000	3CL	1976	1978	081	081		081	
	1000	3CL Jarama/Jota	1979	1981	081	081		081	
	1000	Jota	1976	1983	081	081		081	
	1000	Jota	1995	1995	064	064		038	
	1000	RGA/RGS Exec	1983	1983	081	081		081	
	1000	RGS	1982	1982	081	081		081	
	1000	RGS Corsa	1984	1984	197	197		081	
	1000	SFC	1985	1996	081	081		081	
	1200		1978	1979	081	081		081	
	1200	TS/Mirage	1981	1981	081	081		081	

Type	ccm		from	to	FL	FR	RL	RR	P
		LEM							
CX2/ CX3	50				190			190	
R2/R3	50	(Hydraulic System)	2003	2005	190			190	
	50	Flash	1994	1994	114				
RX	65				190			190	
RX	150		2011	2011				190	
R3		XC	2003	2003	190			190	
RX		2/3			190			190	
		Four X Pro			114			121	
		LEONART							
	125	Bobber	2013	2014	011			332	
	125	Daytona	2013	2014	011			332	
	125	Raptor	2013	2014	011			332	
	125	Spyder	2013	2014	011			332	
	250	Raptor	2013	2014	011			332	
	350	Bobber	2013	2014	011			332	
	350	Daytona	2013	2014	011			332	
	350	Spyder	2013	2014	011			332	
		LEXMOTO							
FMR	50	(WY50QT-58R)	2015	2018	011				
LSM	50	(STR50)	2012	2016	011			144	
	50	Milano (FT50QT-27)	2016	2018	011				
	50	Molly (DFE50QT-3)	2015	2018	114				
FMR	125	(WY125-74R)	2014	2018	011				
FMR	125	EFi (WY125T-74R-E4)	2014	2018	011				
FMS	125	(ZN125T-7H)	2015	2018	011			332	
LSM	125	(STR125YB)	2012	2018	011			144	
MX	125	WY125T-108	2015	2018	332			144	
XTR-S	125		2013	2018	332				
	125	Adrenaline (XFLM125GY-2B)	2013	2018	002			144	
	125	Adrenaline EFi (XFLM125GY-2B-E4)	2015	2018	299			144	
	125	Aspire (TD125-43)	2012	2016	011			264	
	125	Gladiator (SB125T-23B)	2014	2018	144				
	125	Matador (ZS125T-40)	2013	2018	011				
	125	Matador EFi (ZS125T-40-E4)	2013	2017	299			332	
	125	Michigan (ZS125-79)	2013	2018	002				
	125	Michigan (ZS125-79-E4)	2013	2020	299			332	
	125	Milano EFi (FDT125T-27)	2012	2018	011				
	125	Milano EFi (FT125T-27-E4)	2016	2020	011			002	
	125	Tommy (ZN125T-E)	2011	2017	011				
		LIFAN							
LF	50	OGY			114				
	50	Smart			210				
LF	100	A			011				
LF	125	Off Road	2007	2007	250				
	125	Smart			210				
		Lifan Electric LF 1200 DT E3	2017	2020	387				
		Lifan Electric LF 1200 DT E3 Deluxe	2017	2020	387				
		LINHAI							
LH	50	Police (Scooter)	2007	2009	018				
ATV	80		2013	2013				005	
	125	/150 Monarch T	2006	2007	099			146	
	125	Eggy (Scooter)	2007	2009	018				
ATV	150		2013	2013				005	
	260	Goon (2x4/4x4)	2007	2009	284	284		284	
CUV	300	Carry	2007	2009	284	284		284	
	300	Main Street (Scooter)	2007	2008	099			146	
	300	Muddy (4x4)	2007	2009	284	284		284	179
ATV	310	(4x2)	2013	2013	284	284		284	
ATV	320	(4x4) Carrier	2013	2013	284	284		284	
ATV	420	(4x2) LOF	2013	2013	284	284		284	
ATV	420	(4x4) Carrier/LOF	2013	2013	284	284		284	
ATV	420	(4x4) LOF	2013	2013	284	284		284	
ATV	600	EFI (4x4) LOF	2013	2013				284	
CUV		Jobber (4x4)	2013	2013	294	294		284	
		LML							
	125	i Star (4T)	2010	2015	118				
	125	Star (2T)	2010	2014	118				
	125	Star Deluxe (2T) (Front disc)	2001	2003	118				
	150	Star (2T)	2010	2014	118				
	150	Star Deluxe (2T) (Front disc)	2001	2003	118				
	151	i Star (4T)	2010	2015	118				
	200	i Star (4T)	2010	2015	118				
		LONCIN							
LX	110	4	2002	2002	088				
LX	125		2002	2002	088				
LX	150	6	2002	2002	099				
		MACAL							
AM5/6	50	Trophy	1999	1999	121				
AM5/6	50	Trophy H2O	1999	1999	121				
	50	Flash	1999	1999	098				
		MACBOR							
XC	50	510 Racing	2004	2004	173			121	
XC	50	512 Pro	2004	2004	173				
XC	50	512 Racing	2004	2004	173			121	

Type	ccm		from	to	FL	FR	RL	RR	P
XC	50	512 T	2004	2004	173				
XC	50	515 R 6V	2004	2004	173			121	
		MAGNI							
	1200	Sport S	2001	2001	141			016	
		MAGURA							
	770	Radial Bremssystem			321				
		MAICO							
		All Models	1985	1985	038				
		All Models	1989	1990	026			026	
C-1	50	Hard Enduro	1999	1999	047				
R-1	50	Superbike	1999	1999	047				
X-1	50	SuperCross	1999	1999	047				
	50	Booster Track	1997	1997	047				
	50	Cruiser	1999	1999	047				
	50	Thunderbike II	1999	1999	047				
GM	250	LC	1985	1986	038				
GM	250	Star	1986	1986	030			030	
GP	250	all models	1989	1989	026			026	
GP	250	E	1987	1987	030			030	
GP	250	Motocross	1987	1987	030			030	
MD	250		1983	1983	038			038	
	250	Motocross/Enduro	1999	1999	031			023	
	250	MX	1994	1998	026			026	
	350		1993	1993	026			026	
GP	400	all models	1989	1989	026			026	
GP	400	E	1987	1987	030			030	
GP	400	Motocross	1987	1987	030			030	
GM	500	LC	1985	1986	038				
GM	500	Star	1986	1986	030			030	
GP	500	all models	1989	1989	026			026	
GP	500	E	1987	1987	030			030	
GP	500	Motocross	1987	1987	030			030	
MX	500		1994	1998				005	
	500		1993	1993	026			026	
	500	Motocross/Enduro	1999	1999	031			023	
	500	MX	1994	1998	026				
	500	Supermotard	1999	1999	031			023	
GP	550		1987	1987	030			030	
		MALAGUTI							
CR-1	50	Crosser	1995	1998	115				
DVD	50	Malbo Line (2T)	2010	2011	114				
ES	50	Dune	1989	1989	096			096	
F10	50	Jetline	1991	1993	094				
F10	50	Jetline	1994	1997	098, 107				
F10	50	Timermachine	2003	2007	098				
F10	50	WAP	2010	2011	047				
F12	50	Phantom	1994	1998	120				
F12	50	Phantom	1998	2002	115			098, 107	
F12	50	Racing Life	2003	2007	107			107	
F12	50	Tyre Track	2003	2007	107			107	
F12R	50	Phantom A/C	2007	2011	098, 107				
F12R	50	Phantom L/C	2007	2011	098, 107			098, 107	
F15	50	Firefox	1996	2000	115				
F15	50	Firefox (Air Cooled Models)	1999	2008	098, 107			098, 107	
F15	50	Firefox (Liquid Cooled Models)	2001	2008	098, 107			098, 107	
F15	50	RR	1999	2001				098, 107	
MLX	50	Enduro	1987	1987	115				
MXR	50		1989	1989	096				
NKD	50	Drakon	2005	2009	152			121	
RST	50	Sport	1987	1987	120			120	
XL	50	Sport	1982	1982	159				
XSM	50	Supermotard	2003	2011	122			121	
XTM	50		2003	2011	121			121	
	50	Centro (4T)/SL	2008	2011	047				
	50	Centro Base			115				
	50	Centro SL/SL Cat	1994	2000	115				
	50	Ciak	2000	2003	098, 107			098	
	50	Ciak	2004	2004	098, 107				
	50	Ciak (4T) Master	2004	2008	098, 107				
	50	Drakon S	2006	2006	152			121	
	50	Enduro Dune	1987	1988	120			120	
	50	Enduro MEX	1985	1986	038				
	50	Enduro MEX	1987	1987	086				
	50	Enduro MSX	1985	1985	086				
	50	Enduro RCX-W/Sahib	1983	1983	120				
	50	Evolution	1991	1991	120				
	50	Fifty	2004	2004				121	
	50	Fifty Full/CX	1983	1983	120				
	50	Fifty HF	1982	1982	159				
	50	Fifty Top	1985	1985	120				

Type	ccm		from	to	FL	FR	RL	RR	P
	50	MDX Gold Enduro	1987	1987	086				
	50	Raid	1991	1991	120				
	50	RGT Sport	1985	1985	120				
	50	RGT Strada	1983	1983	120				
	50	Watercooled	1982	1982	159				
	50	Yesterday	1998	2003	115				
F69	70	Phantom	1998	1998	098, 107				
	80	Enduro MDX	1984	1984	038				
	80	Chopper	1982	1982	159				
F12	100	Phantom (All liquid cooled models)	1999	2007	098, 107			098, 107	
	100	Ciak	2000	2004	098, 107			098, 107	
F18	125	Warrior	2000	2003	038			150	
	125	/150/200 Ciak	2001	2008	038				
	125	/200 Phantom MAX	2004	2008	122			150	
	125	-3 Madison	2006	2009	122			150	
	125	Blog ie	2009	2011	334			018	
	125	Centro ie/SL	2007	2011	334			018	
	125	Madison	1999	1999				019	
	125	Madison	1999	2002	122			150	
	125	Madison R	2003	2007	122			150	
F18	150	Warrior	2000	2003	098, 107			150	
	150	Madison	1999	2003	122			150	
	160	Blog ie	2009	2011	334			018	
	160	Centro ie/SL	2007	2011	334			018	
	180	Madison	2002	2003	122			150	
	200	Madison S	2004	2004	122			150	
	250	Madison	2004	2007	122			150	
	250	Madison ie3	2006	2010	122			150	
	250	Madison S	1999	2003	193		150	150	
	250	Password	2005	2011	122			150	
	250	Phantom Max	2004	2008	122			150	
	300	Scarabeo S	2009	2010				150	
	400	Madison K	2002	2006	193			150	
	500	Spidermax GT	2004	2010	010	010		150	
	500	Spidermax RS	2004	2011	010	010		150	
F10		Jetline WAP	2006	2010	098, 107				
F10		Tribal	2008	2010	098, 107				
F12		Phantom	1994	1998	120				
F12		Phantom (A/C)	2002	2008	098, 107				
V4		Olympique	1982	1982	159				
X3M		Enduro (Cast wheel)	2008	2010				121	
X3M		Enduro (Spoke wheel)	2008	2010	211				
X3M		Motard (Cast wheel)	2008	2010	122			121	
		25/40 Chopper	1982	1982	159				
		Ciak (Electrical power)	2000	2005	098, 107				
		Crosser CR1	1997	1997	120				
		Ronco RCW	1983	1983	159				
		MALANCA							
GTI	80				096	096		096	
	125	/ST 54/GT 5			159				
	125	GTI			038			038	
	125	Mark Enduro	1984	1984	038				
	125	Mark Enduro	1985	1985	096				
	200	Ciak	2006	2006	038				
E2		125			096	096		096	
E2		C80/CS			038			038	
		ob one M6	1985	1985	096	096		096	
		ob one M6 Racing	1985	1985	096	096		096	
		MASAI							
L	150		2005	2007				047	
A	300	Quad	2005	2007	047	047		140	
A	450	Quad	2005	2007	047	047		140	
	50	Bibop	2014	2016	136				
	50	Bibop Racing	2014	2016	136				
	50	City	2018	2018	011			011	
	50	Dirt Track	2018	2020	289				
	50	Fifty (Roadster 50)	2018	2020	289				
	125	Black Seven	2017	2020	011			144	
	125	Brown Edition	2018	2020				144	
	125	Café Racer	2014	2016	334			144	
	125	Café Racer	2017	2020				144	
	125	City	2018	2020	011			011	
	125	Dirt Track	2018	2020				144	
	125	Scrambler	2014	2016	289				
	125	Seventy	2014	2020	289				
	125	Seventy Five	2014	2016	334			144	
	125	Seventy Five (Classic)	2017	2020				144	
	125	Sixty Five	2013	2015	011				
	250	Black Seven	2017	2020	011			144	
	250	Café Racer	2017	2018	011			144	

Type	ccm		from	to	FL	FR	RL	RR	P
	250	Two Fifty	2014	2016	011			211	
	250	Two Fifty	2017	2020	011			144	
TT40	400	cc (Trackstar)	2017	2020	064				
	400	Family Side x Side Car Outfit	2018	2020	022			011	
	400	Roadstar (Five Hundred)	2014	2020	022				
	400	Scrambler (Dirtstar 400)	2017	2020	022				
		MASSEY FERGUSON							
MF	250	(2WD/4WD)	2004	2004	232	232		232	
MF	300	(2WD/4WD)	2004	2004	232	232		232	
MF	400	4WD	2004	2004	232	232		232	
MF	400	4WD Auto (386cc)	2005	2009	254	254		254	
MF	400	Auto 4WD	2004	2004	232	232		232	
MF	500	(Auto 4WD) TBX Auto	2004	2004	232	232		232	
MF	500	4WD Auto (493cc)	2005	2009	254	254		254	
MF	650	/4WD Auto (641cc)	2005	2009	254	254		254	
MF	650	2 cyl./4WD Auto (633cc)	2005	2009	254	254		254	
MF	700	D/4WD Auto (686cc Diesel)	2005	2008	254	254		254	
		MBK							
CR	50	Z Target	1991	1995	114				
CS	50	Mach G AC (Air Cooled)	2002	2010	098, 107				
CS	50	Mach G LC (Liquid Cooled)	2003	2010	098, 107				
CW	50	Booster (10"wheels)	2009	2010	098, 107				
CW	50	Booster (12"wheels)	2006	2010	098, 107				
CW	50	Booster Naked (10" wheels)	2006	2010	098, 107				
CW	50	Booster R Road	1994	1995	098, 107				
CW	50	Booster Spirit	1996	1998	098, 107				
CW	50	Booster Spirit	1999	2006	098, 107				
CW	50	Evolis	1997	1997	098, 107				
CW	50	Fizz	1993	1997	098, 107				
CW	50	Naked Booster (12"wheels)	2009	2010	098, 107				
CW	50	Power Rocket	2006	2006	098, 107				
CW	50	RS Booster Naked	2004	2008	098, 107				
CW	50	RS Booster NG	1995	1998	098, 107				
CW	50	RS Booster NG	2001	2006	098, 107				
CW	50	RS Booster Spirit	1999	2006	098, 107				
CW	50	RSP Rocket	1997	2000	098, 107				
CW	50	RSX Booster Track	1996	1998	098, 107				
CY	50	Forte/Forte Mufa	1996	1997	114				
DT	50	Enduro	2003	2003	121			121	
DT	50	Supermotard	2003	2006	122			121	
EW	50	Stunt	2000	2006	128				
EW	50	Stunt Naked	2005	2010	128				
TZR	50	X-Power	2000	2000				018	
TZR	50	X-Power	2003	2009	122			121	
TZR	50	X-Blazer	2000	2000	009				
YA	50	R Forte	1994	1995	098, 107				
YE	50	Evolis	1992	1995	098, 107				
YH	50	Flipper	1998	2010	098, 107				
YM	50	Fizz	1994	1995	098, 107				
YN	50	Ovetto (4T)	2009	2010	098, 107				
YN	50	R Ovetto (2T)	1998	2010	098, 107				
YQ	50	Nitro	1997	2010	098, 107			128	
YQ	50	Nitro Naked	2006	2010	098, 107			128	
	50	Equalis	1996	1996	107				
	50	X-Limit	2002	2003				094	
	50	X-Limit	2004	2004	121			121	
CV	80	Evolis	1997	1997	098, 107				
YN	100	Ovetto	1999	2003	098, 107				
YQ	100	Nitro	2001	2002	098, 107				
VP	125	Cityliner	2008	2010	014			152	
XC	125	Flame 125	1996	2003	018				
XC	125	WAAP	2008	2010	264				
XN	125	/150 Doo Do	2000	2005	098, 107				
XP	125	Skycruiser	2006	2006	031			152	
XQ	125	Thunder	2001	2003	031			152	
YP	125	D Skyliner	1998	2010	031			152	
YP	125	Skycruiser	2006	2010	262			152	
YW	125	Z X-Over	2010	2010	330				
XC	150	Vertex	1997	1997	018				
XQ	150	Thunder	2001	2003	031			152	
	150	Skyliner	2001	2001	031				

Type	ccm		from	to	FL	FR	RL	RR	P
	180	Skyliner	2004	2004	031			152	
YP	250	Skyliner	1996	1999	099			146	
YP	250	Skyliner (+ABS)	2000	2002	099			146	
YP	300	R Kilibre	2003	2004	031			031	
YP	400	Skyliner	2004	2004	099			268	
		X-Limit Enduro	2003	2009	211			211	
		X-Limit Supermoto	2003	2009	122			211	
		MEGELLI							
	125	M	2008	2010	011			176	
	125	R (Sportbike)	2008	2010	011			176	
	125	S (Naked Sport Bike)	2008	2010	011			176	
		METRAKIT							
XL	80	Mini GP	2009	2009				173	
	125	Pre GP	2009	2009	233			173	
		MINARELLI							
MR	80				008				
		MINIMOTO							
		New			202				
		Pasini/GRC Calipers (Square 2 pin type)			201			201	
		MODENAS							
	115	Kriss			332				
	125	Dynamic	2008	2009	332			332	
	125	Kristar	2008	2011	332			332	
	135	X-Cite	2009	2010	332			332	
		MONDIAL							
	1000	Evo (Rad.cal)	2004	2004	177	177		152	
	1000	Piega	2002	2002	064				
	1000	Piega	2003	2004	177	177		152	
	1000	RZ Nuda	2004	2004	177	177			
	1000	Starfighter (Rad.cal)	2004	2004	177	177			
		MONTESA							
	125	Cota	1988	1988	121			121	
4RT	250	Cota	2005	2010	168, 198			173	
4RT	260	Cota (Repsol Edition 2E/4E)	2014	2018	325			173	
4RT	260	Cota (STD Version ED/3E)	2014	2018	168, 198			173	
4RT	260	Repsol	2018	2018	388				
4RT	260	Standart	2018	2018	388				
	260	4 Ride Enduro (260cc/4T)	2016	2018	325			173	
RR	300	Cota	2018	2018	388				
RR	300	Cota (4T)	2016	2016	325			173	
	304	Cota	1988	1988	121			121	
	307	/335 Cota	1988	1988	121			121	
	307	Cota	1989	1989	121			121	
	307	Cota Trial	1988	1988	121			121	
	309	Cota	1989	1989	121			038	
	310	Cota	1989	1989	121			038	
	311	(Honda) 260cc	1992	1993	121			038	
	314	R (Honda)	1994	1996	121			038	
	315	R (Honda)	1997	2000	121			038	
	315	R (Honda)	2001	2004	168, 198			173	
NTX	350		1987	1990	038			038	
V35	350	(12 spoke cast wheels/electronic ignition)	1977	1979	038			038	
V35	350	Florida	1986	1990	038			038	
V35	350	III (10 spoke cast wheels)	1985	1987	038			038	
V35	350	II (12 Spoke Cast Wheels)	1980	1985	038			038	
V35C	350	Custom (10 spoke cast wheels/points ignition)	1982	1986	038			038	
	350	Nevada	1992	1997	038			038	
	350	Nevada Club	1998	1999	038			038	
	350	V43 II (12 Spoke cast wheels)	1980	1985	038			038	
H7	360	Enduro	1986	1986	120				
M7	360	Enduro	1985	1985	121				
	360	R (Honda)	2001	2004	168			173	
V50	500	(12 spoke cast wheels/electronic ignition)	1977	1979	038			038	
V50	500	III (12 spoke cast wheels)	1983	1986	038			038	
V50C	500	Custom (10 spoke cast wheels/points ignition)	1982	1986	038			038	
NTX	650		1987	1990	038			038	
V65	650	Florida (Spoke / Cast Wheel Models)	1985	1991	038			038	
V65C	650	Custom (10 spoke cast wheels)	1983	1986	038			038	
	650	65 GT	1988	1989	038			038	
SP	750	(10 Spoke Cast Wheels)	1990	1992	038			038	
V75	750	(10 spoke cast wheel/floating front discs)	1996	2001	038			038	
V75	750	(10 spoke cast wheel/solid front disc)	1992	1996	038			038	
	750	Nevada	1991	2001	038			038	
	750	Nevada Club (Up to LK112433)	1998	2000	038			038	
	750	Nevada Club (From to LK112433)	2000	2001	038				
	750	Strada/T Roadster	1993	1995	038			038	
	750	Targa	1990	1993	038			038	
	1000	Daytona	1992	1995				038	
	1000	Daytona RS	1997	1998				038	
	1000	V10 Centauro GT	1997	1999				038	
	1000	V10 Centauro Sport	1997	1999				038	

Type	ccm		from	to	FL	FR	RL	RR	P
	1100	Sport Carbs	1994	1996				038	
	1100	Sport Corsa	1998	1999				038	
	1100	Sport EFi	1996	1999				038	
	1100	V11 Ballabio	2003	2005	038				
	1100	V11 Le Mans	2001	2005				038	
	1100	V11 Naked	2002	2003				038	
	1100	V11 Scura	2001	2003				038	
	1100	V11 Sport	1999	2001				038	
		Cota 4 Ride	2018	2018	388				
		MORBIDELLI							
	125	cc			008	008		008	
		MORIWAKI							
MD	250	H/S	2008	2013	207			161	
		MOTO MASTER							
		4 Piston			032				
		MOTO-GUZZI							
	100	Quota D	1993	1995	019				
BX	125		1992	1992	038			038	
	125	Custom	1985	1985	038				
	125	Enduro TT	1985	1985	038				
	240	/4	1977	1977	038				
XE	250	Country	1988	1988	038				
	250	(All Models)	1975	1975	096				
NTX	350		1988	1988	038			038	
NTX	350		1990	1990	038			081	
V35	350	C			081	081		038	
V35	350	Florida			081	081		038	
V35	350	GT	1990	1990	081			038	
V35	350	GT			038				
V35	350	II, Imola, Imola II	1977	1977	038	038		038	
V35	350	III	1987	1987	081	081		081	
V35	350	TT	1986	1986	038	038		038	
	350	Falco	1988	1988	038			038	
	350	Imola	1978	1978	038	038		038	
	350	Nevada	1992	1992	038	038			
V50	500	1, 2, 3, Monza Chopper	1977	1978	038	038		038	
V65	650	Florida	1986	1986	081	081		081	
V65	650	GT	1990	1990	081			149	
V65	650	Lario	1986	1986	038	038		038	
V65	650	NTX	1987	1987	038			038	
V65	650	SP, Choper			038	038		038	
V65	650	TT	1986	1986	038	038		038	
NTX	750		1989	1989	038			038	
NTX	750		1990	1990	029			029	
S3	750		1975	1976	081	081			
SP	750		1991	1991	081	081			
V	750	ie Breva (3 spoke cast wheels)	2003	2007	141			152	
V7	750	Anniversario	2017	2017	141			010	
V7	750	Cafe Classic	2009	2012	141			152	
V7	750	Classic	2008	2012	141			152	
V7	750	Clubman Racer	2010	2011	141			152	
V7	750	Racer	2010	2017	141			010	
V7	750	Racer II (ABS/Spoke Wheel)	2015	2017	141			010	
V7	750	Special (Spoke wheel)	2012	2014	141			010	
V7	750	Special II (ABS/Cast Wheel)	2015	2017	141			010	
V7	750	Special III (ABS /Spoke Wheel)	2017	2020	141			010	
V7	750	Stone (Cast wheel)	2012	2014	141			010	
V7	750	Stone II (ABS/Spoke Wheel)	2015	2017	141			010	
V7	750	Stone III (ABS/ Cast Wheel)	2017	2020	141			010	
V7	750	Stornello II	2016	2017	141			010	
V75	750	TT Paris-Dakar	1986	1986	081	081			
	750	Nevada	1992	1992	038	038			
	750	Nevada	1997	1997	038	038		038	
	750	Nevada	2002	2011	141			152	
	750	Nevada (Club)	2003	2004	141				
	750	Nevada Classic ie (Spoke wheels)	2004	2015	141			152	
	750	Nevada Club (From LK112434-)	2000	2001				152	
	750	Nevada Touring	2007	2007	141				
V85	850	TT	2018	2020	141	141		010	
V9	850	Bobber	2016	2019	141	141		010	
V9	850	Roamer	2016	2020	141	141		010	
V9	850	X-Track	2017	2017	141	141		010	
	850	Breva ie (Non ABS models)	2006	2007	141	141		031	
	850	Griso	2006	2007	141	141		031	
	850	Le Mans I	1976	1977	081	081		081	
	850	Le Mans II	1978	1980	081	081		081	
	850	Le Mans III (12 Spoke Cast Wheel)	1981	1984	081	081		197	
	850	Norge	2007	2007	141	141			
	850	T	1974	1974	081				
	850	T3	1975	1979	081	081		081	
	850	T3 California (with screen/panniers)	1975	1979	081	081		081	
	850	T4	1980	1982	081	081		081	
	850	T5	1983	1985	081	081		081	
	850	T5 California (with screen/panniers)	1983	1985	081	081		081	
	940	Bellagio	2007	2013	106	106		031	

Type	ccm		from	to	FL	FR	RL	RR	P
1000	1000	S	1989	1994	081	081		081	
1000	1000	SP II (10 Spoke Cast Wheels/Solid Front Discs)	1984	1987	081	081		081	
1000	1000	SP III (No Spoke Cast Wheels/Flat Floating Front Discs)	1989	1994	081	081		081	
G5 V	1000		1978	1983	081	081		081	
MGS-01	1000	Corsa	2004	2007	177	177		152	
	1000	California II (Spoke Cast Wheels / Screen & Luggage)	1981	1987	081	081		081	
	1000	California III - EFi (VY Chassis Code / Full Fairing / Cast & Spoke Wheels)	1990	1993	081	081		081	
	1000	California III Carbs (VW Chassis Code / Screen Only)	1987	1993	081	081		081	
	1000	California III Carbs (VY Chassis Code / Full Fairing / Cast & Spoke Wheels)	1988	1990	081	081		081	
	1000	Daytona	1992	1995	064	064		038	
	1000	Daytona RS	1997	1998	064	064		038	
	1000	GT 1st Series Alloy Wheels & Cast	1987	1987	081	081		081	
	1000	GT 2nd Series Alloy Wheels & Cast	1987	1991	081	081		081	
	1000	Le Mans IV/V (10 Spoke Cast Wheel)	1984	1993	081	081		081	
	1000	Quota	1992	1997	019	019		089	
	1000	SP (12 Spoke Cast Wheels)	1979	1983	081	081		197	
	1000	Strada	1993	1994	081	081		081	
	1000	V10 Centauro GT	1997	1999	064	064			
	1000	V10 Centauro Sport	1997	1999	064	064			
V11	1100	Ballabio	2003	2005	141	141		038	
V11	1100	Le Mans	2001	2005	141	141		038	
V11	1100	Naked	2002	2003	141	141		038	
V11	1100	Scura	2001	2003	141	141		038	
V11	1100	Sport	1999	2001	141	141		038	
V11	1100	Sport	1998	1999	064	064			
	1100	Breva (ABS)	2005	2007	141	141		031	
	1100	Breva (Non ABS models)	2005	2007	141	141		031	
	1100	California - Carbs (KC/KD Chassis codes)	1994	1997	081	081		081	
	1100	California 90	2012	2012	141	141		106	
	1100	California Aluminium	2002	2005	141	141		106	
	1100	California Aquila Nera	2009	2011	141	141		106	
	1100	California Classic Touring	2006	2008	141	141		106	
	1100	California EV (From KD115427 / 2 pin pad fixing)	1997	2002	141	141		106	
	1100	California EV (Up to KD115426/Single pad pin fixing)	1997	2000	064	064		106	
	1100	California EV Touring	2003	2005	141	141		106	
	1100	California Jackal (2pad pin Fixing/From KD152329)	1994	2001	141	141		106	
	1100	California Jackal (Up to KD152328 / Single pin pad fixing)	1994	2001	064	064		106	
	1100	California Special (From KD131645/2 pin pad fixing)	1999	2000	141	141		106	
	1100	California Special (Up to KD131644 / Single pin pad fixing)	1999	2000	064	064		106	
	1100	California Sport	2001	2002	141	141		106	
	1100	California Stone	2001	2005	141			106	
	1100	California Stone Metal	2002	2003	141			106	
	1100	California Titanium (With Top Fairing)	2004	2005	141	141		106	
	1100	California Touring	2006	2007	141	141			
	1100	California Vintage	2006	2012	141	141		106	
	1100	Fionda	2005	2005	177	177		152	
	1100	Griso	2005	2008	141	141		106	
	1100	Griso 8V (Standart/Cast Wheel/Radial Caliper)	2007	2012	141	141		106	
	1100	Quota ES	1999	2001	106	106		031	
	1100	Sport Carbs	1994	1996	064	064			
	1100	Sport Corsa	1998	1999	064	064			
	1100	Sport EFi	1996	1999	064	064			
GT	1200	Norge 8V (ABS)	2008	2015	141	141		031	
	1200	Breva	2008	2009	141	141		031	
	1200	Griso 8v (1151cc/Cast Wheel/Rad.cal.)	2009	2011	141	141		031	
	1200	Griso 8V (Special Edition/Spoke Wheel/ Radial Caliper)	2007	2015	141	141		106	
	1200	Griso 8v (Std - Cast Wheel/Radial Caliper)	2007	2012	141	141		031	
	1200	Norge	2006	2007	141	141		031	
	1200	Sport (2V)	2007	2009	141	141		031	
	1200	Sport (4V)	2006	2007	141	141		031	
	1200	Sport (8V)	2008	2013	141	141		031	
	1200	Sport 8V SE	2012	2012	141	141			
	1200	Stelvio	2008	2011	141	141		031	
	1200	Stelvio 8V (ABS)	2011	2015	141	141		031	
	1200	Stelvio 8v NTX (ABS)	2011	2015	141	141		031	
	1200	Stelvio NTX ABS	2009	2010	141	141		031	
MGX	1400	21	2016	2020	141	141		106	
	1400	Audace	2015	2016	141	141		106	
	1400	Audace Carbon	2016	2017	141	141		106	
	1400	California Custom	2013	2015	141	141		106	
	1400	California Touring	2013	2020	141	141		106	
	1400	California Touring SE	2015	2017	141	141		106	
	1400	Eldorado	2015	2017	141	141		106	
		MOTOM							
ANA	50		2008	2009	011			332	
	50	Gypsy	2008	2009	136				
	50	Spasso	2008	2009	250				
	125	Dolcevita	2008	2009	136			011	
	125	Transcity	2008	2009	048			011	

Type	ccm		from	to	FL	FR	RL	RR	P
ANA	151		2008	2009	011			332	
	151	Dolcevita	2008	2009	136			011	
	250	Transcity	2008	2009	048			011	
		MOTO-MORINI							
	125	Monocilindro	1979	1979	184				
	125	Strada			184				
XE	250	Country	1988	1988	038				
	250	All Models	1971	1971	184				
	250	Strada			184				
	350	Coguaro			006			038	
	350	Coguaro, New York	1990	1990	006			038	
	350	Dart	1987	1987	006			038	
	350	Excalibur	1986	1986	101			101	
	350	Excalibur	1987	1987	010				
	350	Excalibur RLX	1993	1993	006			038	
	350	Indiana	1988	1988	101			038	
	350	K2	1984	1984	184				
	350	Kanguro	1987	1987	010			038	
	350	Sport	1979	1979	184			184	
	350	Sport	1980	1981	184				
	350	Strada			184				
	400	Dart	1989	1989	006			038	
	400	S			038	038		038	
	500	Sei V Classic	1989	1989	038	038			
	500	Strada			184				
	501	Camel	1988	1988	010			038	
	501	Coguaro	1989	1989	006			038	
	501	Excalibur	1986	1986	101			101	
	501	Excalibur	1987	1987	010				
	501	Excalibur	1989	1989	101			038	
	501	Excalibur RLX	1993	1993	006			038	
	501	New York	1989	1989	101			038	
	650	Indiana	1988	1988	101			038	
	750	Indiana	1988	1988	101			038	
MM3	1187		2007	2007	141	141		152	
9 1/2	1200		2006	2010	141	141		152	
	1200	Corsaro	2005	2010	141	141		152	
	1200	Corsaro Avio	2008	2009	141			152	
	1200	Corsaro Veloce	2007	2008	141	141		152	
	1200	Granferro	2010	2013	177	177		031	
	1200	Granpasso	2008	2013	106	106		031	
	1200	Rebello Giubileo	2012	2013	177	177		152	
	1200	Scrambler	2008	2009	141	141		152	
	1200	Scrambler	2010	2013	106	106		031	
	1200	Sport	2008	2010	141	141		152	
		MOTOR FACTORY							
		4 piston caliper front/rear			132				
		MOTOR UNION							
JC	125	2B Deer	1998	1998	071				
HK	250	Haoke	1997	1997	009				
		MOTORHISPANIA							
KN2	50		2012	2013	233			288	
MH	50	Furia 6v	1999	2004	121			121	
MH10	50	Eco Urban	2014	2014	288			047	
MH10	50	Enduro	2013	2014	288			047	
MH10	50	Pro Enduro	2013	2014	288			047	
MH10	50	Pro SM	2013	2013	288			047	
MH10	50	Pro Urban	2014	2014	288			047	
MH10	50	SM	2013	2013	288			047	
RX	50	R	2008	2014	233			289	
RX	50	Super Racing	2006	2007	095			121	
RYZ	50		2003	2003	095			121	
RYZ	50	Enduro	2006	2010	121			121	
RYZ	50	Enduro	2013	2014	288			047	
RYZ	50	Pro Racing Enduro	2006	2010	095			121	
RYZ	50	Pro Racing Enduro	2013	2014	122			121	
RYZ	50	Pro Racing Supermotard	2006	2010	122			121	
RYZ	50	Pro Racing Urban Bike	2006	2010	122			121	
RYZ	50	Pro SM	2013	2013	288			047	
RYZ	50	SM	2013	2013	288			047	
RYZ	50	SN	2004	2004	095				
RYZ	50	Supermotard	2006	2010	122			121	
RYZ	50	Urban Bike	2006	2010	095			121	
XPS-6	50	Supermotard	2004	2004	095				
	50	Furia Max Enduro	2006	2010	121			121	
	50	Furia Max Supermoto	2007	2010	121			121	
KN1	125	AC/LC	2009	2014	233			289	
KN2	125	(125/4T)	2012	2014	233			288	
LC	125	Hard Road SM	2012	2012	233			288	
MH10	125	Enduro	2013	2014	288			047	
MH10	125	SM	2013	2013	288			047	
MH7	125	Naked (Air cooled/Liquid cooled)	2008	2014	233			289	
RX	125	R	2008	2014	233			289	
RYZ	125	Arena Enduro	2005	2005	121			121	
RYZ	125	Arena Pro Racing Supermotard	2006	2006	095			121	
	125	Arena Pro Racing Urban bike	2006	2006	095			121	

Type	ccm		from	to	FL	FR	RL	RR	P
	125	Custom	2012	2012	289				
	125	Duna	2013	2014	288			047	
	125	Duna Dual Plus Trail	2008	2010	122			121	
	125	Duna Hard Road Enduro	2008	2012	289			121	
	125	Duna Plus	2014	2014	122			121	
	125	Duna Pro	2013	2014	288			047	
	125	Duna Sport City Supermotard	2008	2010	122			289	
	125	Duna Supermotard	2014	2014	278			289	
	125	Ranger Enduro	2013	2014	278				
	49	Go-Go	2003	2003	011				
	50	/100 Grand Prix	1999	2003	047				
	50	Bee	2004	2005	114				
	50	G10 (50cc/2T)	2011	2012	136				
	50	Go-Go	1997	2005	114				
	50	Grand Prix	1999	1999	047				
	50	Road Runner	2001	2002	114				
	50	Scrambler	2001	2001	114				
	50	Stinger	2001	2005	114				
	100	Road Runner	2001	2002	114				
	110	Go-Go	2001	2002	114				
SK	125	(Cast Wheel)	2010	2012	289				
SMX	125		2004	2006	095			121	
	125	Grand Prix	2001	2001	114				
	125	Grand Prix	2002	2002	047			047	
	125	Lambros /4T	2011	2012	136				
	125	Lazer Buggie	2003	2007				047	
	125	Road Runner	2004	2005	002				
	125	Virage	2001	2001	289				
	300	Geko Quad	2004	2006	047	047		009	
		MOTRON							
GL4	50	ID Flash	1992	1992	159				
GTD	50	Italian Max, 2	1992	1992	159				
	50	Spike	1997	1997	098				
	50	Sting	1998	1998	098, 107				
	50	Syncro	1998	1998	098, 107				
	50	Thunder	1998	1998	098, 107				
RZ1		Compact	1992	1992	159				
		MOTUS							
MST			2014	2018	141	141		152	
MST-01			2012	2013	177	177		152	
MSTR			2014	2018	258	258		152	
MTSR-01			2012	2013	177	177		152	
		MV AGUSTA							
F3	675		2012	2020	141	141		152	
F3	675	RC	2015	2018	258	258		152	
F3	675	Serie Oro	2012	2013	258	258		152	
	675	Brutale	2012	2017	141	141		152	
F4	750	SPR	2001	2004	126	126		235	
F4	750	SPR Senna	2001	2003	126	126		235	
F4S	750	(Mono Posto)	1999	2004	126	126		235	
F4S	750	1+1 (Bi-Posto)	2001	2004	126	126		235	
	750	Brutale Oro F4	2003	2005	126	126		235	
	750	Brutale S F4	2003	2005	126	126		235	
F3	800		2014	2018	258	258		152	
F3	800	Ago	2014	2015	258	258		152	
F3	800	RC	2015	2020	258	258		152	
	800	Brutale	2012	2018	141	141		152	
	800	Brutale Dragster	2014	2015	141	141		152	
	800	Brutale Rosso	2019	2020	141	141		152	
	800	Brutale RR	2019	2020	141	141		152	
	800	Brutale RR SCS	2019	2020	141	141		152	
	800	Dragster RC	2017	2020	141	141		152	
	800	Dragster Rosso	2019	2020	141	141		152	
	800	Dragster RR	2015	2020	141	141		152	
	800	Dragster RR SCS	2019	2020	141	141		152	
	800	Rivale	2017	2018	328	328		152	
	800	Stradale	2015	2015	328	328		152	
	800	Turismo Veloce	2014	2018	328	328		152	
	800	Turismo Veloce Lusso	2015	2020	328	328		152	
	800	Turismo Veloce Lusso SCS	2019	2020	328	328		152	
	800	Turismo Veloce RC	2017	2018	328	328		152	
	800	Turismo Veloce RC SCS	2019	2020	328	328		152	
	910	Brutale R (Brembo Calipers/4 pads)	2006	2008	177	177		235	
	910	Brutale S (Nissin Calipers)	2006	2008	126	126		235	
	920	Brutale	2011	2012	141	141		235	
	989	Brutale	2008	2009	141	141		235	
	990	Brutale R	2010	2011	141	141		235	
F4	998		2010	2015	258	258		235	
F4	998	R	2012	2015	258	258		235	
F4	998	RR	2010	2015	258	258		235	
F4	998	RR Corsa Corta	2012	2012	258	258		235	
	998	Frecce Tricolori	2010	2010	258	258		235	
F4	1000	Ago	2005	2005	126	126		235	

Type	ccm		from	to	FL	FR	RL	RR	P
F4	1000	R	2006	2007	177	177		235	
F4	1000	R 312 1+1	2007	2008	177	177		235	
F4	1000	R 312 (Brembo 4 Pad Caliper from VIN 008065)	2008	2009	258	258		235	
F4	1000	R 312 (Brembo 4 piston caliper up to VIN 008064)	2007	2007	177	177		235	
F4	1000	S (Mono Posto)	2004	2006	126	126		235	
F4	1000	Ss 1+1 (Bi Posto)	2004	2006	126	126		235	
F4	1000	Tamburini	2005	2005	126	126		235	
F4	1078	CC (Claudio Castigioni)	2007	2008	177	177		235	
F4	1078	RR 312	2009	2009	258	258		235	
	1078	Brutale RR	2008	2009	258	258		235	
	1090	Brutale	2013	2015	141	141		235	
	1090	Brutale R	2012	2015	141	141		235	
	1090	Brutale RR	2010	2015	258	258		235	
		MZ							
		Mastiff 17" FW/Cast Wheel	1999	2005	064			038	
		Scorpion Replica	1995	1996	019				
		Skorpion Sport/Replica/Cup	1995	2001	064			038	
FB	50	Moskito	1997	2003	114				
JP	50	Moskito	2000	2003	114				
SX	50	Moskito	2000	2003	114				
	50	/50 SX Moskito	2002	2002	047				
ETZ	125	/150/250/300	1985	1992	081				
RT	125		2002	2007	332			332	
SM	125	(All Models)	2002	2007	334			332	
SX	125	(All Models)	2002	2007	334			332	
VRT	125	Quad	2005	2005				088	
	125	/251/301/500 Saxon	1993	1997	081				
	125	Moskito	2002	2002	047				
	125	S Mantizz	2005	2007	188				
VRS	150	Quad	2005	2005				047	
	150	Saxon	1995	1995	081				
VRT	175	Quad	2005	2005				088	
	251	/301 Saxon Tour	1993	1998	081				
	251	Fun	1995	1996	081				
	500	Saxon (All models)	1993	1998	081				
	500	Silver Star Classic	1993	1993	081				
	660	(MUZ) Scorpion Cup	1999	2002	019			038	
	660	(MUZ) Scorpion Replica	1997	2002	064	064		038	
	660	(MUZ) Scorpion Traveller	1999	2002	019			038	
	660	(MUZ)Supermotard	2006	2007	105			094	
	660	Baghira 21" FW / Spoke Wheel	1999	2005	105			094	
	660	Baghira Black Panther (17" FW / Spoke Wheel)	1996	2003	105			094	
	660	Baghira Forest / Forest HR (21" FW / Spoke Wheel)	1996	2005	105			094	
	660	Baghira Street Moto (17"FW / Spoke Wheel)	1996	2005	105				
	660	Mastiff (21" FW / Spoke Wheel)	1996	2005	105			094	
	850	KBT	1995	1995	028				
	1000	(MUZ) S	2001	2002	017	017		099	
	1000	(MUZ)SN	2005	2007	017	017		148	
	1000	S	2003	2007	017	017		148	
	1000	SF	2005	2007	017	017		148	
	1000	SFX	2007	2007	017	017		148	
	1000	ST	2007	2007	017	017		148	
		NEW FORCE QUADS							
		Most Models (Check shape of old pad)			284	284		284	
		NIPPONIA							
	50	Brio (4T)	2012	2013	011			332	
	50	EZio (4T)	2012	2014	011				
	100	Miro (4T)	2012	2013	018				
	125	Arte (4T)			332			332	
	125	Brio (4T)	2012	2015	011			332	
	125	Dion (4T)	2013	2015	011			332	
	125	Duel (4T)			334				
	125	EZio (4T)	2012	2014	011				
	125	Miro (4T)	2012	2014	018				
	130	Miro (4T)			018				
	150	Arte (4T)			332			332	
	150	Dion (4T)	2012	2014	011			332	
		NISSIN							
		3 Piston racing rear caliper						229	
		4 Piston Caliper			017				
		6 piston racing caliper			126				
		Racing 3910			219				
		Racing 4808			220				
		NORTON							
	961	Commander SF	2010	2015	177	177		152	
	961	Commando Cafe Racer	2010	2020	177	177		152	
	961	Commando Café Racer	2015	2015	328	328			
	961	Commando Dominator SS	2015	2020	328	328		152	
	961	Commando SE	2010	2011	177	177		152	
	961	Commando SF	2010	2015	328	328		152	
	961	Commando Sport	2010	2020	141	141		152	
F-1			1990	1990	064	064		081	
TT			1992	1992	064	064			

Type	ccm		from	to	FL	FR	RL	RR	P
		Classic (Rotary)	1989	1989	081	081		081	
		Commander (Rotary)	1990	1990	015			015	
		Interpol 2 (Rotary)	1989	1989	081	081		081	
		NOVA/LEGENDS							
		4 Piston			132				
		NVT							
	125	/175 Rambler			184				
		ORION							
AGB	34		2007	2007	250			250	
		OSSA							
TR	125	i	2013	2015	168, 198			173	
TR	250	i	2014	2015	168, 198			173	
	250	Enduro i	2012	2012	031			191	
	250	Explorer i	2014	2015	168, 198			173	
TR	280	i	2010	2015	168, 198			173	
	280	Explorer i	2012	2015	168, 198			173	
TR	300	i	2014	2015	168, 198			173	
	300	Enduro i	2012	2012	031			191	
	500	Yanqee	1978	2015	081			038	
		PHB							
	500		1992	1992	026				
		P.B.H.							
	500		1992	1992	005			005	
	560		1992	1992	005			005	
		PERFORMANCE MACHINES							
		112 X 6B			126				
		112 X 6QC			126				
		112x6RSB			054				
		112x6SSB			054				
		124X4HR			132				
		125 X 2	2009		121				
		125 X 4R			132				
		125 X 4S			121				
		125 X 4SL			121				
		125x6QC			126				
		137 X 4			132				
		137 X 4B			132				
		2 Piston Race Caliper(Pm 0056-1600)						171	
		2/4 Piston (small pad) (PM 0052-T601)						121	
		PETERSON							
SR	50	Racing	1995		114			047	
	50	Hurricane	1995		114			047	
SR	80	Racing	1995		114			047	
	80	Hurricane	1995		114			047	
		PETRONAS							
FP1			2005	2005	177	177		152	
		PEUGEOT							
		Various Scooter models (Check pad shape)			047				
XP6		Enduro / Top Road (21"FW)	2003	2010	121			121	
XP6		Supermoto (17"FW / 240mm)	2003	2009	121			121	
XPS		Enduro	2003	2009	121			121	
XPS		Street (17" FW / 280mm)	2003	2009	122			121	
		Ludix Acid	2006	2006	121				
		Ludix Blaster (10" Wheels)	2005	2009	121				
		Ludix Red Zone	2006	2006	121				
		Ludix Urban Track	2006	2007	121				
NK7	50	Naked	2009	2012	233			289	
RS 12	50	Blaster (2T)	2010	2011	121				
SV	50	Geo	1991	1992	071				
SV	50	Roland Garros (F052DE/G282/0)	1993	1993	094				
SV	50	Sport (F052DE/G281/0)	1993	1993	094				
TRK	50	(2T) (10"wheels)	2009	2012	121				
TRK	50	(2T) (12"wheels)	2009	2012	121				
TRK2	50	WRC (2T)	2004	2006	121				
XP6	50	Track	2003	2008	121			121	
XPS	50	SM	2009	2009	289			289	
XPS	50	Street	2005	2009	122			121	
XPS	50	Supermoto (17"FW / 260mm Disc)	2003	2010	122			121	
XPS	50	Top Road (17" front wheel)	2010	2012	289			121	
XPS	50	Track (21" front wheel)	2011	2012	289			121	
XR6	50	(2T)	2003	2007	095			121	
XR7	50	(2T)	2008	2012	233			289	
	50	Speedfight 3 RS (AC/2T)	2010	2012	011			152	
	50	/100 Vivacity (All models)	1999	2007	121				
	50	1/2 Speedfight (AJP Caliper)	1997	2008	121			137	
	50	Blaster Ice Blade (2T/12" wheels)	2010	2012	121			121	
	50	Buxy (AJP Caliper)	1994	1994	121				
	50	Buxy (Hengtong cal.)	1994	1994	042				
	50	Buxy/Buxy RS	1994	1997	098, 107				
	50	Django Allure (2T/4T)	2014	2018	299				
	50	Django Evasion (2T)	2014	2020	299				

Type	ccm		from	to	FL	FR	RL	RR	P
	50	Django Evasion (4T)	2014	2018	299				
	50	Django Heritage (2T/4T)	2014	2018	334				
	50	Django S (2T)	2014	2018	299				
	50	Django S (4T)	2014	2018	299				
	50	Django Sport (2T)	2014	2020	299				
	50	Django Sport (4T)	2014	2018	299				
	50	Elyseo	2003	2003	121			121	
	50	Elyséo (AJP Caliper)	1998	2002	121				
	50	Elystar Advantage	2002	2007	121			121	
	50	Elystar TSDi	2002	2007	121			211	
	50	E-Vivacity (Electric)	2010	2010	136				
	50	Jet C Tech	2011	2012	121			121	
	50	Jet Darkside (2T)	2011	2013	121			121	
	50	Jet Force / Jet-C	2003	2010	121			121	
	50	Jet Force H2i (2T - Air Cooled)	2011	2012	121				
	50	Jet H2i (2T-L/C)	2011	2012	121			121	
	50	Jet Iceblade (2T)	2011	2013	121			121	
	50	Kisbee (2T/4T)	2010	2020	047				
	50	Kisbee RS (2T/4T)	2010	2020	047				
	50	Looxor	2001	2006	121				
	50	Looxor TSDI (Rear Disc)	2006	2006	121			121	
	50	Ludix 2 Trend (2T)	2007	2011	121				
	50	Ludix Bullet	2004	2004	121				
	50	Ludix Elegance	2004	2009	121				
	50	Ludix Pro (4T/14" wheels/AJP Caliper)	2011	2013	121				
	50	Ludix Pro (4T/14" wheels/J.Juan Caliper)	2011	2013	098, 107				
	50	Ludix Snake	2004	2009	121				
	50	Ludix Trend	2004	2007	121				
	50	Metal X	2002	2003	121				
	50	New Tweet Evo (4T/Rear disc model)	2014	2015	174			137	
	50	New Tweet Evo (4T/Rear Drum Model)	2015	2019	174				
	50	New Tweet Evo RS (4T)	2014	2015	174				
	50	New Vivacity (50cc/2T) (12" wheels/200mm dia disc)	2008	2014	144				
	50	New Vivacity (50cc/4T) (12" wheels/200mm dia disc)	2008	2014	144				
	50	New Vivacity Sixties (50cc/4T) (12" wheels/200mm disc)	2010	2013	144				
	50	Speedfight 1/2 (Heng Tong cal.)	1997	2008	047				
	50	Speedfight 3 (AC/2T)	2009	2015	011				
	50	Speedfight 3 (LC/2T)	2009	2015	011			152	
	50	Speedfight 3 Darkside (50cc/LC/2T)	2013	2015	011			152	
	50	Speedfight 3 Furious (LC/2T)	2013	2013	011			152	
	50	Speedfight 3 Iceblade (50cc/LC/2T)	2013	2015	011			152	
	50	Speedfight 3 -RS (LC/2T)	2009	2012	011			152	
	50	Speedfight 4 20 Ans Edition (50cc/AC/2T)	2018	2018	011				
	50	Speedfight 4 Classic AC (2T/4T)	2015	2020	011				
	50	Speedfight 4 Classic LC (2T/4T)	2015	2020	011			152	
	50	Speedfight 4 Darkside (50cc/AC/LC/2T/4T)	2015	2018	011			152	
	50	Speedfight 4 Iceblade (50cc/AC/LC/2T/4T)	2015	2018	011			152	
	50	Speedfight 4 Pure (50cc/AC/LC/2T/4T)	2015	2018	011			152	
	50	Speedfight 4 R-Cup (AC/LC/2T)	2018	2020	011			152	
	50	Squab (AJP Caliper)	1994	1994	121				
	50	Streetzone (2T)	2014	2018	121				
	50	Trekker (2T) AJP Caliper	1998	2000	121				
	50	Trekker (2T) Heng Tong Caliper	1998	2000	047				
	50	Tweet (4T/Rear Drum Model)	2010	2013	174				
	50	Tweet RS (4T/ Rear Disc Model)	2010	2013	174			137	
	50	V-Clic (4T) (155mm dia. disc)	2008	2013	114				
	50	V-Clic (4T) (160mm dia. disc)	2008	2011	114				
	50	Vivacity (12" Wheels / 190mm Disc) (AJP Caliper)	1992	2007	121				
	50	Vivacity (12" Wheels / 190mm Disc) Heng Tong Caliper	1992	2007	047				
	50	Vivacity 2 (10" Wheels / 190mm Disc) (AJP Caliper)	2008	2011	121				
	50	Vivacity 2 (10" Wheels / 190mm Disc) Heng Tong Caliper	2008	2011	047				
	50	Zenith L (All Models)	1996	1999	098, 107				
SV	80	Geo	1991	1992	071				
SV	100	L	1997	1998	115				
	100	1/2 Speedfight	1997	2009	121			121	
	100	Elyseo	2003	2003	121			121	
	100	Elyséo (AJP Caliper)	1998	2002	121				
	100	Kisbee (4T)	2012	2015	047				
	100	LOOXOR	2001	2004	121			121	
	100	Streetzone (4T)	2014	2015	121				
	100	Trekker (2T)	1998	1998	121				
LXR	125	(4T)	2010	2013	174			286	
RS	125	Geo (Nissin Caliper)	2007	2012	334			334	
SV	125	Geo	1991	1992	071				
WTR	125		2008	2008	332				
XP	125	Street Evo 2	2005	2005	095			121	
XPS	125	CT	2005	2007	121			121	
	125	Citystar Blue Line (AC/Carb)	2015	2015	334			005	
	125	Belville Allure	2018	2020	174			137	
	125	Belville RS	2018	2020	174			137	

Type	ccm		from	to	FL	FR	RL	RR	P
	125	Citystar (AC/Carb)	2011	2015	334			137	
	125	Django Allure (4T / 190mm Rear Disc)	2014	2020	299			005	
	125	Django Allure SBC (4T /190mm Rear Disc)	2014	2020	299			005	
	125	Django Evasion (4T/ 190mm Rear Disc)	2014	2020	299			005	
	125	Django Evasion SBC (4T/ 190mm Rear Disc)	2014	2020	299			005	
	125	Django Heritage (4T/190mm Rear Disc)	2014	2020	334			152	
	125	Django Heritage SBC (4T/190mm Rear Disc)	2014	2020	299			005	
	125	Django S (4T/190mm Rear Disc)	2014	2020	299			005	
	125	Django Sport (4T/ 190mm Rear Disc)	2014	2020	299			005	
	125	Django Sport SBC (4T/190mm Rear Disc)	2014	2020	299			005	
	125	Elyseo (Rear Disc Model)	2003	2003	122			211	
	125	Elyséo (AJP Caliper)	1998	2002	121				
	125	Elystar (3 bolt fixing - front disc)	2002	2005	122			211	
	125	Elystar (5 bolt fixing - front disc)	2006	2007	122			211	
	125	E-Satelis (Electric)	2011	2011	334			334	
	125	Geopolis (Non ABS)(Nissin Caliper)	2007	2012	334			334	
	125	Geopolis Executive/Non ABS (AJP Calipers)	2007	2012	122			211	
	125	Geopolis Urban (AJP Caliper/ABS)	2007	2012	122			211	
	125	i Citystar	2011	2014	334			150	
	125	i Citystar (LC)	2013	2019	334			137	
	125	Jet Force (All Models)	2003	2007	122			211	
	125	LOOXOR	2003	2006	193			121	
	125	Ludix Ambition	2004	2004	121				
	125	New Tweet Evo (4T / Rear disc model)	2014	2020	174			137	
	125	New Tweet Evo (4T)	2014	2020	174			137	
	125	New Tweet Evo RS (4T)	2014	2020	174			137	
	125	Satelis	2013	2013	299			134	
	125	Satelis Blacksat (AJP Caliper)	2010	2012	122			211	
	125	Satelis 4V Executive/Premium/City (4Stroke/4Valve)	2006	2009	122			211	
	125	Satelis Avenue (Nissin Caliper)	2008	2009	334			334	
	125	Satelis Blue Line	2015	2015	334			137	
	125	Satelis Compressor (4T) (all models)	2006	2011	122			211	
	125	Satelis RS	2007	2012	122				
	125	Satelis RS (4T)	2013	2013	334			137	
	125	Satelis RS (AJP Caliper)	2007	2012	122			211	
	125	Satelis Urban (AJP Caliper/ABS)	2007	2012	122			211	
	125	Satelis Whitesat (AJP Caliper)	2010	2011	122			211	
	125	Speedfight 3 (4T)	2014	2015	011			152	
	125	Speedfight 3 Darkside (4T)	2014	2015	011			152	
	125	Speedfight 3 Iceblade (4T)	2014	2015	011			152	
	125	Speedfight 3 Team (4T)	2014	2015	011			152	
	125	Speedfight 4 (4T)	2017	2018	299			047	
	125	Sum-Up	2008	2011	144				
	125	Tweet (4T/Rear Disc Model)	2012	2013	174			137	
	125	Tweet (4T/Rear Drum Model)	2010	2012	174				
	125	Tweet RS (4T/Rear Disc Model)	2010	2013	174			137	
	125	Vivacity	2010	2015	334				
	125	Vivacity Sixties (4T)	2011	2012	334				
	150	Tweet (4T/Rear Drum Model)	2010	2012	174				
	150	Citystar (AC/Carb)	2011	2015	334			137	
	150	Citystar i (LC)	2013	2015	334			137	
	150	Citystar One	2013	2014	334			137	
	150	Django Allure (4T/ 190mm Rear Disc)	2014	2018	299			005	
	150	Django Evasion (4T/190mm Rear Disc)	2014	2019	299			005	
	150	Django Heritage (4T/196mm Rear Disc)	2014	2020	334			152	
	150	Django S (4T / 190mm Rear Disc)	2014	2020	299			005	
	150	Django Sport (4T/ 190mm Rear Disc)	2014	2019	299			005	
	150	Elyseo	1998	2002	121				
	150	Elyseo (Rear Disc Model)	2003	2003	122				
	150	Elystar (3 bolt fixing - front disc)	2002	2005	122			211	
	150	Elystar (5 bolt fixing - front disc)	2006	2007	122			211	
	150	Looxor	2003	2006	193			121	
	150	New Tweet Evo (4T)	2014	2018	174			137	
	150	New Tweet Evo RS (4T)	2014	2018	174			137	
	150	Tweet (4T/Rear Drum Model)	2010	2012	174				
	150	Tweet RS (4T/Rear Disc Model)	2010	2012	174			137	
LXR	200	i (4T)	2010	2012	174			286	
	200	Belville Allure	2018	2019	174			137	
	200	Belville RS	2018	2019	174			137	
	200	Citystar i	2012	2018	334			137	
RS	250	Geo (Nissin Caliper)	2007	2012	334			334	
RS	250	Satelis (Nissin Calipers)	2007	2012	334			334	
SV	250		2001	2002	135			020	
	250	Geopolis Urban (AJP Caliper/ABS))	2007	2010	122			211	
	250	Geopolis (Executive/AJP/ Calipers/ Non ABS)	2007	2010	122			211	
	250	Geopolis (Premium/Nissin Calipers/ Non ABS)	2007	2012	334			334	
	250	i Enduro	2012	2012	031				
	250	Satelis Premium (Nissin Calipers)	2007	2012	334			334	
	250	Satelis Urban (AJP Caliper/ABS)	2007	2012	122			211	
RS	300	Geo (Nissin Calipers)	2010	2012	334			334	
	300	Geopolis	2010	2015	334			334	
	300	Geopolis GT	2014	2014	022			334	

Type	ccm		from	to	FL	FR	RL	RR	P
	300	Geostyle (Nissin Calipers)	2010	2012	334			334	
	300	i Enduro	2012	2012	031				
	300	Satelis (4T)	2013	2014	334			334	
	300	Satelis 2 (4T)	2014	2015	334			334	
RS	400	Geo (Nissin Calipers)	2008	2012	334			334	
RS	400	Satelis 2	2014	2015	022	022		334	
	400	Geopolis (Urban / AJP Calipers /ABS)	2007	2012	122			211	
	400	Metropolis Allure (3 Wheel Model/ Nissin Caliper)	2017	2018	287	287		332	047
	400	Metropolis Blue Line (3 Wheel Model)	2015	2016	280	280		280	047
	400	Metropolis RS (3 Wheel Model)	2014	2014	284	284		284	
	400	Metropolis RS (3 Wheel Model/Nissin Caliper)	2017	2018	287	287		332	047
	400	Metropolis RX-R (3 Wheel Model / Nisan Caliper)	2017	2018	287	287		332	047
	400	Metropolis T (3 Wheel Model)	2014	2016	280	280		280	047
	400	Metropolis T-RS (3 Wheel Model)	2014	2016	280	280		280	047
	400	Satelis 2 (4T)	2014	2015	022	022		334	
	400	Satelis Premium (Nissin Calipers)	2008	2011	022	022		334	
	400	Satelis RS (Nissin Calipers)	2008	2014	022	022		334	
	400	Satelis Urban (Nissin Calipers/ABS)	2008	2012	022	022		334	
	500	Geopolis	2008	2011	022	334			
	500	Satelis	2007	2012	022	022		334	
	500	Satelis RS (Nissin Calipers)	2008	2012	022	022		334	
		PGO							
PMX	50	/110	2000	2007	174				
PMX	50	Naked			174				
	50	Big Max	1994	2006	114				
	50	Big Max (Front wave disc)	2007	2009	174				
	50	Big Max Naked (Round Disc/No Cover on H-Bars)	2007	2009	174				
	50	Big Max S	2003	2004	174				
	50	Bugrider (Buggie)	2006	2006	288	288		144	
	50	Comet	1991	1991	047				
	50	Comet	1993	1993	114				
	50	Galaxy	1993	2000	047				
	50	G-Max	2005	2007	174				
	50	G-Max (Wave disc)	2008	2009	174				
	50	G-Max Naked (Wave disc)	2009	2009	174				
	50	Hot	1997	1997	114				
	50	Libra (2T)	2009	2009	174				
	50	Ligero (2T)	2008	2012	174				
	50	Mega	1994	1994	047				
	50	My Bubu	2003	2003	107				
	50	Road 66	1995	1995	047				
	50	Rodo Show	2000	2009	098, 107				
	50	Tornado	1997	1997	114				
	50	T-Rex	1999	2012	174				
	50	T-Rex 3 (3 wheeler)	2003	2004	174	174			
	50	X-Rider	2003	2003				047	
	80	Big Max	1994	1994	114				
	90	Big Max	1997	1997	114				
	90	Galaxy	1992	1992	047				
	90	Rodoshow	2000	2006	107				
	90	Tornado	2000	2000	114				
	100	/125 My Bubu	2002	2002	174				
	100	/125 Young Bubu	2002	2002	174				
	100	Big Max	1996	1996	114				
	100	Bubu	2003	2008	174				
PMX	110		2000	2000	114				
	110	T-Rex	1999	2006	174				
	125	Bubu	2003	2008	174				
	125	G Max	2006	2008	064			332	
	125	G Max (Wave Disc)	2009	2012	064			332	
	125	Charge A/B	2001	2002	174				
	125	i-Charge	2003	2005	174				
	125	Kung Fu			017			114	
	125	Libra EFi (4T)	2009	2012	174				
	125	Ligero	2006	2008	174				
	125	Ligero (4T)	2008	2012	174				
	125	Tigra (4T/4V)	2012	2012	174			137	
	125	Tornado	1996	1996	114				
	125	Tornado	1997	1997	114				
	125	T-Rex (Wave disc)	2008	2012	174				
	125	X-Rider	2003	2003				047	
BR	150	A Bugxter	2005	2007	288	288		144	
TR-3	150	(3 wheeler)	2003	2009	174	174			
	150	50/90/110 Rider	2004	2005				047	
	150	Bugrider			288	288		144	
	150	Libra (4T)	2009	2009	174				
	150	TR3	2002	2002	174				
	150	T-Rex	2001	2001	174				
	150	X-Rider	2003	2003				047	
BR	200	Bugrider	2007	2012	288	288		283	
BR	250	E Bugrider	2005	2012	288	288		283	
	250	Bug			288	288		283	
	250	Bugrider			288	288		144	

Type	ccm		from	to	FL	FR	RL	RR	P
	250	G Max	2006	2008	064			332	
	250	SS Bugrider (Single Seat)			288	288		144	
BR	500	i Racer	2007	2009	329	329		230	
	500	Bug	2008	2009	329	329		230	
BR	600	i Bug Racer	2012	2012	329	329		230	
EPS			1997	1997	114				
RS2		NKD	2005	2005	122			121	
XL		Rider	2007	2008				047	
		i-Dep Electric Scooter	2009	2009	174			174	
		PIAGGIO VESPA							
ET2	50	(Vespa)	1997	2005	137				
ET4	50	Vespa (Grimeca Caliper)	2000	2004	137				
ET4	50	Vespa (Heng Tong caliper)	2000	2004	137				
LX	50	(2T/4T)	2005	2013	137				
LXV	50		2007	2009	137				
NRG	50	(DD/DT) "MC2" (Rear Drum Models)	1998	1998	098, 107				
NRG	50	Extreme (Rear Disc Models)	1999	2001	098, 107			137	
NRG	50	Extreme (Rear Drum Models)	1999	2001	098, 107				
NRG	50	MC3 DD	2001	2005	098, 107			137	
NRG	50	Power DD	2006	2018	042			137	
NRG	50	Power DT	2005	2015	042				
NRG	50	Pure Jet	2006	2009	042			137	
NRG	50	RST "MC" (Rear Drum Models)	1996	1997	098, 107				
NRG	50	RST "MC2" (Rear Disc Models)	1998	1998	098, 107			137	
NRG	50	Silver Bullet	2010	2010	042			137	
RST	50	Sfera	1995	1997	142				
S	50	(2T)	2007	2013	137				
S	50	(4T/4V)	2009	2013	137				
S	50	Sport (2T/4T)	2011	2013	137				
S	50	Sport (4T/4V)	2011	2013	137				
ZIP	50	(2T)	2000	2015	137				
ZIP	50	(4T)	2000	2020	137				
ZIP	50	(Grimeca caliper) (A/C 4T)	2000	2008	137				
Zip	50	Base (Disc Model)	1995	1996	098, 107				
ZIP	50	Elettrico	2002	2002	098, 107				
ZIP	50	Fast Rider	1993	1997	098, 107				
ZIP	50	RST	1996	1999	137				
ZIP	50	SP (Liquid cooled)	1996	2012	137				
ZIP	50	SP (2T)	2013	2015	137				
	50	Diesis	2001	2005	121				
	50	Fly (2T)	2005	2018	293				
	50	Fly (4T)	2005	2018	293				
	50	Free	2002	2002	098, 107				
	50	Free - Delivery	2000	2001	115				
	50	Free (Disc Model)	1995	2000	115				
	50	Liberty (2T/4T) (10" Spoke Cast Wheels)	2009	2014	293				
	50	Liberty (Grimeca Caliper) (2T/5 Spoke Wheels)	1997	2008	137				
	50	Liberty (Heng Tong Caliper) (2T/5 Spoke Wheels)	1997	2008	137				
	50	Liberty 4T (Grimeca Caliper) (5 Spoke Wheels)	2000	2008	137				
	50	Liberty 4T (Heng Tong Caliper) (5 Spoke Wheels)	2000	2008	137				
	50	Liberty S (2T/4T)	2007	2008	137				
	50	New Fly (4T/4V)	2012	2013	293				
	50	Primavera (2T)	2013	2015	293				
	50	Primavera (4T/4V)	2013	2015	293				
	50	Primavera Touring (2T)	2015	2015	293				
	50	Primavera Touring (4T/4V)	2015	2015	293				
	50	Quartz	1992	1996	118				
	50	Sfera RST	1995	1997	118				
	50	Sprint (4T/3V)	2014	2020	293				
	50	Sprint S (2T)	2015	2015	293				
	50	Storm	1994	1995	107				
	50	Typhoon	1994	2000	098				
	50	Typhoon (2T) (12"wheels)	2010	2018	293				
	50	Typhoon (2T) (Grimeca Caliper / 10" Wheels)	2000	2004	098, 107				
	50	Typhoon (2T) (Heng Tong caliper/10" wheels)	2001	2009	098, 107				
LX	60	(Special Anniversary Model)	2006	2006	118				
ZIP	100		2006	2013	137				
	100	Diesis	2001	2003	121				
	100	Fly (4T)	2007	2015	293				
	100	Free	2002	2002	098, 107				
946	125	Special (4T/3V/cc)	2013	2015	293			186	
ET4	125	Vespa	1996	2005	137				
GT	125	L Granturismo	2003	2006	122			186	
GT	125	L Granturismo (Heng Tong caliper)	2003	2006	293				
GTS	125		2007	2011	293			186	
GTS	125	Super ie (inc ABS Models)	2009	2020	293			186	
GTS	125	Supersport ie (Inc ABS Models)	2013	2015	293			186	

Type	ccm		from	to	FL	FR	RL	RR	P
GTV	125		2007	2009	293			186	
LX	125	(4T)	2005	2012	137				
LX	125	(4T/Serie Special)	2012	2012	137				
LX	125	Skipper	1998	1999	122				
LX4	125	Hexagon	1998	1999	122				
LXV	125		2007	2013	137				
MP3	125	(Carb Models) (12" Rear Wheel)	2006	2008	137	137		263	
MP3	125	Hybrid	2009	2012	137	137			303
MP3	125	Hybrid (14" rear wheel)	2009	2012	137	137		266	
MP3	125	ie (EFi Models)	2008	2011	137	137		266	303
MP3	125	Yourban ie	2011	2012	137			266	
PX	125	(Disc Brake Model) (2T) (Up to 30/04/2011)	1998	2011	118				
PX	125	(Disc Brake Model) (2T) (From 01/05/2011)	2011	2016	137				
PX	125	Touring (Disc brake model)	2015	2015	118				
S	125	(4T)	2007	2013	137				
S	125	Sport (4T)	2011	2013	137				
X10	125	ie (4V/4T/EFI/All Models)	2012	2015	293	266		266	
X7	125	cc	2008	2009	293			266	
X7	125	Evo ie (EFI)	2009	2012	293			266	
X8	125	(Brembo Rear Caliper)	2004	2005	293			152	
X8	125	(Heng Tong Rear Caliper)	2005	2006	293			263	
X8	125	ie (Heng Tong Rear Caliper)	2007	2007	293			263	
X8	125	Street	2007	2007	293				
X9	125	Evolution	2005	2007	293	266		152	
X9	125	Evolution (Brembo Single pin Fixing)	2003	2004	152			152	
ZIP	125	(4T - 175mm F/Disc)	2002	2004	137				
ZIP	125	(4T - 200mm F/Disc)	2000	2001	137				
	125	Beverly	2007	2007	293				
	125	Beverly (4T) (Multi spoke cast wheel)	2011	2014	293			266	
	125	Beverly B (Grimeca Caliper)	2003	2006	122			122	
	125	Beverly B (Heng Tong Caliper)	2002	2006	293			293	
	125	Beverly ie S	2014	2015	293			266	
	125	Beverly S	2007	2007	293			293	
	125	Beverly Tourer	2008	2009	293			293	
	125	Carnaby	2007	2009	293			293	
	125	Fly (4T/2V)	2005	2011	293				
	125	Fly (4T/3V) Rear Disc Model	2012	2015	293				
	125	Hexagon	1994	1995	098, 107				
	125	ie Fly (4T/3V) Rear Disc Model	2012	2015	293			186	
	125	Liberty (5 Spoke Wheels)	1998	2008	137				
	125	Liberty (4T/3V) (10 Spoke Cast Wheels)	2009	2012	137				
	125	Liberty (4T/3V) (10 Spoke Cast Wheels)	2013	2015	137				
	125	Liberty (Full Optional/4T) (10 Spoke Cast Wheels)	2013	2015	137				
	125	Liberty S	2007	2008	137				
	125	Medley (ABS)	2016	2020				266	
	125	Medley S (ABS)	2016	2020				266	
	125	New Fly ie (3V)	2012	2013	293			186	
	125	Primavera (4T/3V/ABS)	2013	2020	293				
	125	Primavera (4T/3V/Non ABS)	2013	2015	293				
	125	Primavera Touring (4T/3V/ABS)	2015	2015	293				
	125	Primavera Touring (4T/3V/Non ABS)	2015	2015	293				
	125	Sfera	1995	1997	142				
	125	Sfera 4T	1996	2001	142				
	125	Skipper	1994	1997	118				
	125	Skipper ST (4T)(Grimeca caliper)	2000	2004	122				
	125	Skipper ST (4T)(Heng Tong caliper)	2000	2004	293				
	125	Sprint (4T/3V/ABS)	2015	2020	293				
	125	Sprint S (4T/3V/ABS)	2015	2020	293				
	125	Sprint S (4T/3V/Non ABS)	2015	2020	293				
	125	Super Hexagon GTX (11" Wheels) (Grimeca Calipers)	2000	2000	122			186	
	125	Super Hexagon GTX (11" wheels) (Heng Tong Calipers)	2000	2000	293			186	
	125	Super Hexagon GTX (12" wheels)	2001	2003	293			186	
	125	Typhoon	1996	1998	142				
	125	Typhoon	1999	2003	098, 107				
	125	Typhoon (4T) (12"wheels)	2010	2015	293				
	125	X9	2001	2002	152			152	
	125	Xevo	2007	2016	293			266	
ET4	150	Vespa	1999	2005	137				
LX	150	(4T)	2005	2011	137				
LX	150	(4T/Serie Special)	2012	2012	137				
LX	150	Skipper	1998	1999	122				
PX	150	(Disc Brake Model)	1998	2015	118				
PX	150	Touring (Disc brake model)	2015	2015	118				
S	150	(4T)	2007	2012	137				
S	150	Sport (4T)	2011	2012	137				
X8	150	Street	2007	2007	293			263	
	150	Fly (4T)	2005	2012	293				
	150	Hexagon	1994	1997	098, 107				
	150	Liberty (4T/2V) (10 Spoke cast wheels)	2009	2012	137				
	150	Liberty (3V/4T) (10 Spoke Cast Wheels)	2013	2015	137				
	150	Liberty (5 Spoke Wheels)	2008	2008	137				
	150	Liberty (Full optional/4T/3V) (10 Spoke Wheel)	2013	2015	137				
	150	Medley (ABS)	2016	2020				266	
	150	Medley S (ABS)	2016	2020				266	
	150	Primavera (4T/3V/ABS)	2013	2020	293				
	150	Primavera (4T/3V/Non ABS)	2013	2015	293				
	150	Primavera Touring (4T/3V/ABS)	2015	2015	293				
	150	Primavera Touring (4T/3V/Non ABS)	2015	2015	293				
	150	Skipper	1994	1997	118				
	150	Skipper ST (4T) (Heng Tong Caliper)	2000	2004	293				
	150	Sprint S (4T/3V/ABS)	2015	2020	293				
LX	180	Hexagon	1998	1999	122				
LXT	180	Hexagon	1998	1999	122				
X9	180	Amalfi	2000	2003	152			152	
	180	Super Hexagon GTX (11" wheels) (Grimeca Caliper)	2000	2000	122			186	
	180	Super Hexagon GTX (11" wheels) (Heng Tong Calipers)	2000	2000	293			186	
	180	Super Hexagon GTX (12" Wheels)	2001	2003	293			186	
GT	200	L Granturismo	2003	2006	122			186	
GT	200	L Granturismo (Heng Tong caliper)	2003	2006	293				
Liberty	200		1998	2007	137				
PX	200	(Disc Brake Model)	1998	2007	118				
X8	200	(Brembo Rear Caliper)	2002	2003				152	
X8	200	(Heng Tong Rear Caliper)	2004	2005	293				
X9	200		2002	2003	152			152	
X9	200	Evolution	2003	2004	152			152	
	200	Beverley	2003	2005	122			122	
	200	Beverly B	2002	2005	293			293	
	200	Carnaby	2007	2009	293			293	
	200	Liberty	1998	2007	137				
	200	Liberty S	2007	2008	137				
GT 60	250	(Special Anniversary Model)	2006	2006				186	
GTS	250	ie/ABS	2005	2011	293			186	
GTV	250	ie	2007	2009	293			186	
MP3	250	(EFI) (12" Rear Wheel)	2006	2008	137	137		263	303
MP3	250	LT (EFi) (14" Rear Wheel)	2009	2009	137	137		266	303
MP3	250	MIC/EFi (14" rear wheel)	2008	2009	137	137		266	
X7	250	cc ie	2008	2009	293			266	
X8	250	ie	2005	2007	293			263	
X9	250		2005	2006	293	266		263	
X9	250	(Linked brake F&R wheel 14")	2004	2004	031			152	
X9	250	/SL	2000	2004	152	152		152	
XVS	250	Tricker	2005	2005	099				
	250	Beverley S ie	2007	2007	293			293	
	250	Beverly (Carb.)	2004	2007	293			293	
	250	Beverly Cruiser ie	2007	2008	293			293	
	250	Beverly ie	2006	2007	293			293	
	250	Beverly Tourer ie	2008	2009	293			293	
	250	Carnaby ie	2008	2009	293			293	
	250	Hexagon GT	1998	1999	122				
	250	Super Hexagon GTX	2000	2002	122			186	
	250	Xevo ie	2007	2010	293			266	
GTS	300	ie (ABS Models)	2008	2020	266			186	
GTS	300	ie (Non ABS Models)	2008	2015	293			186	
GTS	300	ie Super (Non ABS Models)	2008	2015	293			186	
GTS	300	ie Super Sport (ABS Models)	2008	2018	266			186	
GTS	300	ie Super Sport (Non ABS Models)	2010	2015	293			186	
GTS	300	ie Touring (ABS Models)	2011	2017	266			186	
GTS	300	ie Touring (Non ABS Models)	2011	2016	293			186	
GTS	300	Super (ABS Models)	2008	2020	266			186	
GTV	300	ie	2010	2013	293			186	
MP3	300	Business LT 300 ie ABS (13" Front Wheel/ 14" Rear Wheel)	2014	2018				266	303
MP3	300	Business LT ie	2013	2013	137	137		266	303
MP3	300	ie (Hybrid LT)	2011	2013	137	137		266	303
MP3	300	ie (Hybrid)	2011	2015	137	137		266	303
MP3	300	ie Yourban Sport LT	2011	2016	137	137			303
MP3	300	LT (EFi)	2010	2011	137	137		266	303
MP3	300	Sport LT 300 ie ABS (13" Front Wheel/ 14" Rear Wheel)	2014	2018				266	303
MP3	300	Sport LT ie	2013	2013	137	137		266	303
MP3	300	Touring ie	2011	2012	137	137		266	303
MP3	300	Touring LT ie	2011	2012	137	137		266	303
MP3	300	Yourban LT ie	2011	2016	137	137		266	303
MP3	300	Yourban Sport ie	2011	2016	137	137		266	303
MP3	300	Yourban LT RL	2017	2018	137	137		266	303
X7	300	Evo	2009	2012	293			266	
	300	Beverly (278cc/4T) (Multi spoke cast wheel)	2010	2015	293			266	
	300	Beverly ie S	2014	2020	293			266	
	300	Beverly Police ABS ASR (278cc)	2016	2018	293			266	
	300	Carnaby Cruiser	2008	2011	293			293	
	300	Carnaby ie	2012	2012	293			293	
X10	350	ie (4V/4T/EFi)	2012	2015	293	266		266	303
	350	Beverly ie Sport Touring (Non ABS/330 cc/4T)	2011	2015	193			266	
	350	Beverly ie Sport Touring ABS (330cc/4T)	2011	2015	193			266	
	350	Beverly ie Sport Touring ABS (330cc/4T)	2016	2020	293			266	

Type	ccm		from	to	FL	FR	RL	RR	P
MP3	400	ie	2007	2010	137	137		293	303
MP3	400	LT ie	2009	2010	137	137		293	303
MP3	400	Touring ie	2011	2012	137	137		293	303
MP3	400	Touring LT ie	2011	2012	137	137		293	303
X8	400	ie	2006	2008	293	266		293	
	400	Beverley ie	2007	2007	031			293	
	400	Beverley Tourer ie	2008	2009	152	152		152	
	400	Trackmaster Quad	2006	2006	254	254		254	
	400	Xevo ie	2007	2010	293	266		293	
MP3	500	EFi	2009	2010	137	137		266	303
MP3	500	LT Business	2011	2015	137	137		293	303
MP3	500	LT Business ABS (13" Front Wheel/14" Rear Wheel))	2014	2020	137	137		293	303
MP3	500	LT Sport	2011	2015	137	137		293	303
MP3	500	LT Sport ABS (13" Front Wheel/14" Rear Wheel)	2014	2018	137	137		293	303
MP3	500	Touring Business ie	2011	2012	137	137		293	303
MP3	500	Touring Sport ie	2011	2012	137	137		293	303
X10	500	ie (4V/4T/EFi)	2012	2015	293	266		266	303
X9	500	/500 SL	2000	2002	152	152		152	
X9	500	cc Evolution (Inc. ABS)	2003	2006	031	031		152	
X9	500	ie	2007	2007	031	031		152	
	500	Beverley	2006	2006	152	152		263	
	500	Beverley B	2002	2004	152	152		152	
	500	Beverley Cruiser ie	2007	2011	152	152		152	
	500	Beverley ie	2012	2012	152	152		152	
GTS		4V ABS/Super Sport/Touring	2018	2019	293			186	
		Liberty Elettrico	2011	2012	137				
		PIZZA PEDS							
	125	Pizza Delivery Scooter (4T)	2012	2015	144				
		POLARIS							
EV		Ranger (Electric)	2010	2014	313	313		312	
PPS		/PTV 4x4/Series 10			162	162		209	
PPS		/PTV 6x6/Series 10			162	162		208	
PPS		/UTV/Series 10 2x4			312	312		312	
PPS		LUH 6x6	2002	2002	162	162		208	
PPS		Series 11 2x4/4x4			312	312		312	
PPS		Series 11 6x6			312	312		312	
PPS		UTV/Series 10 4x6			312	312		312	
RZR		XP 4 Turbo	2016	2016	391	391	313	313	
RZR		XP Turbo	2016	2016	391	391	313	313	
UTV		2x4 (Utility task vehicle series 10)	2003	2003	312	312		312	
		Ranger 2x4/4x4	2002	2005	312	312		312	
		Ranger 48v EV	2013	2013	313	313		312	
		Ranger 6x6	2004	2005	312	312			
		Ranger Series 10 "500 6x6"			312	312	312	312	
		Ranger Series 11			312	312	312	312	
		Ranger TM	2004	2005	312	312	312	312	
		Ranger TM	2006	2006	312	312	312	312	
		Ranger XP	2005	2005	312	312	312	312	
		Rear pad most models	1989	2000			216	216	
		Trail Blazer	1990	1993	162	162		216	
RZR	170	Ranger	2009	2014	342	342		337	
	200	Sawtooth (Rear Drum Model)	2006	2008	047	047			
	200	Phoenix (AA/AB Model/Rear Drum Model)	2005	2005	162	162			
	200	Phoenix (AC/AD Model and following/ rear Drum model)	2006	2009	047	047			
	200	Phoenix (Rear Drum Model)	2010	2014	342	342			
	200	Phoenix Quadricycle Model (EA/EB/ Rear Disc Model)	2005	2005	162	162		005	
	200	Phoenix Quadricycle Model (EC/ED Models / Rear Disc Model)	2005	2009	047	047		005	
	200	Phoenix Quadricycle Model (Rear disc Model)	2010	2010	342	342		005	
	200	Sawtooth Quadricycle (Rear Disc Model)	2006	2006	047	047		005	
	200	Sawtooth Quadricycle (Rear Disc Model)	2008	2008	047	047		005	
	250	2x4/4x4	1990	1990	162	162		216	
	250	2x4/4x4	1993	1993	162	162		216	
	250	Big Boss 4x6	1989	1992	162	162		216	
	250	Big Boss 6x6	1991	1993	162	162		216	
	250	Trail Blazer	1994	1998	162	162		216	
	250	Trail Blazer	1999	2000	162	162		179	
	250	Trail Blazer (Freedom)	2001	2004	162	162		179	
	250	Trail Blazer	2005	2006	162	162		209	
	250	Trail Boss	1988	1990	162	162			
	250	Trail Boss	1991	1999	162	162		216	
	250	Trail Boss 2x4/4x4	1988	1989	162	162		216	
	250	Trail Boss 2x4/4x4	1991	1992	162	162			
	250	Trail Boss 4x4	1987	1987	144	144		216	
	250	Xplorer 4x4	2000	2000	162	162		179	
	300	2x4/4x4	1994	1995	162	162		216	
	300	Big Boss 6x6	1994	1994	162	162		216	
	300	Hawkeye 2x4	2006	2006	254	254	254	254	
	300	Hawkeye 2x4	2008	2009	162	162		162	
	300	Hawkeye 2x4/4x4	2007	2007	162	162	162	162	
	300	Hawkeye 4x4	2006	2006	254	254	254	254	
	300	Sportsman 4x4	2008	2010	162	162		162	

Type	ccm		from	to	FL	FR	RL	RR	P
	300	Xplorer 4x4	1996	2000	162	162		216	
	300	Xpress 2x4	1998	2000	162	162		216	
	300	Xpress L	1996	1997	162	162		216	
	325	2x4 Hawkeye	2015	2015	162	162		300	
	325	Magnum (2x4) HDS)	2002	2002	162	162		209	
	325	Magnum 2x4/4x4	2000	2000	162	162		179	
	325	Magnum 2x4/4x4 Moose	2001	2001	162	162		179	
	325	Magnum 4x4 (A02CD32AA/AB/AC)	2002	2002	162	162		209	
	325	Magnum 4x4 HDS (A02CD32FB)	2002	2002	162	162		209	
	325	Ranger ETX	2015	2016	312	312		312	
	325	Sportsman Ace	2014	2014	313	313		312	
	325	Sportsman Ace EFi	2015	2015	313	313		312	
	325	Sportsman Ace Euro	2014	2015	313	313		312	
	325	Sportsman Ace HD	2015	2015	313	313		312	
	325	Trail Boss	2000	2002	162	162		179	
	325	Xpedition	2000	2000	162	162		179	
	325	Xpedition	2002	2002	162	162		209	
	330	ATP	2004	2005	162	162		162	
	330	Magnum (2x4/HDS)	2003	2006	162	162		209	
	330	Magnum (4x4/HDS)	2003	2004	162	162		209	
	330	Trail Blazer	2008	2009	162	162		209	
	330	Trail Blazer	2010	2013	162	162		209	
	330	Trail Boss	2003	2004	162	162		179	
	330	Trail Boss	2005	2009	162	162		209	
	330	Trail Boss	2010	2013	162	162		209	
	335	Sportsman 4x4	1999	2000	162	162		179	
	350	Big Boss L	1993	1993	162	162		209	
	350	L 2x4/4x4	1990	1990	162	162		209	
	350	L 4x4	1993	1993	162	162		209	
	350	Sportsman 4x4	1993	1993	162	162		209	
	350	Trail Boss L 2x4	1991	1993	162	162		209	
	350	Trail Boss L 4x4	1991	1991	162	162		209	
	400	Big Boss L 6x6	1994	1997	162	162		209	
	400	Big Boss L 6x6 (Middle Axle Brake)	1996	1996				236	
	400	Hawkeye HO (2x4)	2011	2014	162	162		300	
	400	L 2x4	1994	1995	162	162		209	
	400	L 4x4	1994	1994	162	162		209	
	400	Ranger	2010	2014	313	313	312	312	
	400	Scrambler (2x4/4x4)	2000	2000	162	162		179	
	400	Scrambler 2x4	2002	2002	162	162		179	
	400	Scrambler 4x4	1999	1999				179	
	400	Scrambler L 4x4	1995	1997	162	162		216	
	400	Sport	1999	2000	162	162		179	
	400	Sport L	1994	1998	162	162		216	
	400	Sportsman	2001	2002	162	162		179	
	400	Sportsman	2003	2005	162	162		209	
	400	Sportsman HO (4x4)	2011	2014	162	162		300	
	400	Sportsman HO 4x4	2008	2010	162	162		162	
	400	Sportsman L 4x4	1994	1997	162	162		216	
	400	Trail Blazer	2003	2003	162	162		179	
	400	Xplorer 4x4	2001	2002	162	162		179	
	400	Xplorer L 4x4	1995	1998	162	162		216	
	400	Xplorer L 4x4	1999	2000	162	162		179	
	400	Xpress L	1996	1997	162	162			
	425	Big Boss 6x6 (Middle Axle Brake)	1996	1996				236	
	425	Magnum (2x4/4x4)	1995	1998	162	162		216	
	425	Magnum 6x6	1996	1997	162	162		216	
	425	Magnum 6x6 (Middle Axle Brake)	1996	1996				236	
	425	Xpedition 4x4	2000	2000	162	162		179	
MXR	450	Outlaw	2009	2010	343	343		162	
	450	S Outlaw	2008	2008	343	343		162	
	450	Sportsman	2006	2007	162	162		209	
	455	Diesel	2001	2001	162	162		179	
	455	Diesel EBS 4x4	1999	2000	162	162		179	
ATV	500	Pro 4x4 TPS	2002	2002	162	162		209	
	500	ATP HO (4x4)	2004	2005	162	162	162	162	
	500	Big Boss 6x6	1998	1999	162	162		216	
	500	Magnum	2001	2001	162	162		179	
	500	Magnum (4x4 HDS)	2002	2003	162	162		209	
	500	Magnum 4x4	2000	2001	162	162		179	
	500	Outlaw	2006	2007	162	162		162	
	500	Predator/TLD	2003	2007	162	162		162	
	500	Ranger (Carb) 2x4	2009	2009	313	313	312	312	
	500	Ranger (EFi) 4x4 HO	2009	2011	313	313	312	312	
	500	Ranger 4x4	2006	2007	312	312	312	312	
	500	Ranger 4x4 EFi	2006	2007	312	312	312	312	
	500	Ranger 4x4 EFi	2008	2008	313	313	312	312	
	500	Ranger 4x4 EFi	2011	2013	312	312	312	312	
	500	Ranger 6x6	2000	2002	162	162			
	500	Ranger Series 10 6x6			312	312	312	312	
	500	Revolver	2006	2006	162	162	162	162	
	500	Scrambler 2x4	2001	2002	162	162		179	
	500	Scrambler 2x4	2007	2008	162	162		209	
	500	Scrambler 4x4	1997	1997	162	162		216	
	500	Scrambler 4x4	1998	2004	162	162		179	

Type	ccm		from	to	FL	FR	RL	RR	P
	500	Scrambler 4x4	2005	2012	162	162		209	
	500	Sportman 6x6	2000	2008	162	162		208	
	500	Sportsman 4x4	1996	1997	162	162		216	
	500	Sportsman EFI Quad H.O.	2008	2013	162	162	209	209	
	500	Sportsman EFi/HO	2007	2008	162	162	209	209	
	500	Sportsman Forest	2012	2012	162	162		209	
	500	Sportsman HO (After 16/12/2008)	2009	2012				300	
	500	Sportsman HO/EFi	2003	2006	162	162	209	209	
	500	Sportsman Touring EFi	2008	2011	162	162		209	
	500	Sportsman Touring H.O.	2008	2011	162	162	162	162	
	500	Sportsman Touring H.O.	2011	2013	162	162	312	312	
	500	Sportsman X2	2006	2008	162	162	209	209	
	500	Sportsman X2 EFi	2007	2009	162	162		162	
	500	Sportsman/Worker 4x4 EBS/500 RSE	1998	2002	162	162		179	
	500	XP Sportsman	2009	2009	300	300		300	
	500	Xplorer 4x4	1997	1997	162	162		209	
	525	Outlaw IRS	2008	2011	343	343		162	
	525	S Outlaw	2008	2010	343	343		162	
	550	Sportsman	2011	2013	300	300		300	
	550	Sportsman EPS	2010	2014	300	300		300	
	550	Sportsman Forest	2010	2010	300	300		300	
	550	Sportsman Touring EPS	2010	2014	300	300		300	
	550	Sportsman X2	2010	2014	300	300		300	
	550	Sportsman XP Touring EPS	2012	2012	300	300		300	
	550	X2 Sportsman	2010	2014	300	300		300	
	550	XP Sportsman	2009	2013	300	300		300	
	550	XP Sportsman EPS	2009	2014	300	300		300	
RZR	570		2014	2020	343	343	162	162	
	570	Forest Tractor EFi/EPS	2015	2015	162	162		300	
	570	Sportsman 6x6	2017	2018	162	162		300	
	570	Sportsman 6x6 Tractor	2017	2018	162	162		300	
	570	Sportsman Ace	2015	2020	313	313		312	
	570	Sportsman Ace Euro	2015	2020	313	313		312	
	570	Sportsman EFI (Inc EPS)	2011	2015	162	162		300	
	570	Sportsman EFi HD	2014	2018	162	162		300	
	570	Sportsman EFi UTE	2014	2018	162	162		300	
	570	Sportsman EFi X2 EPS	2014	2018	162	162		300	
	570	Sportsman SP	2015	2018	162	162		300	
	570	Sportsman SP Touring	2015	2018	162	162		300	
	570	Sportsman Touring EFi EPS	2014	2015	162	162		300	
	570	Sportsman Touring Tractor EFi EPS	2016	2018	162	162		300	
	600	Sportsman 4x4	2003	2005	162	162		209	
X2	700	Sportsman	2008	2008	162	162		162	
XP	700	Ranger 4x4	2006	2006	312	312	312	312	
XP	700	Ranger 4x4	2008	2008	313	313	312	312	
	700	Ranger 4x4 EFi	2009	2009	313	313	312	312	
	700	Ranger 4x4 EFi/LE	2007	2007	312	312	312	312	
	700	Ranger 6x4 EFi	2008	2008	313	313	312	312	
	700	Ranger 6x6 EFi	2006	2009	312	312	312	312	
	700	Ranger Crew (EFi) 4x4	2009	2009	313	313	313	313	
	700	Sportsman (4x4)/EFI	2002	2006	162	162		209	
	700	Sportsman EFi	2007	2007	162	162		209	
	700	Sportsman MV	2005	2006	162	162		209	
RZR	800	Ranger	2008	2014	343	343	162	162	
RZR	800	Ranger S EFi	2010	2014	313	313	162	162	
RZR-4	800	Ranger	2010	2014	313	313	312	312	
RZR-4	800	Ranger EPS	2012	2012	313	313	312	312	
X2	800	Sportsman EFi	2007	2009	162	162		162	
	800	Ranger 6x6	2010	2014	313	313	312	312	
	800	Ranger Crew	2010	2014	313	313	313	313	
	800	Ranger TM	2006	2006	312	312		312	
	800	Ranger XP	2010	2012	313	313	312	312	
	800	Sportsman	2012	2014	300	300		300	
	800	Sportsman Big Boss /6x6 / EDi	2009	2012	162	162		209	
	800	Sportsman EFi	2005	2006	162	162		209	
	800	Sportsman EFI	2010	2013	162	162		300	
	800	Sportsman EFi 6x6	2009	2009	162	162		162	
	800	Sportsman EFi Intl/HO	2007	2011	162	162		209	
	800	Sportsman HO/EFi (After 16/12/2008)	2009	2009	162	162		300	
	800	Sportsman HO/EFi (Up to 15/12/2008)	2008	2008	162	162		209	
	800	Sportsman Touring EFi	2008	2009	162	162		162	
	850	Forest	2015	2015	300	300		300	
	850	Scrambler	2013	2018	300	300		300	
	850	Sportsman Forest	2012	2015	300	300		300	
	850	Sportsman SP	2015	2018	300	300		300	
	850	Sportsman Touring EPS	2010	2014	300	300		300	
	850	Sportsman Touring HO EPS	2013	2015	300	300		300	
	850	Sportsman Touring SP	2015	2018	300	300		300	
	850	Sportsman XP Touring EPS	2012	2012	300	300		300	
	850	XP Sportsman	2009	2015	300	300		300	
	850	XP Sportsman EPS	2009	2014	300	300		300	
RZR	900	"50 Inch All Options"	2015	2019	343	343		343	
RZR	900	Brutus	2013	2017	313	313	312	312	
RZR	900	Ranger XP	2011	2011	313	313		312	
RZR	900	Ranger XP EFi	2012	2012	313	313			

Type	ccm		from	to	FL	FR	RL	RR	P
RZR	900	Ranger XP White Lightning LE	2011	2011	313	313	312	312	
RZR	900	S "60 Inch All Options"	2015	2019	343	343		343	
	900	D Ranger 4x4 Diesel	2011	2014	313	313		313	
	900	D Ranger Crew Diesel			313	313		313	
RZR	1000	XP	2014	2014	313	313		313	
XP	1000	Scrambler	2020	2020	300	300		300	
	1000	Forest	2015	2015	300	300		300	
	1000	General 4 EPS (4 Seat)	2017	2020	313	313		343	
	1000	General EPS (2 Seat)	2016	2020	313	313		343	
	1000	Ranger Diesel	2015	2015	313	313		312	
	1000	Ranger Diesel Crew	2015	2015	313	313		312	
	1000	Scrambler	2014	2018	300	300		300	
	1000	Scrambler XP	2014	2018	300	300		300	
	1000	Sportsman MD/XP	2015	2018	300	300		300	
	1000	Sportsman Touring	2015	2018	300	300		300	
	1000	Sportsman Touring Tractor	2016	2018	300	300		300	
	1000	Sportsman XP Tractor	2016	2018	300	300		300	
PPS	1500	Series II UTV 2x4			312	312		312	
		POLINI							
		GRC			201				
X1R	50	H20			190			190	
X2	50	R	2004	2004	190			190	
X3R	50	H20			190			190	
XP4	50	Street (10" wheels)			173			173	
X5	65	RP	2005	2005	190			190	
XP	65	R			173			173	
XP4T	110	Cross 12" front/10" rear wheel			201			201	
XP4T	110	Cross 14" front/12" rear wheel			201			201	
	110	cc Mini Motard 10"wheels (2pin fixing)			201			201	
XP4	125	Street (10" wheels)			173			173	
XP4	125	Off Road (14" front/12" rear wheel)			173			173	
		PRAGA							
ED	250		1999	1999	031			023	
CD	610		1999	1999	031			023	
		PRE TECH							
		4 Piston (P402) Lockheed replacement caliper			032				
		4 Piston caliper (UNI P401)			090				
		6 Piston (Radial Mount)			126				
		6 Piston caliper			054				
		PRO ONE							
		2 Piston			038				
		4 Piston Caliper			032				
		PROTOS							
	50	Ellisse Scootercar	1998	1998	098				
		PUCH							
		all models	1986	1986	159				
		Condor	1990	1990	121				
M	50	SDP Cast Wheel / Grand Prix Supreme	1975	1977	159				
M	50	SDP Spoke Wheel / Grand Prix Special	1975	1977	159				
TZX	50		1992	1992	121				
	50	Cobra 6 GT, GTL	1980	1980	159				
	50	Monza 4 SL, GSL	1980	1980	159				
	75	Cobra	1985	1985	121				
		PUZEY							
MTD	300	(4T/4V) (Motard model)	2011	2012	002			176	
MX	300	(4T/4V) (Enduro model)	2011	2012	002			176	
		PVM							
		2 Piston Rear Caliper (Note only 2 pads required)			239				
		4 Piston Radial Mount Caliper			239				
		6 Piston Caliper (Old design)			123				
		QUADRO							
	350	4	2014	2015	098, 107	098, 107		047	047
	350	D	2011	2015	098, 107	098, 107		047	047
	350	S	2013	2015	098, 107	098, 107		047	047
		QUADZILLA							
RS5		4 WD	2010	2011	284	284		281	216
RS6		EFi 4WD	2010	2011	284	284		281	216
RS7		4WD	2010	2011	230	230		005	
RS8			2010	2011	230	230		005	
X7R			2010	2011	230	230		005	
X8		4x4/EFi	2012	2015	284	284		281	
Z6		4x4	2010	2013	284	284		281	
		Magmax						047	
		Pro Shark (Double 4 Arms)						047	
		Pro Shark-E	2006	2006				047	
		Z8 4x4 (Side x Side/800cc)	2014	2015	002	009			
R	50	(Rear disc model)	2003	2006				216	
X	50							047	
ZR	50		2007	2009				047	
WK	70	(Front disc model)	2006	2009	114	114			
M	100	Blackmax (SE)	2006	2006				047	
R	100	(Rear Disc Model)	2006	2009				047	
X	100	E (XLC)	2006	2007				047	

Type	ccm		from	to	FL	FR	RL	RR	P
	100	Black Max M (SE)	2006	2006				047	
	100	Pro Shark (Single 4 Arms)						047	
	100	Pro Shark RMX (Front Disc Models)	2007	2007	005	005		047	
WK	110		2006	2008	114	114		011	
RV	125	Midi RV Bug			288	288		144	
WK	125		2006	2009	114	114		011	
WK	140		2006	2008	250	250			
BR	150	E Bugrider	2004	2006				144	
CVT	150	E	2010	2011	284	284		283	179
RV	150	Midi RV Buggie			288	288		144	
RAM	170	R	2003	2005				002	
RAM	170	R Stinger E	2003	2005				002	
	170	Stingr R E	2006	2006				002	
BR	200		2007	2008	288	288		144	
QZ	200	(Front disc model)			005	005		005	
RMX	200	Pro Shark	2007	2008	005	005			
ST	200	E (5 Speed Manual)	2006	2007	047	047		005	
ST	200	E (Automatic)	2006	2006				002	
	200	4 Cross E SUV	2006	2007	047	047		005	
	200	cc 4 Cross						009	
BR	250				288	288		144	
QZ	250	(Front disc model)			005	005		005	
RAM	250	R	2003	2005				002	
RAM	250	R Stinger E	2003	2005				002	
XRV	250							144	
XRV	250	(Off road)	2006	2007	288	288		283	
XRV	250	E	2006	2007	288	288		283	
	250	e	2006	2011	005	005		005	
	250	Stinger R E	2006	2006	047	047		005	
QZ	270				005	005		005	
CUV	300	(4x4 Super Utility Side x Side)	2008	2008	294	294		284	
CUV	300	E 4x4 Side x Side	2008	2009	294	294		179	
QZ	300	E 4x4						179	283
QZ	300	XLC			005	005		005	
RL	300	Buggie	2007	2008	288	288		283	
RL	300	Buggie	2009	2011	005	005		005	
SUV	300	E (Auto)	2006	2006	284	284		179	
SUV	300	E (Manual)	2006	2007	284	284		179	
WK	300		2006	2008	334			332	
XL	300				288	288		144	
XLC	300	e	2007	2008	005			005	
XLC	300	e Stinger	2007	2008	005	005		005	
	300	E 4x4 (Auto)	2006	2006	284	284	179	179	
	300	E XLC	2006	2007	047	047		005	
	300	Jow	2007	2008	005	005		005	
	300	Quadzilla Utility	2004	2006	284	284		179	
	300	SE 4 Valve	2006	2007	047	047		005	
	300	Stinger e	2009	2011	005			005	
CUV	320				005	005		005	
CVT	320	E	2007	2011	284	284		283	
QZ	320	E 4x4	2009	2009				179	283
	320	E 4x4	2007	2008	284	284		283	
	325	4x4	2010	2011				294	
	400	(4x4)	2006	2007				179	
QZ	450	RS	2006	2009	005	005		005	
QZ	450	Sport	2008	2009	005	005		005	
CUV	500	Side x Side	2010	2011	284	284		281	216
QZ	500	E/ES 4x4	2010	2011	284	284		281	216
RL	500	Buggie	2008	2009	072	072		072	
RL	500	MK II Buggie	2010	2011	284	284		281	
RS	500	5 4WD	2010	2011	284	284			
XLC	500		2010	2015	005	005		005	
	500	4x4	2009	2011	284	284			
Z8	800	4x4 (Side x Side/800 cc)	2014	2015			362	362	
		QUINGOI							
QM	125	2V	2002	2002	099				
		REAL							
	80	Nevada Sport			159				
		REVTECH							
		CCI Polished Caliper (CC 159-110)			064			064	
		New Black 4 Piston Caliper			132				
		RIEJU							
MIUS		Eletric	2012	2015	047			047	
MRT	50	(Single piston caliper)	2009	2020	289			289	
MRT	50	Pro (Radial/double piston caliper)	2009	2020	152			289	
MRT	50	Pro Supermotard (Rad.cal./Cast wheel)	2009	2020	152			289	
MRT	50	Supermotard (Cast wheel/single piston caliper)	2009	2020	289			289	
MRX	50		2003	2008	121			121	
MRX	50	Castrol	2001	2002	095			121	
MRX	50	Pro	2004	2008	122			121	
MTR	50	Pro Competizione (Spoke wheel)	2011	2014	278			346	
NKD	50		2007	2007	215			121	
NKD	50		2008	2010	210			289	
RR	50	Castrol	2000	2002	095			121	
RR	50	Sport	2003	2006	121			121	

Type	ccm		from	to	FL	FR	RL	RR	P
RR	50	Supermotard	1996	1996	121			121	
RR	50	Thunderfire	1997	2002	121			121	
RRX	50		2006	2009	121			121	
RRX	50	Spike (17" wheels/Spoke wheel)	2003	2008	121			121	
RRX	50	Spike (17" Cast wheel)	2006	2009	121			121	
RS	50	NKD (Scooter)	2013	2020	047			098, 107	
RS	50	Sport (Scooter)	2012	2020	047			098, 107	
RS1	50		1997	2000	121			121	
RS1	50		2001	2004	095			121	
RS2	50	FR	2009	2010	210				
RS2	50	Matrix	2002	2008	215			211	
RS2	50	Matrix/Pro	2007	2010	210			289	
RS2	50	NKD	2005	2005	122			121	
RS2	50	Pro	2006	2009	122				
RS3	50		2011	2015	215			289	
RS3	50	Pro	2011	2015	215			289	
RS3 NKD	50		2012	2020	152			047	
SMX	50		2001	2002	095			121	
SMX	50		2002	2006	121			121	
SMX	50	(Cast wheel)	2007	2008	121			121	
SMX	50	Pro Street	2006	2008	122			121	
SMX	50	Pro Supermotard / Top	2004	2007	122			121	
	50	Pacific (4T)	2008	2008	136				
	50	Spike	2004	2006	121			121	
	50	Spike Pro	2004	2004				121	
	50	Spike X	2006	2007	121			121	
	50	Tango (2T)	2007	2012	152			211	
	50	Tango (2T)	2013	2015	278			211	
	50	Tango (4T)	2007	2008				121	
	50	Tango (Spoke wheel)	2011	2011	289			211	
	50	Tango Motard	2009	2010	289			211	
	50	Tango Motard (Cast wheel)	2011	2011	289			121	
	50	Toreo (4T)	2007	2008	136				
	50	Urban Blast	2013	2015	047				
MRX	125		2002	2008	095			121	
NKD	125		2006	2007	215			211	
NKD	125		2008	2010	210			289	
RS2	125		2006	2008	215			211	
RS2	125	/ Pro	2007	2010	210			289	
RS3	125	(Sport)	2011	2020	215			047	
RS3 NKD	125		2012	2020	152			047	
SMX	125		2002	2007	095			211	
SMX	125		2007	2008	152			211	
	125	City Line ie	2013	2015	293			152	
	125	Marathon (Air cooled)	2010	2015	289			289	
	125	Marathon Pro (Radial /double piston caliper)	2009	2020	152			289	
	125	Marathon Pro Competizione	2011	2014	278			346	
	125	Marathon Pro Supermotard (Cast wheel/Rad.cal.)	2009	2020	152			289	
	125	Marathon SM (Air cooled/Cast Wheel)	2010	2015	289			289	
	125	Marathon Supermotard	2011	2015	289			289	
	125	Pacific (4T)	2008	2008	136				
	125	Pacific Scooter	2009	2009	136				
	125	Tango	2006	2010	152			211	
	125	Tango (4T)	2011	2020	278			211	
	125	Tango Motard (Cast wheel)	2008	2010	152			289	
	125	Tango Pro	2007	2010	152			211	
	200	Marathon Pro SM	2011	2015	152			289	
	250	Marathon	2009	2010	031			191	
	250	Tango	2008	2011	152			211	
	250	Tango	2012	2015	278			211	
	300	City Line ie	2014	2015	293			152	
MRX	450		2008	2010	031			191	
	450	Marathon	2009	2010	031			191	
		RIXE							
RS	80	W	1982	1982	159				
		ROXON							
SM	50	Duel	2006	2006	121			121	
TT	50	Duel	2006	2006	121			121	
NFS	150	Sport Spirit (Quad)	2004	2006				047	
RX	150	(Quad)	2004	2006				047	
		ROYAL ENFIELD							
		Bullet Electra X (All disc models) (Dual Seat)	2005	2015	334				
		Himalayan	2016	2020	031			023	
	500	Bullet (EFi/Single Seat)	2016	2018	031			023	
	500	Bullet Battle Green EFi (Single Seat)	2009	2015	334				
	500	Bullet Classic EFi (Single Seat)	2009	2015	334				
	500	Bullet Classic Chrome EFi (Single Seat)	2009	2015	334				
	500	Bullet Desert Storm (EFi/Single Seat)	2012	2015	334				
	500	Bullet EFi (Dual Seat)	2009	2015	334				
	500	Classic (EFi/Single Seat)	2016	2020	031			023	
	500	Classic Chrome (EFi/Single Seat)	2016	2018	031			023	
	500	Clubman EFi (Single Seat)	2009	2012	334				

Type	ccm		from	to	FL	FR	RL	RR	P
	500	Electra EFI	2009	2014	334				
	500	Fury	2011	2012	334				
	500	Trails EFi	2009	2012	334				
	500	Woodsman EFi	2010	2012	334				
	535	Continental GT (ABS)	2017	2020	106			023	
	535	Continental GT (Non ABS)	2013	2016	106			023	
	650	Continental Twin	2018	2018				023	
	650	Interceptor Twin	2018	2018				023	
		SACHS							
ER	49	10"	2007	2007	071				
ER	49	12"	2008	2008	136				
	50	Speedforce (2T)	2008	2008	136				
SX-1	50	(2T)	2008	2009	136				
	50	Bee	2008	2010	018				
	50	Mad Ass (4T)	2006	2009	011			144	
	50	Madass (2 Stroke)	2004	2005	011			121	
	50	Madass (4 stroke)	2004	2005	011				
	50	Speedjet (2T)	2008	2008	136				
	50	Supra 4 GP			086				
XTC	125	N	2000	2007	064				
XTC	125	Supersport	2000	2007	064			094	
ZX	125	Enduro	2001	2001	122				
ZZ	125	Funbike	2002	2002	122				
	125	Bee	2008	2009	018				
	125	Dirty Devil	2008	2008	173			173	
	125	Mad Ass (4T)	2006	2009	011			144	
	125	Madass	2005	2005	011			011	
	125	Roadster	2000	2003	095				
	125	Speedjet RS	2010	2010	136			137	
	125	X-Road	2006	2007	064				
	400	Quattrocento	2008	2008	022	022			
	650	Roadster	2005	2005	064	064		018	
B-805	800		2003	2004	064				
	800	Roadster	2001	2005	064	064		094	
		SANGLAS							
	400	Y	1979	1980	038	038		038	
	500	S2	1979	1980	038	038		038	
		SCARABEO							
	50	(4T/4V)	2010	2015	042				
	50	Net (4T/4V)	2010	2011	042				
	50	Street (2T)	2010	2015	042				
	50	Yourz (4T)	2012	2014	047				
	100	(4T)	2010	2014	042				
	125	ie	2010	2015	193			150	
	125	Net	2010	2011	193			150	
	200	ie	2010	2015	193			150	
	200	Net	2010	2011	193			150	
	300	S	2009	2011	193			150	
	500	ie	2010	2011	010	010		150	
		SCOMADI							
TL	50	Air Cooled	2015	2019	011				
TL	125	Air Cooled	2015	2019	011				
TL	200	Liquid Cooled	2015	2019	011			174	
		SCORPA							
SR	125	(2T)	2010	2013	168, 198			199	
SR	125	Long Ride (2T)	2010	2011	168, 198			199	
SY	125	4T Long Ride	2009	2010	198			173	
SY	125	F	2003	2010	168, 198				
SY	125	FR (4T)	2003	2009	168, 198			173	
SY	125	FR (4T)	2009	2011	168, 198			199	
TY	125	(4T)	2011	2015	168, 198			173, 199	
TYS	125	F	2006	2008				173	
TY-S	125	F	2006	2008	121				
TY-S	125	F Enduro	2003	2005	121			121	
	125	T-Ride F (Enduro)	2010	2010	278			211	
	125	T-Ride (2T)	2012	2015	047			047	
	125	Twenty (2T)	2015	2015	168, 198			173	
SY	175	F	2006	2006	168, 198			173	
TY-S	175	F	2006	2006	121			173	
SY	200	F (4T)(163cc)	2008	2008	168, 198			173	
SY	250	(2T)	2000	2005				173	
SY	250	F	2006	2010	168, 198			199	
SY	250	F	2006	2010				173	
SY	250	F Long Ride (4T)	2007	2008	168, 198			173	
SY	250	FR	2006	2010	168, 198			173	
SY	250	FR Long Ride	2010	2010	168, 198			173, 199	
SY	250	Long Ride (2T)	2004	2006	168, 198			173	
SY	250	R (2T)	2000	2009	168, 198			173, 199	
	250	Easy	1996	1996	121			121	

Type	ccm		from	to	FL	FR	RL	RR	P
	250	T-Ride F (Enduro)	2008	2010	278			211	
	250	Twenty (2T)	2015	2015	168, 198			173, 199	
SR	280	(2T)	2009	2014	168, 198			173, 199	
SR	280	(2T) Long Ride	2009	2011	168, 198			173, 199	
	280	T-Ride (2T)	2012	2015	047			047	
	280	Twenty	2014	2014				199	
	300	Twenty (2T)	2015	2015	168, 198			173	
	660	Raidster (Rear pad with large friction area)	2007	2007	141			173	
		SFM							
	50	Bee (2T)	2014	2015	018				
	50	Speedjet (2T)	2014	2015	136				
	50	Speedjet R (2T)	2014	2015	136				
	50	Speedjet RS 3 (2T)	2014	2015	136			137	
SFM	125	A8 Roadster	2013	2015	334				
ZX	125	Enduro (Spoke wheels)	2013	2015	011			332	
ZZ	125	Enduro (Spoke wheels)	2013	2015				332	
ZZ	125	SM (Cast Wheels)	2013	2015	011				
	125	Bee (4T)	2014	2015	018				
		SHE-LUNG							
	50	Falcon	1997	1997	114				
	50	Racer	1996	1996	107				
	125	Mars	1997	1997	114				
		SHERCO							
EN	50	Enduro	2008	2009	122				
EN	50	Enduro (50 EN)	2003	2007	095			121	
EN	50	Champion Replica	2008	2008	122				
SE	50	0,5	2011	2011	289			121	
SE-R	50	Factory	2019	2020	047			047	
SE-RS	50	Factory	2019	2020	047			047	
SM	50	0,5	2011	2011	289			121	
SM	50	Black Panter	2008	2010	122			211	
SM	50	Replica Cup	2008	2008	122				
SM	50	Supermotard	2003	2007	095			121	
SM	50	Supermotard	2008	2013	122			211	
SM-R	50	Americas	2019	2020	047			047	
SM-R	50	Factory	2019	2020	047			047	
SM-RS	50	Americas	2019	2020	047			047	
SM-RS	50	Factory	2019	2020	047			047	
SU	50	Urban Base (2T) (Cast wheels)	2010	2010	289			211	
	50	Enduro (2T)	2002	2007				121	
	50	Enduro (Urban/SU (2T) (Spoke Wheel)	2008	2013	122			211	
	50	SE-R	2014	2015	047			047	
	50	SM-R	2014	2015	047			047	
	50	Supermotard (2T)	2002	2007				121	
ST	80	(2T/Braktec Caliper)	2014	2015	168, 198			173	
ST	80	2T (Formula caliper)	2013	2014	308			173	
	80	0,8	2001	2005	121				
	80	Trials 0.8 (2T)	2006	2010	168, 198			173	
FST	125		2018	2019	168, 198			173	
SC	125	Factory	2019	2020	031			191	
SE	125	1.25 F	2011	2011	289			121	
SE	125	F Enduro (4T)	2010	2012	122			211	
SE-R	125		2019	2020	031			191	
SM	125		2003	2006	095			121	
SM	125	1.25 F Black Panther	2011	2011	289			121	
SM	125	F Black Panther (4T)	2010	2012	122			211	
ST	125	(2T/Braktec Caliper)	2014	2015	168, 198			173	
ST	125	2T (Formula caliper)	2013	2014	308			173	
ST-R	125		2018	2019	168, 198			173	
TY	125	Classic	2018	2019	168, 198			173	
XY	125	(4T)	2014	2015	168, 198			173	
	125	City Corp (All Models)	2003	2007	095			121	
	125	City Corp (All Models)	2008	2008	122			211	
	125	Trials 1.25 (2T) (AJP Caliper)	2006	2012	168, 198			173	
	125	X-Ride	2012	2020	047			047	
2.5i	250	Enduro (4T)	2006	2009	031			187	
SC	250	Factory	2019	2020	031			191	
SCF	250	Factory	2019	2020	031			191	
SE	250	Factory	2019	2020	031			191	
SE	250	i (2T/Brembo Rear Caliper)	2012	2015	031			191	
SE	250	i Enduro (Brembo rear Caliper) (2T)	2012	2015	031			191	
SEF	250	(4T)	2013	2015	031			191	
SEF	250	Factory	2019	2020	031			191	
SEF-R	250		2019	2020	031			191	
SEF-R	250	(4T)	2013	2015	031			191	
SE-R	250		2019	2020	031			191	
SE-R	250	(2T)	2012	2015	031			191	
ST	250	(2T/Braktec Caliper)	2014	2015	168, 198			173	

Type	ccm		from	to	FL	FR	RL	RR	P
ST	250	2T (Formula caliper)	2013	2014	308			173	
ST	250	Factory	2018	2019	168, 198			173	
ST-R	250		2018	2019	168, 198			173	
SX	250	2.5i Moto Cross	2010	2010	031			187	
	250	Trials 2.5 (2T) (AJP Caliper)	2006	2012	168, 198			173	
ST	290	(2T/Braktec Caliper)	2014	2015	168, 198			173	
ST	290	2T (Formula caliper)	2013	2014	308			173	
ST	290	Cabastany Replica (2T/Formula Caliper)	2012	2012	308			173	
	290	Trials 2.9 (2T) (AJP Caliper)	2006	2012	168, 198			173	
	290	X-Ride	2012	2020	047			047	
FST	300		2018	2019	168, 198			173	
SC	300	Factory	2019	2020	031			191	
SCF	300	Factory	2019	2020	031			191	
SE	300	Factory	2019	2020	031			191	
SE	300	i (2T/Brembo Rear Caliper)	2012	2015	031			191	
SE	300	i Enduro (2T) (Brembo Rear Caliper)	2012	2015	031			191	
SEF	300	(4T)	2013	2015	031			191	
SEF	300	Factory	2019	2020	031			191	
SEF-R	300		2019	2020	031			191	
SEF-R	300	(4T)	2013	2015	031			191	
SE-R	300		2019	2020	031			191	
SE-R	300	(2T)	2012	2015	031			191	
ST-R	300		2018	2019	168, 198			173	
	300	Enduro SE 3.0i (4T)	2010	2010	031			187	
ST	305	(2T/Braktec Caliper)	2014	2015	168, 198			173	
ST	305	2T (Formula caliper)	2013	2014	308			173	
	320	Trials 3.2 (2T) (AJP Caliper)	2005	2012	168, 198			173	
4.5i	450	Enduro	2005	2011	031				
SCF	450	Factory	2019	2020	031			191	
SE	450	iR Enduro (Nissin Rear Caliper)	2012	2012	031			187	
SEF	450	(4T)	2014	2015	031			191	
SEF	450	Factory	2019	2020	031			191	
SEF-R	450	(4T)	2014	2015	031			191	
SE-R	450		2019	2020	031			191	
SE-R	450	(2T)	2014	2015	031				
SM	450		2004	2008	031				
SM	450	4.5 iF Black Panther	2008	2012	177			187	
SM	450	4.5i F Supermoto	2004	2007	177			187	
SM	450	i	2004	2009	031			187	
	450	4.5 i Enduro	2004	2004	031				
SCF	500	Factory	2019	2020	031			191	
SEF	500	Factory	2019	2020	031			191	
SEF-R	500		2019	2020	031			191	
5.1i	510	Enduro (4T)	2006	2009	031			187	
5.1i	510	Supermotard	2006	2009	031			187	
SE	510	iR (Nissin Rear Caliper)	2012	2012	031			187	
SM	510	5.1 iF Black Panther	2008	2012	177			187	
SM	510	5.1iF Supermotard	2007	2007	031				
	510	Enduro 5.1iF	2007	2010	031				
SM		2.5i Supermotard	2008	2008	031			187	
SM		5.1 iF Supermotard	2007	2007	031			187	
		All Models 1.2-2.0	2001	2005	121			121	
		Enduro 2.5i F (4T) (inc SE models)	2008	2010	031			187	
		Enduro 4.5i	2004	2010	031			187	
		Enduro 5.1 iF	2007	2011	031			187	
		Trials 0.8 (2T)	2001	2004	121				
		Trials 1.25 (2T)	1999	2005	121			121	
		Trials 2.0 (2T)	1999	2005	121			121	
		Trials 2.5 (2T)	1999	2005	121			121	
		Trials 2.9 (2T)	1999	2005	121			121	
		SIAM							
	50	Falcon	1997	1997	098				
	50	Mat	1997	1997	042				
	50	Scross	1997	1997	098				
	100	Mat	1997	1997	042				
		SIAMOTO							
		Favorite	2002	2004	114				
	50	Birdie	2002	2004	114				
BD	125		2002	2002	095				
KD	125		2000	2004	018				
SX 1	125		2004	2004	122			121	
	250	Geco	2004	2004	030				
		SIMSON							
	50	Habict CX	2001	2001	038				
	50	Spatz	1999	1999	038				
	50	Sperber	1999	1999	038				
	50	Star	1999	1999	038				
SR	80	-2 CE			038				
	80	IFA	1989	1989	038				
S	83	CX			038				
S	83	OR			038				

Type	ccm		from	to	FL	FR	RL	RR	P
	125		2001	2001	010			094	
	125	RS	2001	2001	010			094	
	125	Schikra	1999	1999	010			038	
	125	SM	2001	2001	095			121	
	125	Star	1999	1999	121				
		SINNIS							
		Apache (Rear drum models)	2009	2010	002				
LJ	50	QT-H (Rear disc model)	2012	2014	136			144	
LJ	50	QT-H Phoenix (Rear drum model)			136				
QM	50	Hawk 50 10A-(C)	2008	2010	334				
QM	50	QT-2T Falcon	2008	2010	114				
QM	50	QT-6A Jet	2008	2010	114				
QM	50	T-10 R Eagle 50	2010	2012	334				
WY	50	T-39A Ghost	2006	2010	136				
X-Pro	50		2013	2014	174				
ZN	50	QT-30A Strada 50	2012	2014	334				
ZN	50	QT-51 Flair	2012	2014	136				
	50	Nitro (2T)			011				
	50	Orbit II (4T)	2012	2014	174				
	50	Orbit II Naked (4T)	2012	2014	174				
	50	Orbit II TS (4T)	2012	2014	174				
	50	Pioneer (2T)			136				
	50	Strike (2T)	2009	2010	011				
JS	125	6C SC	2012	2014	099				
JS	125	6H ST	2013	2014	144				
QM	125	GY-2B Blade	2009	2014	002			144	
QM	125	-2D Stealth	2008	2010	334	332		020	
QM	125	2V2 Max II	2012	2014	289				
QM	125	GY-2B(A) Apache (Rear disc model)	2009	2014	002			144	
QM	125	GY-2D Trackstar (4T)	2010	2014	289				
QM	125	GY-2X Cafe	2012	2014	289				
QM	125	GY-2XR Retro Star	2012	2014	289				
QM	125	T Matrix	2010	2010	144				
QM	125	T-10H Matrix II	2010	2014	144				
QM	125	T-10R Eagle	2010	2014	144				
QM	125	T-8G Ecocity	2007	2014	144			152	
QM	125	Vista 2C	2008	2010	289				
RSX	125		2019	2020	031			306	
ZN	125	T-22 Harrier	2012	2014	136				
ZN	125	T-30A Strada	2012	2014	334				
ZN	125	T-ES Spirit	2012	2014	334				
	125	Apache SM	2015	2020	002			144	
	125	Apache SMR	2017	2020	002			144	
	125	Blade QM GY-2B	2008	2010	002				
	125	Blade X	2015	2020	002			144	
	125	Max QM 125-2V	2008	2009	099				
	125	Nitro (WY 125 T-56A)	2009	2010	011				
	125	Pioneer	2009	2010	136				
	125	Sublime	2009	2010	018				
QM	250	GY-D Apache 250	2013	2014	002			009	
		SJP							
		2 Piston caliper (30-375)			121			121	
		4 Piston caliper (30-370)			121			121	
		SMC							
	50	Easy Rider	1997	1997	042				
YB	125		2009	2009	011			011	
YB	150		2009	2009	011			011	
YB	250		2009	2009	011			011	
		SPIEGLER BREMSTECHNIK							
S 8B 8		Piston Lightweight caliper			130				
S4B4		piston caliper			139				
		8 Piston light weight calliper			145	145			
		STOMP MINI MOTO							
	125	Elite	2007	2009	250				
KZ	140	F			042			303	
KZR	140	F			042			303	
Z	140	F			042			303	
		SULA							
	50	City Bird	1999	1999	114				
	50	Thunder Bird	1999	1999	047	047			
	100	Thunder Bird	1999	1999	047	047			
	125	Thunder Bird	1999	1999	047				
		SUPERBYKE							
CQ	50	Road Classic			210			011	
RFX	50	Road Trail			289				
	50	M-Ped Road Classic			114				
CU	125	Road Classic			210			011	
RFX	125	Road Trail			289				
RMR	125		2007	2009	002			144	
RMX	125		2007	2008	011			011	
	125	M-Ped Road Classic			011				
R-SR	250				011			011	
		SUZUKI							
AD	50	T/Tune/V-Tune	1988	1988	047				
AE	50	R	1988	1988	047				
AJ	50	ZZ/RS Sepia	1992	1992	047				

GOLD fren

Type	ccm		from	to	FL	FR	RL	RR	P
AP	50	R/S/T/V/W	1996	2002	098, 107				
AY	50	V/WV/W/WW/WRW/WRX/WX/WRY/ WRJ1/WRJ2/WRJ3/WRJ4/K1/K2/K3 Katana (Grimeca Caliper)	1997	2004	098, 107				
AZ	50	RY/RK2 (ZZ Inch Up Sport)	2000	2002	109				
CP	50	C			047				
CR	50	DC			047				
GSXR	50		1987	1987	005				
OR	50	ET	1980	1980	005				
RB	50	H	1987	1987	005				
RG	50	EW			005				
TR	50	SW/SX	1998	2000	109				
UX	50	WX/WY Zillion	1999	2002	098, 107				
ZR	50	SKX/SKE/SKH	1983	1987	005				
ZR	50	SLKX	1981	1981	005				
RM	65	K3/K4/K5	2003	2005	167			144	
RM	80	T/V/W/X/Y/K1	1996	2001	109			047	
RM	80	XG/XH/XJ/XK	1986	1989	047				
RM	80	XL/XM/XN/XP/XR/XS	1990	1995	047			047	
RM	85	K2/LK2/K3/LK3/K4/LK4	2002	2004	109			047	
RM	85	K5/K6/K7/K8/K9/L0/L2/L5/L6/L7 (Small 17" FW / 14" RW)	2005	2020	108			226	
RM	85	LK5/LK6/LK7/LK8/LK9/LL0/LL2/LL5/LL6/ LL7 (Big 19" FW / 16" RW)	2005	2010	108			226	
RM	85	Oversize with 240mm disc	2005	2008	108			226	
AH	100	P Address	1995	1996	047				
RM	100	K3	2003	2003	108			007	
UG	110	W/SW/Y/SY/SK1 Hokuto/Address	1998	2002	109				
UK	110	L5/L6/L7/L8 Address	2015	2018	109				
FD	112	Shogun-R	2004	2004	332				
AN	125	HKK5	2006	2008	042				
AN	125	S/T/V/W/XX	1994	2000	109				
DF	125				144				
DR	125	SEX/SEY	1999	2001	144				
DR	125	SF/SH/SJ	1985	1994	144				
DR	125	SMK8/SMK9/SML0	2008	2012	041			003	
DR-Z	125	LK3/LK4/LK5/LK6/LK7/LK8/LK9/LL0-LL9	2003	2020	109				
EN	125	-2/125-2A	2005	2005	002				
FL	125	SDWK7/SDWK8 Address/Underbone	2007	2010	332				
FX	125				332				
GN	125	ER/EV/EW/EX/EY/EK1 (NF41A)	1994	2001	005				
GN	125	HS (LC6PCJB1 / Chinese production)	2000	2010	005				
GN	125	R/V/W/X/Y/K1 (NF41A)	1994	2001	005				
GN	125	Z/D/K Gold Coloured Cast Wheels/ Aisin Caliper	1982	1990	289				
GS	125	ESD/ESF/ESK/ESM	1983	1994	289				
GS	125	ESR/ESX	1995	2000	005				
GS	125	ESZ	1982	1982	005				
GSX-R	125	RLXL8/RLL8	2018	2020	381			311	
GSX-S	125	MLXL8/MLL8	2018	2020	381			311	
GX	125	(SJ 125)	2003	2003	289				
GZ	125	W/X/Y/K1-K9 "Marauder"	1998	2010	030				
RG	125	CG/CH/J (NF12A) Gamma / Rear Drum Brake model	1986	1990	074				
RG	125	FN/FP/FR (NF13A) Gamma / Rear Disc Model	1992	1994	032			065	
RG	125	FUN/FUP/FUR (NF13B) Gamma / Rear Disc Model	1992	1994	032			065	
RG	125	UCG/UCH/UJ/UAJ/BUJ (NF12B) Gamma / Rear Drum model	1986	1990	074				
RG	125	UN "Wolf" (ND13E) Naked	1992	1994	013			065	
RM	125	/ 250 F/G	1985	1986	030				
RM	125	H	1987	1987	002				
RM	125	J	1988	1988	002			007	
RM	125	K/L/M	1989	1991	002			001	
RM	125	K5-K9	2005	2012	041			003	
RM	125	N/P/R/S	1992	1995	002			100	
RM	125	T/V/W/X/Y/K1-K4	1996	2004	041			003	
RM	125	XCK8	2009	2009	041			003	
RV	125	K2/K3/K4/K5/K6/K7/K8/K9/L0/L3/L4/L5/ L6/L7/L8 Van-Van	2002	2018	124				
TS	125	RK/RL/RM/RN/RP/RR	1990	1996	002			001	
TS	125	XUF/UXG/XUH/XUJ	1985	1990	144				
TU	125	X/XTUX/XTX	1999	1999	005				
UC	125	X/Y Epicuro	1999	2002	109				
UE	125	CTK1	2001	2003	047				
UH	125	AL4/AL5/AL6/AL7/AL8 Burgman (ABS)	2014	2018	332			373	
UH	125	K2/K3/K4/K5/K6 Burgman	2002	2006	031			152	
UH	125	K7/K8/K9/L0/L1/L3 Burgman	2007	2013	257			373	
UH	125	L4/L5/L6 Burgman (Non ABS)	2014	2016	332			373	
UX	125	K8/K9/L0/L1 SIXteen	2008	2014	257			182	
UZ	125	K5/GK5 (CF46A) (V126G)	2005	2005	109				
VL	125	Y/K1/K2/K3/K4/K5/K6/K7/K8 Intruder	2000	2008	030				
X4	125				005				
GS	150	R South Africa	2015	2015	351				
GSX	150	Gixxer (DZAL6/DEAL8/DZAL8/DXAL8)	2016	2020	381				
GSX	150	Gixxer L6	2016	2020	381				
GSX-R	150	FRFAL7/FRZAL7	2017	2020	381			311	
GSX-R	150	RFL8/RFXL8/RFXL9	2018	2020	381			311	
GSX-R	150	RF-Q/RFX-Q	2017	2020	381			311	

Type	ccm		from	to	FL	FR	RL	RR	P
GSX-S	150	MFL8/MFXL8/MFXL9	2018	2020	381			311	
UE	150	CTK1	2001	2001	047				
UX	150	K8/K9/L0/L1 SIXteen	2008	2014	257			182	
DF	200	EV/EW/EY (SH42A)	1998	2000	144				
DR	200	G/H/J	1986	1989	144				
DR	200	SE Trojan	1996	2013	144				
DR	200	SEK1-SEK9	2001	2009	144				
DR	200	SEP/SER/SES/SEV/SEW/SEX/SEY Djebel (SH42A)	1993	2000	144				
RV	200	K2/K3	2002	2003	124				
RV	200	L6/L7/L8/L9 Van-Van	2016	2019	124				
SX	200	R/R2/RJ/RM	1990	1991	144				
TS	200	RK/RL/RM/RN/RP/RR	1989	1994	002			001	
UH	200	AL4/AL5/AL6/AL7/AL8/AL9 Burgman (ABS)	2014	2020	332			373	
UH	200	K7/K8/K9/L0/L1/L3 Burgman	2007	2013		257		373	
UH	200	L4/L5/L6 Burgman (Non ABS)	2014	2016	332			373	
LT	230	EH-EP	1986	1993	085	085		007	
LT	230	SF-SJ	1985	1988	091	091		077	
AN	250	8 Skywave SS (CJ46A)	2008	2008	334	332		265	
AN	250	K1/K2 Burgman/Skywave	2001	2002	147			267	
AN	250	K3-K6 Burgman (CJ43A)	2003	2006	147				
AN	250	Skywave Type M (BA-CJ45SA)	2007	2008	334	332		265	
AN	250	Skywave Type S (BA-CJ44A)	2007	2008	334	332		265	
AN	250	W/X/Y Burgman/Skywave	1998	2000	147			102	
DL	250	V- Strom AL8/AL9 (ABS)	2018	2020	014			306	
DR	250	RS/RLS/RT/RV/RLV/RLW/RW/RY (SJ45A/ DOHC)	1995	2000	041			001	
DR	250	RXT/RXLT/RXV/RXLV/RXW/RXLW/ RXGW/RXGLW/RXY/RXGY (Dejbel 250 XC/GPS Ver (SJ45A)			041			001	
DR	250	SL/SM/SN/SEP/SER/SES (SJ44A)	1990	1995	002			001	
DR-Z	250	K1-K7 (DJ43A)	2001	2007	041			100	
GN	250	F/J/M/R/T	1985	1997	075				
GS	250	TT/TX	1980	1981	075				
GSF	250	N/Z/M/P/NP/ZP/N/NR	1992	1996	013			016	
GSF	250	VS/VT/VV/VVZ/VW/VX/VY Bandit (GJ77)	1995	2000	104			016	
GSX	250	ET/EX/EZ	1980	1982	075				
GSX	250	FL/FM/FN/FP/FR/FS/FT/FV/FW Across	1990	1998	013			016	
GSX	250	FXK2/K3/K4/K5 (ZR 250C)	2002	2005	124			005	
GSX	250	R CH/H (GJ72A)			085	085		016	
GSX	250	RL7/RL8	2017	2018	014			306	
GSX	250	SSM Katana (GJ76A)	1991	1991	013			016	
GSXR	250	CK			085	085		016	
GSXR	250	J (GJ72A)			085	085		016	
GSXR	250	RK (GJ73A)	1989	1989	032	032		016	
GW	250	FL5 Inazuma	2015	2015	022			306	
GW	250	L3 Inazuma	2013	2013	027			306	
GW	250	ZL5 Inazuma	2015	2015	022				
GZ	250	K2-K8 Marauder	2002	2008	030				
GZ	250	X/Y/K1	1999	2001	030				
LT	250	RF-RH	1985	1987	091	091		077	
LT	250	RH/RJ/RK/RL	1987	1990	091	091		092	
LT	250	SK, SL	1989	1990	091	091		007	
LT-F	250	K2/K3/K4/K5/K6/K7/K8/K9/L2/L3/L4 Ozark	2002	2014	144	144			
LT-Z	250	K4/K5/K6/K7/K8/K9K/L0 Quadsport	2004	2012	007	007			
RG	250	WD "Gamma"	1983	1983	016			016	
RG	250	WE/FG/CH/FCH/FH Gamma	1984	1988	172	172		016	
RGV	250	J/K/L	1988	1990	032	032		016	
RGV	250	M/N/P/R/S	1991	1995	032	032		044	
RGV	250	T (RGVR 250SP VJ 23A)	1996	1996	090	090		044	
RM	250	H/J	1987	1988	002			007	
RM	250	K/L	1989	1990	002				
RM	250	K5/K6/K7/K8	2005	2008	041			003	
RM	250	N/P/R/S	1992	1995	002			100	
RM	250	T/V/W/X/K1-K9	1996	2012	041			003	
RM	250	XCK8	2009	2009	041			003	
RMX	250	K/M/N/P	1989	1993	002			001	
RMX	250	R/S	1994	1995	002			100	
RMX	250	SN/SR/SS (SJ13A)	1995	1997	002	002		100	
RMX	250	ST/SV/SW/SX (SJ14A)	1996	1999	041			003	
RMX	250	T/V/W	1996	1998	041			001	
RM-Z	250	K4/K5/K6	2004	2006	041			187	
RM-Z	250	K7/K8/K9	2007	2009	041			187	
RM-Z	250	L0/L1/L2/L3/L4/L5/L6/L7/L8/L9	2010	2020	041			187	
RM-Z	250	With Goldfren motocross caliper	2007		041			187	
SBK2	250	(LX 250 L)	2002	2002	041			003	
SW-1	250	(NJ45A)	1992	1992	013				
TS	250	XE/XG/XH/XJ/XK	1985	1989	144				
TU	250	GY/GBK1 Grass Tracker / Big Boy (NJ47A-117/123)	2000	2001	104				
TU	250	S/T/XS/XT/X-ST/XSV/XT-W (NJ47A 10001-115972)	1992	1997	030				
TU	250	XTX/XTY (NJ47-115) Volty	1999	2000	104				
TU	250	XV/XW	1997	2000	030				
TV	250	J (VJ21A) Wolf	1988	1988	032			016	
TV	250	K/AK/L (VJ21A) Wolf	1989	1990	032			016	
VL	250	K5/K6/K7 Intruder	2005	2007	030				

Type	ccm		from	to	FL	FR	RL	RR	P
VL	250	Y/K1 Intruder	2000	2001	030				
LT-F	300	FK2	2002	2002	009	002		009	
DR	350	S, SH, SL, SM, SN, SP, SR, SE (SK42B/F418)	1990	1996	002				
DR	350	SER/SES (Electric Start / 4 Bolt Front Disc)	1994	1995	002			001	
DR	350	SET/SEV (Electric Start / 4 Bolt Front Disc)	1996	1997	002			001	
DR	350	SEW/SEX (Electric Start / 6 bolt Front Disc)	1998	1999	041			001	
DR	350	SL/SM/SN/SP (4 bolt front disc / kick start)	1990	1993	002			001	
DR	350	V, W, X	1997	1997	041			100	
SG	350	N "Goose"	1992	1992	032			016	
AN	400	AK9/ZAK9/AL0/ZAL0/AL1/ZAL1/AL2/AL3/AL4/ZAL4/AL5/ZAL5/AL6/ZAL6/AL7/ZAL7/AL8/ZAL8/AL9/ZAL9 Skywave/Burgman/ABS	2009	2020	334	332		265	
AN	400	K1-K2 Burgman/Skywave	2001	2002	147			267	
AN	400	K3-K6 Burgman/Skywave	2003	2006	147			267	
AN	400	K7/ZK7/K8/ZK8/K9/L0/L1/L2/L3/L4 Burgman/Non ABS/Skywave	2007	2015	334	332		265	
AN	400	X/Y Burgman/Skywave	1999	2000	147			102	
DR-Z	400	SEY/EY/Y/SEK1/EK1/K2/SEK2/EK2/K3/SEK3/EK3/K4/SEK4/EK4/EK5/SK5/SK6/K6/SK7/K7/EK7/SK8/SK9	2000	2009	041			003	
DR-Z	400	SMK5/SMK6/SMK7/SMK8/SMK9	2005	2009	041			003	
GN	400	TT	1980	1980	075				
GSF	400	All models (Bandit)	1989	1997				016	
GSF	400	Bandit (GK75B/F610)	1994	1996	104	124			
GSF	400	K/NK/Z/VM/VZM/P/NP/VP/VZP/VR (GK75A) "Bandit"	1989	1994	032	032			
GSF	400	M/N/P Bandit	1991	1995	013				
GSF	400	S/VS/V-V/VZ-V Bandit (GK7AA)	1995	1997	032	032			
GSR	400	K6/K7/K8	2006	2008	032	032		241	
GSX	400	ET/EX/EZ	1981	1983	075				
GSX	400	F FJ/FK/FAK/FL (GK74A)	1988	1990	027	027		016	
GSX	400	FD	1983	1983	005			076	
GSX	400	FSV/FSK1 (GK7B) Inazuma	2000	2000	141			016	
GSX	400	FW/FWS/FWS-2	1983	1983	016	016		016	
GSX	400	FX/FZ	1981	1982	005			076	
GSX	400	LX/TX	1981	1981	075				
GSX	400	R/S/T/ZR/ZS/ZT "Impulse Type"	1994	1996	022			016	
GSX	400	R2/RG (GK71B/F)	1985	1986	172	172	016		
GSX	400	R3 (GK71F)			085	085			
GSX	400	SSN (GK77A) Katana	1992	1992	032	032		016	
GSX	400	X Impulse	1999	1999	141				
GSX	400	X/XA/XS Impulse			085	085		016	
GSX-R	400	H	1987	1987	085	085	016		
GSX-R	400	J/RR/RAK (GK73A)	1988	1990	032	032		016	
GSX-R	400	K6/K7/K8	2006	2008	032	032			
GSX-R	400	RL/RM/RN/RP/RS (GK76A)	1990	1995	017	017	016		
LT-A	400	FK2/FK3/FK4/FK5/FK6/FK7 Eiger 4WD	2002	2007	144	144			
LT-A	400	FK8/FK9/FL0/FL1 King Quad Auto 4WD	2008	2012	373	374			
LT-F	400	FK2/FK3/FK4/FK5/FK6/FK7 (Eiger 4WD)	2002	2007	144	144			
LT-F	400	FK8/FK9/FL0/FL1 King Quad 4WD	2008	2012	373	374			
LT-F	400	K2-K7	2002	2007	144	144			
LT-Z	400	K3/K4/K5/K6/K7/K8/K9/L0	2003	2010	007	007		092	
LT-Z	400	L1	2011	2012				092	
LT-Z	400	L1/L2/L3	2011	2015	007	007			
RF	400	RP/RR/VR/RT/RVT/RV-V (GK78A)	1993	1997	022			016	
RG	400				085	085			
RG	400	EWF/EW-2G/EWH Walter Wolf (Type 1&2)	1985	1987	085	085		016	
SV	400	K3/K4/K5	2003	2005	104	124		021	
SV	400	N (VK53A)	1998	1998	124			016	
SV	400	SK3/SK4/SK5	2003	2005	104	124		021	
SV	400	SV (VK53A)	1998	1998	124			016	
SV	400	SX/SY/SK1/SK2	2000	2002	104	124		016	
SV	400	X/Y/K1/K2	2000	2002	104	124		016	
VS	400	VR/FR/VTR/FTR/V-T/F-T	1994	1994	085	085			
GS	450	ET/EG/EJ	1980	1988	075				
LT-A	450	XK7/XK8/XK9 King Quad	2007	2010	373	374			
LT-R	450	K6/K7/K8/K9/L0/L1/L2/L3	2006	2013	009	002		092	
RMX	450	ZL0/ZL2	2010	2015	041			187	
RM-Z	450		2020	2020	041			187	
RM-Z	450	K5/K6/K7	2005	2007	041			187	
RM-Z	450	K8/K9/L0/L1/L2/L3/L4/L5/L6/L7	2008	2017	041			187	
RM-Z	450	L8/L9	2018	2020	041			187	
GS	500	EK/EL/EM/EN/EP/ER/ES	1989	1995	013			016	
GS	500	ET/EV/EW/EX/EY/K1/K2/K3/FK4/FK5/K5/FK6/K6/K7/FK7/K8/FK8	1996	2008	124			016	
LT	500	RL	1990	1990	091	091		092	
LT-A	500	FK2 Vision 4WD	2002	2002	144	144		205	
LT-A	500	FK3/FK4 Vinson 4WD Auto	2003	2007	144	144			
LT-A	500	FY/FK1 Quadmaster	2000	2001	009	002			
LT-A	500	King Quad	2011	2011	182	205			
LT-A	500	XPK9/XPZK9/XPL0-XPL5 King Quad (Power Steering)	2009	2015	373	374			
LT-F	500	FK3/FK4/FK5/FK6/FK7 Vinson	2003	2007	144	144			
LT-F	500	FW/FX/FY/FK1/FK2	1998	2002	009	002			
RG	500	G/CH	1985	1987	085	085		016	
GS	550	EC/EN	1978	1979				076	

Type	ccm		from	to	FL	FR	RL	RR	P
GS	550	ET/EX/EZ/LT/LX/MX/MZ	1980	1984	138	138		076	
GSX	550	ESD/ESE/EFE/EFF/ESH/EFG	1984	1987	016	016		016	
DR	600	RG/RH/RJ (SN41A) (Rear Drum Model)	1986	1988	046				
DR	600	RK (SN41A) (Rear disc model)	1989	1989	046			065	
DR	600	SF/SG/SH/SJ/SK (SN41A)	1985	1989	046				
GSF	600	N, S Bandit (GN77B/H008)	1995	1999	022	022		016	
GSF	600	SY/SK1/SK2/SK3/SK4 (Faired Bandit)	2000	2004	104	124		016	
GSF	600	Y/K1/K2/K3/K4 (Naked Bandit)	2000	2004	104	124		016	
GSR	600	K6/K7/K8	2006	2010	032	032		241	
GSX	600	FJ/FK/FL/FM/FN/FP/FR/FS/FT/FV	1988	1997	027	027		016	
GSX	600	FW/FX/FY/FK1/FK2/FK3/FK4/FK5/FK6	1998	2006	104	124		016	
GSX-R	600	K1/K2/K3/ZK3	2001	2003	032	032		016	
GSX-R	600	K4/K5	2004	2005	213	213		148	
GSX-R	600	K6/K7	2006	2007	213	213		241	
GSX-R	600	K8/K9/L0	2008	2010	213	213		241	
GSX-R	600	L1/L2/L3/L4/L5/L6/L7/L8	2011	2018	258	258		242	
GSX-R	600	V/W/X/Y	1997	2000	032	032		016	
RF	600	RP/RR/RS/RT/RV	1993	1997	022	022		016	
VS	600	GL Intruder (VN51B/G973)	1997	2005	085				
VS	600	GLS/GLT/GLV	1995	1997	085	085			
AN	650	AK4/AK5/AK6/AK7/AK8/AZK8/AK9/AL0 Burgman / ABS	2004	2012	022	022		265	
AN	650	K3/K4/K5/K6/K7/K8/K9/L0 Burgman (Non ABS)	2004	2011	022	022		265	
AN	650	L3/L4/L5/L6 Burgman (Non ABS)	2013	2016	022	022		265	
AN	650	ZL3/ZL4/ZL5/ZL6/ZL7/ZL8 Burgman ABS Executive	2013	2018	022	022		265	
DL	650	AK7/AK8/AK9/AL0 V-Strom ABS	2007	2011	104	124		021	
DL	650	AK9 GT V-Storm Traveller ABS	2009	2011	104	124		021	
DL	650	AL1 XP V-Strom Expedition	2011	2011	104	124		021	
DL	650	AL2/AL3/AL4/AL5/AL6/AL7/AL8/AL9 V-Strom ABS	2012	2020	104	124		021	
DL	650	K4/K5/K6 V-Strom	2004	2006	104	124		021	
DL	650	XK7/XK8/XK9/XL0 V-Strom X	2007	2011	104	124		021	
DL	650	XT XAL5/XAL6/XAL7/XAL8/XAL9 V-Strom ABS	2015	2020	104	124		021	
DR	650	RER/RES (SP45A/B)	1994	1995	036			065	
DR	650	RL/RM (SP41A)	1990	1991	036			065	
DR	650	RSEM/RSEN/RSEP (SP43A/B)	1991	1993	036			065	
DR	650	RSL/RSM (SP42A)	1990	1991	036			065	
DR	650	RUN/RN/RUP/RP (SP44A/B)	1992	1993	036			065	
DR	650	SET/SEV	1996	1997	041			001	
GR	650	D/XD Tempter	1983	1983	138	138			
GS	650	GTX/GTZ/GTD/GX/GZ	1981	1983	138	138		076	
GSF	650	AK5/AK6 Naked Bandit - ABS	2005	2006	104	124		021	
GSF	650	AK7/AK8/AK9/AK0/AL1/AL2 Naked Bandit ABS	2007	2012	032	032		021	
GSF	650	K5/K6 Naked Bandit Non ABS	2005	2006	104	124		148	
GSF	650	K6/SAK6/K7/SAK7(Bandit ABS)	2007	2007	032	032		021	
GSF	650	K7/K8/K9/L0/L1/L2 Naked Bandit / Non ABS	2007	2012	032	032		021	
GSF	650	S/T/V/W/X Naked Bandit	1995	1999	022			016	
GSF	650	SAK5/SAK6 Faired Bandit ABS	2005	2006	104	124		021	
GSF	650	SAK7/SAK8/SAK9/SAL0/SAL1/SAL2 Faired Bandit ABS	2007	2015	032	032		021	
GSF	650	SK5/SK6 Faired Bandit Non ABS	2005	2006	104	124		148	
GSX	650	FAK8/FAK9/FAL0/FAL1/FAL2 (ABS Model)	2008	2015	032	032		021	
GSX	650	FK8/FK9/FL0/FL1/FL2	2008	2012	032	032		021	
GSX	650	SK7/SK8/SK9 Faired Bandit / Non ABS	2007	2009	032	032		021	
GSX	650	ST/SV/SW/SX Faired Bandit	1995	1999	022			016	
LS	650	"Savage" FG/PK/PM/PR/PG/PT/PV/PW/PX	1987	1999	030				
LS	650	P Savage	1995	2004	030				
SFV	650	AK9/AL0/AL1/AL2/AL3/AL4/AL5 (ABS)	2009	2015	104	124		306	
SFV	650	K9/L0/L1/L2/L3/L4/L5 Gladius	2009	2015	104	124		306	
SV	650	AK7/AK8/AK9/AL0 Naked - ABS	2007	2010	104	124		021	
SV	650	AL7/AL8/AL9 (ABS)	2016	2020	104	124		306	
SV	650	K3/K4/K5/K6/K7/K8/K9/L0 Naked - Non ABS	2003	2010	104	124		021	
SV	650	SAK7/SAK8/SAK9/SAL0	2007	2015	104	124		021	
SV	650	SK3/SK4/SK5/SK6/SK7/SK8/SK9/SL0 Top Fairing - Non ABS	2003	2015	104	124		021	
SV	650	SX/SY/SK1/SK2 Top Fairing Non ABS	1999	2002	104	124		016	
SV	650	X AL8/AL9 (ABS)	2018	2020	104	124		306	
SV	650	X/Y/K1/K2 Naked - Non ABS	1999	2002	104	124		016	
XF	650	V/W/X/Y Freewind (AC/H674)	1997	2002	124			020	
GS	700	EF/ESF	1985	1985	075	075		076	
LT-A	700	King Quad	2005	2005	182	205			
LT-A	700	XK5/XCK6/XK6/XK7 King Quad	2005	2007	373	374			
LT-V	700	FK4/FK5 Twin Peaks	2004	2005	245	108			
VS	700	GLEFG/GLEPG/GLEFH/GLEPH	1986	1987	085	085			
VS	700	GLFG	1986	1991	085			085	
DR	750	SJ	1988	1989	036				
DR	750	SK	1989	1989	036			065	
GS	750	B/DB/DC/EC/EN	1977	1980				076	
GS	750	L, N, LN (GS750/-)		1979				076	
GS	750	RF	1985	1985	085	085		016	
GS	750	SD	1984	1983	138	138		076	

Type	ccm		from	to	FL	FR	RL	RR	P
GSR	750	AL2/AL3/AL4/AL5 (ABS)	2011	2015	104	124		021	
GSR	750	L1/L2/L3/L4/L5/L6 (Non ABS)	2011	2016	104	124		021	
GSX	750	ES (GR72A/D037)	1983	1985	075	075		076	
GSX	750	ES (GR72A/D787)	1984	1985	016	016		016	
GSX	750	ESD/EFE/ESG/ESE/ESH/EFF	1982	1986	075	075		076	
GSX	750	ET/EX	1980	1981	075	075		076	
GSX	750	FK/FL/FM/FN/FPFR/FS/FT/FV	1989	1997	027	027		016	
GSX	750	FW/FX/FY/FK1/FK2/FK3/FK4/FK5/FK6	1998	2006	104	124		016	
GSX	750	L (GS75X/B895/1/2)	1980	1982	075	075		076	
GSX	750	S/SS (G57SX-106815-) Katana	1984	1984	138	138		076	
GSX	750	S-2/S-2C (GS75X-114747-) Katana	1984	1984	138	138		076	
GSX	750	SE "Katana"	1985	1985	016	016		076	
GSX	750	W/X/Y/K1	1998	2002	104	124		016	
GSXR	750	RG	1986	1986	017	017		016	
GSX-R	750	F/G/H	1985	1987	085	085		016	
GSX-R	750	J/K/L/M	1988	1991	017	017		016	
GSX-R	750	K4/K5	2004	2005	213	213		148	
GSX-R	750	K6/K7	2006	2007	213	213		241	
GSX-R	750	K8/K9/L0	2008	2010	213	213		241	
GSX-R	750	L1/L2/L3/L4/L5/L6/L7/L8/L9	2011	2020	258	258		242	
GSX-R	750	R	1990	1991	017	017		016	
GSX-R	750	T/V/W/X	1996	1999	039	039		016	
GSX-R	750	WN/WP	1992	1993	017	017		016	
GSX-R	750	WR/WS	1994	1995	039	039		016	
GSX-R	750	Y/K1/K2/K3	2000	2003	032	032		016	
GSX-S	750	AL7/AZL7/AL8/AZL8/AL9/AZL9	2017	2020	207	207		021	
LT-A	750	XPK9/XPZK9/XPL0-XPL5 King Quad (Power Steering)	2009	2015	373	374			
LT-A	750	XZK8/XK8/XK9/XZK9/XL0 King Quad	2008	2010	373	374			
VS	750	All Models	1985	1991	085	085			
C	800	(VL 800 K6/K7/K8/K9/L0/L1/L2/L3/L5) Intruder (Spoke Wheel Model)	2006	2015	124				
C	800	C (VL 800 CK7/CK8/CK9/CL0/CL1/CL2/CL3) Intruder (Cast Wheel Model)	2007	2015	124				
DR	800	SL	1990	1990	036			065	
DR	800	SM/SN/SP/SR/SS (SR43B)	1991	1995	013			088	
DR	800	ST/SV (SR43B)	1996	1997	104				
M	800	Z (VZ 800 K5-K9/K9Z/L0/L1/L3) Intruder	2005	2013	124				
M	800	Z (VZ 800 K9Z Intruder)	2009	2010	124				
VL	800	BTL4 C800 Intruder	2014	2014	124				
VL	800	K1/K2/K3/K4/K5 "Intruder Volusia"	2001	2005	124				
VS	800	GLN/GLP/GLR/GLT/GLS/GLV/GLW/GLX	1992	1999	085				
VX	800	L/M/N/P/R/T	1990	1996	013			027	
VX	800	T	1996	1996	104				
VZ	800	L4/L5 Intruder M800/T	2014	2015		124			
VZ	800	Marauder (AF/H584)	1997	2003	124				
GS	850	G, GT, GX, GLX	1980	1988	075	075		076	
GS	850	GL, GLT	1981	1983	075	075		076	
GS	850	GN/GT/GX	1979	1982				076	
GS	850	GZ/GE/GG	1982	1985	075	075		076	
XN	850	Turbo	1983	1983	138	138		076	
DL	900	Migrator	2014	2019	104			021	
RF	900	RR/RS/RS2	1994	1995	017	017		129	
RF	900	RT/RV/RW	1996	1998	017	017		016	
DL	1000	AL4/AL5/AL6/AL7/AL8/AL9 V-Strom (ABS)	2014	2020	213	213		241	
DL	1000	K2/K3/K4/K5/K6/K7/K8/K9/L0 V-Strom	2002	2010	104	124		021	
DL	1000	V-Strom ABS Adventure AL2	2012	2013	104	124		021	
DL	1000	XT V-Strom (XAL8/XAL9) (ABS)	2018	2020	213	213		241	
GS	1000	ET	1981	1981	138	138		076	
GS	1000	GT/GX	1981	1982	075	075		076	
GS	1000	HC/EC/EN/SN	1978	1980				076	
GSX	1000	Katana	2019	2020	258	258		021	
GSX	1000	SZ Katana	1982	1982	138	138		076	
GSX-R	1000	A (Brembo Caliper / 320mm Disc ABS)	2017	2020	258	258		242	
GSX-R	1000	AL5/AL6 (Brembo Caliper / 310mm Disc ABS)	2015	2016	258	258		242	
GSX-R	1000	K1/K2	2001	2002	039	039		148	
GSX-R	1000	K3	2003	2003	200	200		148	
GSX-R	1000	K4	2004	2004	213	213		148	
GSX-R	1000	K5/K6	2005	2006	213	213		148	
GSX-R	1000	K7/K8	2007	2008	213	213		241	
GSX-R	1000	K9/L0/L1	2009	2011	213	213		242	
GSX-R	1000	L2/L3/ZL3/L4/ZL4/L5/L6/L7 (Brembo Caliper)	2012	2017	258	258		242	
GSX-R	1000	R (Brembo Caliper/320mm Disc ABS)	2017	2020	258	258		242	
GSX-S	1000	AL6/AL7/AL8/AL9 (Naked/ABS)	2016	2020	258	258		021	
GSX-S	1000	FAL6/FAL7/FAL8/FAL9 (Faired/ABS)	2016	2020	258	258		021	
GSX-S	1000	FL6/FL7/FL8/FL9 (Faired/Non ABS)	2016	2020	258	258		021	
GSX-S	1000	L6/L7/L8/L9 (Naked/Non ABS)	2016	2020	258	258		021	
SV	1000	K3/K4/K5/K6/K7	2003	2007	032	032		021	
SV	1000	SK3/SK4/SK5/SK6/SK7 Faired Model	2003	2007	032	032		021	
TL	1000	RW/RX/RY/RK1	1998	2002	039	039			
TL	1000	SV/SW/SX/SY/SK1	1997	2001	032	032		016	
GS	1100	GZ	1982	1982	075	075		076	
GSX	1100	EFE/EFF/ESF	1984	1986	085	085		085	
GSX	1100	ET/EX/EZ/ESD	1980	1983	138	138		076	
GSX	1100	FJ/FK/FL/FM/FN/FP/FR (GV72A)	1988	1994	027	027		085	

Type	ccm		from	to	FL	FR	RL	RR	P
GSX	1100	G (GV74A/F725)	1996	1996	104	124		016	
GSX	1100	GM/GN/GP (GV74A/F725)	1991	1994	013	013		027	
GSX	1100	SZ/SD Katana	1982	1983	138	138		076	
GSX-R	1100	G/H/J	1986	1988	085	085		016	
GSX-R	1100	K/L/M/N (GV73C/F024)	1989	1992	017	017		016	
GSX-R	1100	WP/WR/WS/WT	1993	1996	039	039		016	
GSF	1200	AK6/SAK6	2006	2006	032	032		021	
GSF	1200	K3/SK3/K4/SK4/K5/SK5 "Bandit"	2003	2005	039	039		016	
GSF	1200	SAV ABS Bandit	1997	1997	017	017		016	
GSF	1200	SK1/K1/SK2/K2 Bandit	2001	2002	039	039		016	
GSF	1200	SK1/SK2/SK3/SK4/SK5 (Faired Bandit - 6 piston caliper)	2001	2005	039	039		016	
GSF	1200	SK6/SAK6 ABS & Non ABS Faired Bandit 4 Piston Caliper	2006	2006	032	032		021	
GSF	1200	SK7/SK8/SK9/SL0 Faired Bandit - Non ABS 4 Piston Caliper	2007	2010	032	032		021	
GSF	1200	SSK1/ZK1 (GV78A)	2002	2002	039	039		148	
GSF	1200	ST/SV/SW/SX/SY (Faired Bandit) 4 Piston Caliper	1996	2000	017	017		016	
GSF	1200	T/ST/V/SV/S/SW/X/SX/SY/SK1/K1/K2/SK2/K3/SK3/K4/SK4/K5/SK5 "Bandit"	1996	2005	017	017		016	
GSF	1200	T/V/W/X/Y (Naked Bandit) 4 Piston Caliper	1996	2000	017	017		016	
GSX	1200	FSW/FSX Inazuma	1998	1999	141	141		016	
GV	1200	GLF/GLF2/GLG Madura	1985	1986	075	075		076	
GSF	1250	AK7/AK8 ABS Model Naked Bandit 4 Piston Caliper	2007	2008	032	032		021	
GSF	1250	AK7/AK8/AK9 (Bandit ABS)	2007	2016	032	032		021	
GSF	1250	K6/AK6 ABS & Non ABS Naked Bandit 4 Piston Caliper	2006	2006	032	032		021	
GSF	1250	K7/K8/K9/0L0 Non ABS Naked Bandit 4 Piston Caliper	2007	2011	032	032		021	
GSF	1250	SAK7/SAK8/SAK9/SAZK9/SAL0/SAL1/SAL2/SAL4/SAL5/SAL6 Faired Bandit (4 Piston Caliper) (ABS)	2007	2016	032	032		021	
GSF	1250	SK6/SAK6 ABS & Non ABS Faired Bandit 4 Piston Caliper	2006	2006	032	032		021	
GSF	1250	SK7/SK8/SK9/SL0 Faired Band Non ABS 4 Piston Caliper	2007	2010	032	032		021	
GSX	1250	FAL0/FAL1/FAL2/FAL4/FAL5/FAL6	2010	2016	032	032		021	
GSX	1250	FAL0ST/FAL1ST Sports Tourer	2010	2014	032	032		021	
GSX	1300	B-King (BKK8/BKK9/BKL0/BKL1)	2008	2012	207	207		241	
GSX-R	1300	Hayabusa (Brembo Calipers)	2013	2020	258	258		241	
GSX-R	1300	RK8/RK9/RL0/RL1/RL2 Hayabusa	2008	2012	213	213		241	
GSX-R	1300	RX/RY/RK1/RK2/RZK3/RK3/RK4/RK5/K6/K7 Hayabusa	1999	2007	039	039		016	
GSX	1400	K1/K2/K3/K4/K5/K6/K7/FE	2001	2007	039	039		148	
GV	1400	GDG/GCG/GDH/GDJ "Cavalcade"	1986	1988	027	027			
GV	1400	GDG/GTG Cavalcade (Up to F/No 103764)	1986	1986	085	085		085	
VS	1400	GLPH/GLFH/GLPJ/GLFJ/GLPR/GLPT/GLPV/GLPW/GLPX/GLPY/GLPK1/GLPK2 Intruder	1987	2003	085	085		085	
M	1500	(VZ 1500 K9/L0/L1 Intruder)	2009	2013	104	124		124	
VL	1500	BTL3/BTL4/BTL5 (CT 1500 BT Intruder)	2013	2015	014			124	
VL	1500	K2/K3 Intruder	2002	2003	104	124		206	
VL	1500	K5/K6/K7/K8 (C1500) Intruder	2005	2008	104	124		206	
VL	1500	W/X/Y/K1	1998	2001	085	085		085	
M	1600	(VZ 1600 K4 Intruder)	2004	2004	039	039		124	
M	1600	(VZ 1600 K5 Intruder)	2005	2005	200	200		124	
C	1800	R (VLR 1800 K8/K9/L0/L1) Intruder	2008	2013	257	257		124	
C	1800	RT (VLR 1800 K8RT/K9RT) Touring Intruder	2008	2009	257	257		124	
M	1800	R (VZR 1800 K6/K7/K8/K9) Intruder - Handlebar Cowling	2006	2009	213	213		124	
M	1800	R2 (VZR 1800 NK8/NK9) Intruder - No Handlebar Cowling	2008	2009	213	213		124	
M	1800	RZ (VZR 1800 ZK7/ZK8/ZL1/ZL2) Intruder - with handlebar cowling	2007	2013	213	213		124	
VLR	1800	RK8 (C1800R/C109R Intruder)	2008	2010	257	257		124	
VZ	1800	K6	2006	2006	200	200		124	
VZR	1800	BZL4/BZL5/BLZ6/BLZ7/BLZ8 - M1800 RB	2014	2018	213	213			
VZR	1800	K6/K7/K8 (M1800 R Intruder)	2006	2009	213	213			
VZR	1800	RZK8 Intruder M1800 R2/M109 R2	2008	2009	213	213			
		SWM							
MC	125	R	2018	2018	031			191	
RS	125	R	2016	2017	031			023	
RS	125	R	2018	2018				402	
SM	125	R	2016	2017	031			023	
SM	125	R	2018	2020				402	
	125	GP	1986	1986	038	038		038	
MC	250	S	2016	2016	031			191	
	250	Explorer	1986	1986	038			038	
FT	300	R (RS 300 R Flat Track)	2017	2017	031			191	
RS	300	R (4T)	2015	2018	031			191	
RS	340	S	2016	2016	031			191	
	440	Gran Milano (4T)	2015	2015	022				
	440	Gran Milano (4T)	2016	2018	177			402	
	440	Gran Milano Boggi SE	2018	2018	177			402	
	440	Gran Milano Special (4T)	2015	2015				023	
	440	Gran Tourismo (4T)	2015	2015	022				
	440	Gran Turismo	2018	2018				402	
	440	Silver Vase (4T)	2015	2015	022				
	440	Silver Vase (4T)	2018	2018				402	
	440	Six Days	2018	2020				402	
SM	450	R (4T)	2015	2018	177			191	

Type	ccm		from	to	FL	FR	RL	RR	P
RS	500	R (4T)	2015	2018	031			191	
SM	500	R	2016	2020	177			191	
	500	Ace of Spades	2018	2020	177			402	
	500	Gran Milano Outlaw	2018	2020	177			402	
	600	Super Dual T	2016	2020	106			023	
	600	Super Dual X	2016	2020	106			023	
MC	650	R	2018	2018	185			297	
RS	650	R	2016	2018	031			023	
SM	650	R	2016	2018	177			023	
		SYM							
DD	50	(2T)	2002	2012	161				
DD	50	City Trek	2002	2008	161				
RS	50		2004	2009	234				
SR	50	Jet Sport X	2006	2015	174			131	
TS	50	Orbit II (4T)	2012	2013	332				
WK	50	GTR (2T)	2010	2010				137	
	50	Allo (4T)	2011	2015	174				
	50	Allo GT (4T)	2013	2015	174				
	50	Bullet	1993	1993	161				
	50	Cinderella	1999	2000	161				
	50	City Hopper	1999	2002	110				
	50	Crox (4T)	2015	2015	174				
	50	Fiddle II	2008	2015	174				
	50	Fiddle III (4T)	2014	2015	174				
	50	Jet	1999	2005	174				
	50	Jet 4 (4T)	2010	2015	174				
	50	Jet 4 R Naked (50/4T)	2013	2015	174				
	50	Jet 4 R50 (2T)	2011	2015	174				
	50	Jet Euro X	2005	2014	174				
	50	Jet Evo (2T)	2013	2015	174				
	50	Jet Sport	2014	2015	174				
	50	Jet Sport S	2014	2015	174				
	50	Mask	2000	2005	174				
	50	Mio	2005	2020	161				
	50	Orbit	2008	2009	110				
	50	Orbit II Naked (4T)	2012	2013	332				
	50	Pure	1998	1998	161				
	50	Red Devil	1999	2009	174				
	50	Shark	1999	2003	234				
	50	Super Fancy	1996	2002	110				
	50	Symphony S (4T) Rear Disc Model	2010	2020	174			137	
	50	Symphony SR (4T/Rear Disc Model)	2010	2015	174			137	
	50	Symply	2007	2008	174				
	50	Symply 11	2009	2013	174				
	50	Tonik (4T)	2011	2015	161				
	50	X'Pro	2013	2015	174				
SR	100	Sunrise	1997	1997	071				
	100	Cinderella	1999	2000	161				
	100	Mio	2005	2015	161				
	110	E-Symmetry	2012	2013	161				
	110	E-Virid (Electric) Deluxe	2012	2015	161				
	110	Tonik (4T)	2011	2013	161				
4VR	125	Shark	2001	2002	234			332	
	125	Allo (4T)	2011	2015	174				
	125	Crox (4T)	2015	2015	174				
CT	125		2003	2004	237				
GTS	125	i Joymax (All models)	2010	2015	140			286	
GTS	125	i Sport (All models)	2014	2015	140			286	
GTS	125	Joymax/Voyager	2006	2009	286			286	
HD	125	/200	2004	2007	183				
HD	125	Evo (Carb & EFi Models / 4T / Single Headlamp)	2003	2013	174			286	
HD	125	S Evo	2007	2007	174				
HD2	125	i (4T)	2010	2015	174				
HD2	125	i (4T) (Twin Headlamps)	2010	2015	174			286	
MX	125	Euro (Rear Disc model) (HF12 W3-6 Euro 2)	2006	2009	234			332	
MX	125	Euro (Rear drum model) (HF12-W6 Euro 1)	2002	2007	234				
RS	125		2004	2006	234				
SB	125	N - Wolf (Carb Model/Drum Rear)	2011	2015	048				
SB	125	Ni-Wolf (EFi Model)	2011	2015	286			230	
SK	125		2003	2004	234			183	
VS	125		2006	2015	234				
XS	125	K	2007	2013	332				
	125	Cevalo B9A (4T)	2010	2010	014				
	125	City Com	2008	2013	174			286	
	125	Combiz	2011	2015	183				
	125	Fiddle II	2008	2015	174				
	125	Fiddle III (4T)	2014	2015	174				
	125	Huskey	1999	2005	237				
	125	Jet 4 (4T)	2010	2015	174				
	125	Jet V (4T)	2012	2013	005				
	125	Joyride	2001	2007	234			183	
	125	Joyride EVO i (Twin Headlamps)	2009	2020	234			286	
	125	Joyride i	2007	2009	234			286	
	125	Megalo	2000	2006	174				

Type	ccm		from	to	FL	FR	RL	RR	P
	125	Orbit	2008	2009	110				
	125	Shark	1999	2002	234				
	125	Symphony	2009	2015	174				
	125	Symphony S (4T) Rear Disc Model	2010	2020	174			137	
	125	Symphony SR (4T) Rear Disc Model	2010	2015	174			137	
	125	Symply	2007	2008	174				
	125	Tonik (4T)	2011	2014	161				
	125	Wolf Legend	2004	2005	011				
	125	X'Pro	2013	2015	174				
	125	X-Pro	2011	2013	334				
	150	Allo (4T)	2011	2015	174				
RS	150		2006	2006	234			334	
VS	150		2006	2015	234				
	150	Crox (4T)	2015	2015	174				
	150	Huskey	1999	2005	237				
	150	Jet 4	2013	2015	174				
	150	Joyride	2001	2006	234			183	
	150	Shark	1999	2002	234				
	151	Fiddle II	2008	2015	174				
	151	Symphony S (4T) Rear Disc Model	2010	2015	174			137	
	151	Symphony SR (4T) Rear Disc Model	2010	2015	174			137	
H	200	SE	2006	2006	174			286	
HD	200	Evo (Carb & EFi Models / 4T / Single Headlamp)	2003	2013	174			286	
HD	200	S Evo	2007	2007	174			286	
HD2	200	i (4T) (Twin Headlamps)	2010	2015	174			286	
	200	Joyride EVO i	2009	2020	234			286	
	200	Fiddle III (4T)	2014	2015	174			174	
	200	Joyride	2001	2007	234			183	
	200	Joyride i	2007	2009	234			286	
	200	Quadlander	2012	2013	230	230		286	
	200	Trackrunner Quad	2005	2009	230	230		286	
GTS	250		2007	2008	140			286	
GTS	250	i Joymax (All models)	2009	2015	140			286	
SB	250	Ni (Wolf SB)	2012	2015	331			230	
	250	i Joymax	2007	2008	140			286	
	250	Joymax	2006	2006	140				
	250	Quadlander	2005	2007	230	230		286	
	250	Voyager	2005	2005	140				
	250	Voymax	2006	2006	140				
GTS	300	i Sport (All models)	2014	2015	140			286	
GTS	300	Joymax (All Models)	2008	2015	140			286	
	300	City Com i	2008	2014	174			174	
	300	City Com S i (CBS)	2015	2015	174			174	
	300	Citymax Quad	2006	2006	230	230		286	
	300	Cruisym	2017	2020	140			286	
	300	Joymax Z ABS	2017	2020	140			286	
	300	Quadlander	2008	2010	230	230		230	
	300	Quadlander S	2007	2015	230	230		230	
	400	Max Sym 400i (Inc ABS)	2011	2020	331	331		360	
GT	500		2004	2004	147			183	
GT	500		2007	2007	147	147			
	600	Max Sym 600i (ABS)	2014	2015	331	331		360	
	600	Quadraider	2006	2007	144	144		230	
	600	Quadraider	2008	2015	230	230		230	
	600	Quadraider LE (Quad)	2010	2015	230	230		230	
E		W00 Electrico	2011	2011	161				
		TAISHAN							
XT	50		2003	2004	144				
	50	Panther Quad	2003	2004	144	144			
	90	Panther QUAD	2004	2004				009	
XT	125	Sport	2004	2005	144				
	125	Hurricane QUAD	2004	2004				009	
	150	Explorer QUAD	2004	2004				009	
	200	Tornado QUAD	2004	2004				009	
		TAMORETTI							
	50	Retro			011				
	125	Retro			011				
	125	Stealth			136				
		TERRA MOTO							
TDX	125	F	2007	2007	114			114	
TDX	125	F Krusha	2007	2007	114			114	
TDX	125	F Street Rippa	2007	2007	114			114	
		TGB							
202	50	Classic (50cc)	2003	2014	174				
	50	Delivery(From FE no 609100)	2006	2012	047				
202	50	cc Classic	2003	2014	047				
303	50	/125cc Revolution	2002	2003	047				
303 R	50	Hawk/Laser	2004	2014	047				
F409	50	Cruise	2002	2005	047				
R	50	X Bullet	2006	2009	289			047	
R	50	X Bullet	2010	2014	289			047	
X	50	Race (2T)	2011	2012	047				
	50	/90 Hornet Quad	2004	2005				047	
	50	101R	2004	2008	174				
	50	Akros Tec	2003	2004	174				

Type	ccm		from	to	FL	FR	RL	RR	P
	50	Bullet 2 (2T)	2011	2012	047				
	50	Bullet RR	2011	2012	047			047	
	50	Bullet RS (2T)	2011	2012	047			047	
	50	City (2T)	2007	2008	289			047	
	50	City (4T)	2007	2011	289			047	
	50	Delivery Scooter (Up to E/F No 609099)	2004	2005	174				
	50	High Wheel	2002	2003	047				
	50	Tapo RR (2T)	2010	2012	047				
	50	Tapo RS (2T)	2010	2012	047				
	50	Trigger	2002	2003	047				
303	125	R Hawk (Laser)	2004	2014	289				
204	125	cc Classic	2003	2004	047				
F409	125	cc Cruise	2002	2005	047				
R	125	X Bullet	2008	2009	289			047	
R	125	X Bullet	2010	2014	289			047	
	125	Bellavita i (4T)	2012	2014	174			150	
	125	Delivery/Express	2004	2014	289				
	125	X-Motion	2008	2014	329			286	
	125	X-Motion Ri	2011	2012	329			286	
303	150	R Hawk (Laser)	2004	2014	289				
	250	Blade/Congo ATV	2006	2007	005	005		047	
	250	X-Motion i	2008	2010	329			286	
	300	Bellavita i (4T)	2012	2014	174			150	
	300	X-Motion EFi	2010	2012	329			286	
	325	Blade LE Quad (4x2)	2008	2010	047	047		005	
	325	Blade SL Quad (4x2)	2011	2012	047	047		005	
	325	Quad Blade (4x2)	2007	2011	047	047		005	
	325	Target (4x2)	2009	2011	047	047		005	
	400	Avenger LE (4x2)	2009	2010	230	230			
	400	Avenger Quad (4x2)	2007	2008	230	230		230	
	400	Target (4x2)	2009	2010	047	047		005	
	425	Blade Quad (4x4)	2007	2008	230	230		230	
	425	Blade SE (4x4)	2009	2010	230	230			
	425	Target (4x4)	2009	2011	047	047		005	
	450	Blade SE (4x4)	2010	2011	230	230		005	
	460	Blade IRS Target	2012	2012	047	047		005	
	460	Blade R Target	2012	2012	047	047		005	
	460	Blade SL IRS (4x4)	2012	2012	230	230		005	
	500	Avenger R (4x2)	2009	2010	230	230			
	500	Target (4x2)	2009	2010	047	047		005	
	510	Blade LE	2011	2012	230	230		005	
	525	Blade SE (4x4)	2009	2010	230	230		230	
	525	Blade SL 4 x 4	2009	2010	230	230		005	
	525	SE (4 x 4)	2009	2009				005	
	525	Target (4x4)	2009	2011	047	047		005	
	550	Blade IRS LT	2010	2012	230	230		005	
	550	Blade IRS Target (4x4)	2011	2012	230	230		005	
	550	Blade LT (4x4)	2010	2011	230	230		005	
	550	Blade SE (4x4)	2009	2011	230	230		005	
	550	Blade SL (4x4)	2009	2010	230	230		005	
	550	Gunner 4x4 Target	2010	2012	230	230		230	
	550	Target IRS Blade LT	2010	2012	230	230			
302		Sport (50cc)	2003	2008	289				
304		Sport (125cc)	2003	2004	289				
309		RS (50cc)	2002	2003	289				
404		Executive	2003	2008	289				
		THUMPSTAR							
	90	Thumpstar Junior	2004	2006	114				
	110	Thumpstar Supa	2004	2006	114				
	125	Thumpstar Expert	2006	2006	114				
	125	Thumpstar Pro	2005	2006	114				
	125	Thumpstar Road Ripper	2006	2006	114			114	
		THUNDERHEART CALIPER							
		4 Piston Caliper			132				
		6 Piston Caliper			126				
		TM							
	80	/85 Minicross/Junior	1996	2000	047			077	
	80	/85/100 Junior Cross (Small wheel)	2002	2004	031			023	
	80	/85/100 (Big wheel)	2002	2004	031			023	
	80	/85/100 Junior	2005	2008	031				
	80	Cross	1996	2001	031			023	
	80	Enduro	1996	2000	031			023	
MX	85		1994	2002	031				
MX	85		2006	2012	031			003	
MX	85	(Big Wheel)	2002	2004	031			003	
MX	85	(Big Wheel)	2005	2015	031			187	
MX	85	JR	2002	2004	031			003	
MX	85	JR (Small Wheel)	2005	2015	031			187	
SM	85		2018	2019	176			176	
	85	Cross	1996	2001	031			023	
EN	125	/250/250 F-ES/450 F-ES	2003	2004	031			187	
EN	125	Enduro (2T)	2001	2004	031			003	
EN	125	Enduro (2T)	2005	2009	031			187	
EN	125	Enduro (2T)	2010	2014	031			187	
EN	125	Enduro (2T)	2015	2015	031			187	

Type	ccm		from	to	FL	FR	RL	RR	P
EN/MX	125	/144/250/300/450/530 All models	2010	2014	031			187	
EN/MX	125	/144/250/300/450/530 All models	2015	2015	031			187	
MX	125		1996	2000	031			023	
MX	125	(2T)	2001	2004	031			003	
MX	125	(2T)	2005	2009	031			187	
MX	125	(2T)	2010	2014	031			187	
MX	125	(2T)	2015	2015	031			187	
SMM	125	(2T)	2008	2015	177			038	
SMM	125	Black Dream (Rim brake)	2004	2010				038	
SMR	125	(2T)	2005	2011	064			187	
SMR	125	(2T)	2012	2015	064			187	
SMR	125	(2T)	2015	2015	177			187	
SMX	125		2006	2014	031				
SMX	125	(2T)	2015	2015	177			187	
	125	Cross	1995	2000	031			023	
	125	Enduro	1995	2000	031			023	
EN	144	(2T)	2008	2009	031				
EN	144	Enduro (2T)	2010	2014	031			187	
EN	144	Enduro (2T)	2015	2015	031			187	
MX	144	(2T)	2008	2009	031				
MX	144	(2T)	2010	2014	031			187	
MX	144	(2T)	2015	2015	031			187	
EN	250	(2T)	2005	2009	031			187	
EN	250	(2T)	2010	2014	031			187	
EN	250	(2T)	2015	2015	031			187	
EN	250	Enduro (2T)	2001	2004	031			003	
EN	250	F (4T) Enduro	2005	2009	031			187	
EN	250	F Enduro (4T)	2004	2004	031			003	
EN	250	Fi (4T) Enduro	2010	2014	031			187	
EN	250	Fi (4T) Enduro	2015	2015	031			187	
MX	250	(2T)	2001	2004	031			003	
MX	250	(2T)	2005	2008	031			187	
MX	250	(2T)	2010	2014	031			187	
MX	250	(2T)	2015	2015	031			187	
MX	250	(4T)	2002	2004	031			003	
MX	250	(4T)	2005	2009	031			187	
MX	250	Fi (4T)	2010	2014	031			187	
MX	250	Fi (4T)	2015	2015	031			187	
SM	250		2002	2002	064			003	
SME	250	(4T)	2004	2004	064			003	
SME	250	(4T)	2006	2006				003	
SMM	250	(2T)	2005	2014	064			038	
SMM	250	(2T)	2015	2015	177			038	
SMM	250	F (4T)	2010	2010	177			038	
SMM	250	F (4T)	2010	2015	177			187	
SMR	250	(2T)	2005	2014	064				
SMR	250	(2T)	2015	2015	177			187	
SMR	250	F (2T/4T)	2010	2015	177			187	
SMX	250	(2T)	2015	2015	177			187	
SMX	250	F	2010	2015				187	
	250	Cross	1995	2000	031			023	
	250	E	1995	2000	031			023	
	250	Enduro	1995	2000	031			023	
EN	300	Enduro (2T)	2001	2004	031			003	
EN	300	Enduro (2T)	2005	2009	031			187	
EN	300	Enduro (2T)	2010	2014	031			187	
EN	300	Enduro (2T)	2015	2015	031			187	
MX	300		1998	2000	031				
MX	300	(2T)	2001	2004	031			003	
MX	300	(2T)	2005	2009	031			187	
MX	300	(2T)	2010	2014	031			187	
MX	300	(2T)	2015	2015	031			187	
SMM	300	(2T)	2005	2014	064			038	
SMM	300	(2T)	2015	2015	177			038	
SMR	300	(2T)	2005	2014	064			187	
SMR	300	(2T)	2015	2015	177			187	
SMX	300	(2T)	2015	2015	177			187	
	300	Cross	1995	2000	031			023	
	300	Enduro (2T)	1995	2000	031			023	
MX	320		1996	2000	031				
MX	400	Cross (4T)	2002	2003	031			003	
MX	400	F	2000	2000	031				
SM	400		2002	2003	064			003	
SME	400	(4T)	2004	2004	064			003	
SMF	400	F	2002	2002	064				
SMM	400	(4T) Rim brake	2004	2004				038	
SMR	400	F	2003	2003	064				
	400	Cross (4T)	1995	2000	031			023	
EN	450	/530 Supermoto wit 320mm Disc	2005	2009	031			187	
EN	450	F (4T)	2005	2015	031			187	
EN	450	Fi	2005	2009	031			187	
EN	450	Fi (4T) Enduro	2010	2014	031			187	
EN	450	Fi (4T) Enduro	2015	2015	031			187	
FT	450	Fi	2017	2017	031				
MX	450	F	2004	2004	031			003	
MX	450	Fi (4T)	2005	2009	031			187	

Type	ccm		from	to	FL	FR	RL	RR	P
MX	450	Fi (4T)	2010	2014	031			187	
MX	450	Fi (4T)	2015	2015	031			187	
SMM	450	F	2011	2015	177			187	
SMM	450	F Black Dream E-S	2008	2008	177			038	
SMR	450	F(4T)	2010	2015	177			187	
SMR	450	FES	2005	2009	064			187	
SMX	450	F	2003	2003	064				
SMX	450	F	2005	2015	177			187	
EN	530	F (4T)	2004	2004	031			003	
EN	530	F (4T) Enduro	2011	2014	031			187	
EN	530	F (4T) Enduro	2015	2015	031			187	
EN	530	F Enduro	2005	2009	031			187	
EN	530	F-ES	2003	2004	064				
MX	530	(4T)	2001	2004	031				
MX	530	F	2005	2009	031			187	
MX	530	F	2010	2014	031			187	
MX	530	F	2015	2015	031			187	
SM	530		2002	2003	064			003	
SME	530	(4T)	2004	2004	064			003	
SMM	530	F Black Dream (Rim brake)	2004	2010	177			038	
SMM	530	F Black Dream ES	2008	2010	177				
SMM	530	Fi	2015	2015	177				
SMR	530	F (4T)	2010	2015	177			187	
SMR	530	FES	2005	2009	064			187	
SMR	530	Fi	2010	2015				187	
SMR	530	Fi (4T)	2010	2015	177			187	
SMX	530	F	2005	2015				187	
	530	(4T) Cross	2002	2003	064			003	
	530	Cross (4T)	1998	2000	031			023	
SMX	600	F	2003	2003	064			003	
SMX	660	F	2004	2004	117				
SMX	660	F	2005	2010	177			187	
		TOMOS							
		Alpino (Front disc)			121				
		APN6			121				
		Fantastic 25			121				
		Hip Hop			121				
		Racing			121				
		Revival TS			121				
		Streetmate	2005	2005	115				
		Streetmate R			115				
BT	50	S	1989	1989	120				
MC	50	Senior	2005	2005	190			190	
MC	50	Senior Pro	2004	2004	107			107	
MC	50	Senior Pro	2005	2007	173			173	
N	50	AT, BT	1991	1991	120				
SE	50		2005	2005	095			121	
	50	Revival/Revival TS	2003	2004	115				
	50	Streetmate	2003	2004	115				
	50	Twister			174				
	50	Youngst'r	2005	2008	121				
CTX	80		1989	1989	120				
SE	125	F	2005	2008	095			121	
SM	125	F	2005	2008	152			121	
SM	125	F (Rad.cal.)	2006	2008	233			121	
	125	Twister			174				
		TORNAX							
RX	80				038				
		TRIUMPH							
T140		D Bonneville (Lester Alloy Wheels)	1979	1981	365			365	
T140		E Bonneville	1978	1983	365			365	
T140		E/ES (750cc) (Executive/Alloy Wheels)	1981	1983	365			365	
T140		ES (750cc) (Electric Start)	1980	1981	365			365	
T140		Silver Jubilee Bonneville	1977	1977	365			365	
T140		V Bonneville (5 Speed Gearbox/Drum rear brake)	1973	1974	365				
T140		V Bonneville (Disc All Round/5 Speed Gearbox)	1975	1978	365			365	
T150		V (Trident 3 cyl)	1973	1974	365			365	
T160		V (Trident 3 cyl)	1975	1975	365			365	
T595		Daytona	1997	1997	017	017		247	
		Sprint (All carb models from VIN 9083)	1994	1998	017	017		088	
		Sprint (All Carb Models) Up to VIN 9082	1993	1993				088	
		Sprint RS (From VIN 139277) (Single sided swing arm up to VIN161317) (6bolt front disc)	2003	2004	017	017		247	
		Sprint RS (From VIN139277) (6 bolt front Disc)	2002	2002	017	017		088	
		Sprint RS (up to VIN139276) (6bolt front disc) (Double sided swing arm)	1999	2001	017	017		088	
TT	600		2000	2003	017	017		020	
	600	Daytona	2003	2004	017	017		020	
	600	Speedfour	2002	2005	017	017		020	
	650	Daytona	2005	2005	017	017		020	
	660	Street Triple S (Nissin F/Brembo R Calipers)	2017	2020	014	014		023	
	675	Daytona	2006	2008	207	207		020	
	675	Daytona (Nissin F/Brembo R Calipers)	2013	2017	296	296		023	
	675	Daytona Black Monobloc radial caliper	2009	2012	296	296		020	

Type	ccm		from	to	FL	FR	RL	RR	P
	675	Daytona R (Brembo Calipers F&R)	2013	2017	258	258		023	
	675	Daytona R (Brembo F/Nissin R calipers)	2011	2012	258	258		020	
	675	Street Triple (Naked)	2007	2012	014	014		020	
	675	Street Triple (Nissin F/Brembo R Calipers)	2013	2016	014	014		023	
	675	Street Triple R	2009	2012	207	207		020	
	675	Street Triple R (Nissn F/Brembo R Calipers)	2013	2016	014	014		023	
	675	Street Triple RX (Nissin F/Brembo R Calipers)	2015	2016	207	207		023	
T140	750	Bonneville (L.F Harris Made Machine / Brembo Calipers) (Meridian Models)	1985	1988	081	081		081	
TSS	750	(8 valve)	1983	1983	365			365	
TSX	750		1983	1983	365			365	
	750	Daytona (3cyl)	1992	1992	017	017		088	
	750	Speed Triple (Carb Model)	1994	1996	017	017		088	
	750	Trident	1992	1998	002	009		088	
	765	Daytona Moto 2	2020	2020	304	304		023	
	765	Street Triple R (Brembo 4 piston radial front calipers/Brembo single piston rear caliper)	2017	2020	258	258		023	
	765	Street Triple RS (Brembo 4 piston radial monobloc front calipers/Brembo single piston rear caliper)	2017	2020	258	258		023	
	765	Street Triple S ABS (Nissin 2 piston front calipers/Brembo single piston rear caliper)	2018	2020	152	152		023	
	790	Speedmaster (Carb)	2003	2004	014			247	
T100	800	Bonneville (790cc)	2002	2004	022	022		247	
	800	Bonneville (790cc)	2001	2006	022	022		247	
	800	Bonneville America (Spoke Wheel)	2002	2006	022	022		247	
	800	Tiger (Non ABS)	2011	2014	014	014		020	
	800	Tiger (With ABS)	2011	2014	014	014		020	
	800	Tiger XC (ABS)	2011	2020	014	014		020	
	800	Tiger XC (Non ABS)	2011	2014	014	014		020	
	800	Tiger XCa (ABS) up to VIN 855531	2015	2018	014	014		020	
	800	Tiger XCa (ABS) from VIN 855532	2018	2020	031	031		020	
	800	Tiger XCx (ABS) up to VIN 855531	2015	2018	014	014		020	
	800	Tiger XCx (ABS) from VIN 855532	2018	2020	031	031		020	
	800	Tiger XR (ABS)	2015	2018	014	014		020	
	800	Tiger XRt (ABS) up to VIN 855531	2015	2018	014	014		020	
	800	Tiger XRt (ABS) from VIN 855532	2018	2020	031	031		020	
	800	Tiger XRx (ABS) up to VIN 855531	2015	2018	014	014		020	
	800	Tiger XRx (ABS) from VIN 855532	2018	2020	031	031		020	
	855	Tiger (Carbs) (Up to VIN 71698)	1992	1997				088	
	855	i Tiger (From VIN 71699)	1998	1999	014	014		014	
T100	865	Bonneville	2005	2009	022	022		247	
T100	865	Bonneville (Air Cooled/Spoke Wheel)	2010	2016	022	022		247	
T100	865	Bonneville Black (Spoke Wheel/Air Cooled)	2014	2016	022	022		247	
T214	865	Bonneville (Spoke Wheel)	2015	2015	022	022		247	
	865	Bonneville Spirit (Spoke Wheel)	2015	2015	022	022		247	
	865	America (12 Spoke Cast wheels/865cc)	2010	2017	022	022		247	
	865	America LT (12 spoke cast wheels/865cc)	2014	2017	022	022		247	
	865	Bonneville (Cast Wheels)	2009	2015	014	014		247	
	865	Bonneville Newchurch (Cast Wheel)	2015	2015	014	014		247	
	865	Bonneville SE (Cast Wheel)	2009	2011	014	014		247	
	865	Bonneville Steve McQueen SE (Spoke Wheel)	2012	2012	022	022		247	
	865	Bonneville/Bonneville Black	2007	2008	022	022		247	
	865	Scrambler	2006	2015	022	022		247	
	865	Speedmaster (Carb)	2005	2007	014	014		247	
	865	Speedmaster (EFI)	2008	2009	022	022		247	
	865	Speedmaster (EFi)	2010	2016	014	014		247	
T509	885	Speed Triple (EFi - 6 Bolt Front Disc)	1997	1998	017	017		247	
	885	Tiger 885cc	1992	1999	014	014		014	
T100	900	Bonneville (Liquid Cooled/Spoke Wheel)	2016	2020	022	022		247	
T100	900	Bonneville Black (Liquid Cooled/Spoke Wheel)	2016	2020	022	022		247	
	900	Adventurer (T309RT/H046)	1996	2001	014	014		014	
	900	America (6 Spoke Cast wheel)	2007	2009	022	022		247	
	900	Daytona Super III (3cyl)	1994	1997	054	054		088	
	900	Daytona (3cyl)	1993	1996	017	017		088	
	900	Legend TT (T309RT/H046)	1999	2001	014	014		014	
	900	Speed Triple (Carb Model)	1994	1996	017	017		088	
	900	Street Cup (Liquid Cooled)	2016	2020	022	022		247	
	900	Street Scrambler (Liquid Cooled)	2016	2020	022	022		247	
	900	Street Twin (Liquid Cooled)	2016	2020	022	022		247	
	900	Thruxton	2004	2016	022	022		247	
	900	Thruxton Ace	2015	2016	022	022		247	
	900	Thunderbird (T309RT/H046)	1995	2003	014	014		014	
	900	Thunderbird Sport (TC374/339)	1998	2003	014	014		014	
	900	Tiger	2020	2020	258	258		020	
	900	Tiger (T400/G427)	1993	1998	002	009		002	
	900	Tiger GT	2020	2020	258	258		020	
	900	Tiger GT Low	2020	2020	258	258		020	
	900	Tiger GT Pro	2020	2020	258	258		020	
	900	Tiger Rally	2020	2020	258	258		020	
	900	Tiger Rally Pro	2020	2020	258	258		020	
	900	Trident	1992	1998	002	009		088	

Type	ccm		from	to	FL	FR	RL	RR	P
	900	Trophy (3cyl) (up to VIN 9082)	1992	1993	002	009		088	
	900	Trophy (From VIN 9083)	1994	2001	017	017		088	
T595	955	Daytona	1997	1997	017	017		247	
	955	Daytona i	2005	2006	017	017		247	
	955	Daytona i (6bolt front disc) (Single sided swinging arm)	1998	2000	017	017		247	
	955	Daytona i (From VIN 132513) (5 bolt front disc single sided s/arm)	2001	2004	017	017		247	
	955	Daytona i (From VIN132513) (5Bolt front Disc) (Double Sided s/arm)	2001	2004	017	017		020	
	955	Speed Triple (EFi - 6 Bolt Front Disc)	1999	2004	017	017		247	
	955	Sprint ST i (Non ABS) (Front Disc With offset / 6 Bolt Fixing)	1999	2004	017	017		247	
	955	Tiger 955 (Cast Wheel Model) From VIN 198875	2004	2006	014	014		088	
	955	Tiger 955cc (Spoke Wheel) Up to VIN 198874	2000	2004	014	014		014	
	1000	Daytona	1992	1992	017	017		088	
	1050	Speed Triple (4 Brembo F/Caliper/220 R/ Disc/ABS) - To VIN 461331	2007	2011	177	177		247	
	1050	Speed Triple (4 Brembo F/ Caliper/220mm R/Disc/Non ABS) - To VIN 461331	2007	2011	177	177		247	
	1050	Speed Triple (4 Pad Brembo F/Caliper /255mm R/Disc/ABS) - From VIN461332	2011	2016	304	304		247	
	1050	Speed Triple (4 Pad Brembo F/Caliper /255mm R/Disc/Non ABS) - From VIN 461332	2011	2016	304	304		247	
	1050	Speed Triple (Nissin Radial Caliper F/ Caliper/220mm R/Disc)	2005	2006	207	207		247	
	1050	Speed Triple R (2 Pad Brembo caliper/ Non ABS/5 Spoke wheel)	2012	2013	258	258		247	
	1050	Speed Triple R (2 Pad Brembo F/Caliper/ ABS/10 Spoke wheel)	2014	2016	258	258		247	
	1050	Speed Triple R (2 Pad Brembo F/Caliper/ ABS/5 Spoke wheel)	2012	2013	258	258		247	
	1050	Speed Triple R (2 Pad Brembo F/Caliper/ Non ABS/10 Spoke wheel)	2014	2016	258	258		247	
	1050	Speed Triple R (ABS)	2017	2017	258	258		247	
	1050	Speed Triple RS (ABS)	2018	2018	258	258		247	
	1050	Speed Triple S (ABS)	2017	2018	258	258		247	
	1050	Sprint GT SE (ABS)	2010	2020	017	017		247	
	1050	Sprint i ST (ABS) (Front disc with zero offset)	2011	2012	017	017		247	
	1050	Sprint ST (5 Spoke Wheel / Non ABS Model / 5 Bolt Disc With offset)	2005	2010	017	017		247	
	1050	Sprint ST (5 Spoke Wheel/ ABS Model / 5 Bolt fixing Disc With offset)	2005	2010	017	017		247	
	1050	Sprint ST (Non ABS) (Front Disc With zero offset)	2011	2012	017	017		247	
	1050	Tiger (Radial Caliper)	2007	2011	207	207		088	
	1050	Tiger SE (ABS)	2010	2013	207	207		088	
	1050	Tiger Sport (ABS)	2013	2018	207	207		247	
T120	1200	Bonneville (Liquid Cooled)	2016	2020	022	022		247	
T120	1200	Bonneville Black (Liquid Cooled)	2016	2020	022	022		247	
	1200	Bonneville Bobber (Liquid Cooled)	2017	2020	022	022		020	
	1200	Bonneville Bobber Black (Liquid Cooled)	2018	2020	031	031		020	
	1200	Bonneville Speed Twin (Liquid Cooled)	2019	2020	304	304		088	
	1200	Bonneville Speedmaster (Liquid Cooled)	2018	2018	031	031		020	
	1200	Daytona	1993	1998	017	017		088	
	1200	Thruxton (Liquid Cooled)	2016	2020	022	022		247	
	1200	Thruxton R (Liquid Cooled)	2016	2020	258	258		247	
	1200	Thruxton TFC (Liquid Cooled)	2019	2020	258	258		247	
	1200	Tiger Explorer	2012	2015	017	017		247	
	1200	Tiger Explorer XC	2013	2015	017	017		247	
	1200	Tiger XCa	2018	2020	328	328		334	
	1200	Tiger XCx	2018	2020	328	328		334	
	1200	Tiger XR	2018	2020	328	328		334	
	1200	Tiger XRt	2018	2020	328	328		334	
	1200	Tiger XRx	2018	2020	328	328		334	
	1200	Tiger XRx Low	2018	2020	328	328		334	
	1200	Trophy (4cyl) (From VIN 4902)	1994	2001	017	017		088	
	1200	Trophy (4cyl) (up to VIN 4901)	1992	1993	002	009		088	
	1215	Trophy SE	2012	2017	326	326		334	
	1215	Tiger Explorer XC	2016	2017	328	328		334	
	1215	Tiger Explorer XCa	2016	2017	328	328		334	
	1215	Tiger Explorer XCx/XCx Low	2016	2017	328	328		334	
	1215	Tiger Explorer XR	2016	2017	328	328		334	
	1215	Tiger Explorer XRt	2016	2017	328	328		334	
	1215	Tiger Explorer XRx/XRx Low	2016	2017	328	328		334	
	1215	Trophy	2012	2016	326	326		334	
	1600	Thunderbird (1597cc)	2009	2018	017	017		106	
	1700	Thundebird Storm	2011	2018	017	017		106	
	1700	Thunderbird Commander (1699cc)	2014	2018	017	017		106	
	1700	Thunderbird LT (1699cc)	2014	2018	017	017		106	
	1700	Thunderbird Nightstorm	2015	2018	017	017		106	
	1700	Thunderbird Storm (1699cc)	2011	2018	017	017		106	
	2300	Rocket III	2004	2009	017	017		106	
	2300	Rocket III Classic	2007	2009	017	017		106	
	2300	Rocket III GT	2019	2020	338	338		328	
	2300	Rocket III R	2019	2020	338	338		328	
	2300	Rocket III Roadster-ABS	2010	2018	017	017		106	
	2300	Rocket III Touring	2008	2009	017	017		106	
	2300	Rocket III Touring	2013	2017	017	017		106	
	2300	Rocket X	2015	2016	017	017		106	

Type	ccm		from	to	FL	FR	RL	RR	P
		URAL							
		Cross with Sidecar (Brembo 2 pin pad fixing)	2011	2012	141				
		Ranger with Sidecar (Brembo 2 pin pad fixing)	2011	2012	141				
		Retro with Sidecar (Brembo 2 pin pad fixing)	2011	2012	141				
		Solo ST (Brembo 2 pin pad fixing)	2011	2012	141				
		Sportsman with Sidecar (Brembo 2 pin pad fixing)	2011	2012	141				
		Tourist with Sidecar (Brembo 2 pin pad fixing)	2011	2012	141				
		Ural T (Brembo 2 pin pad fixing)	2011	2012	141				
		Wolf Solo (Brembo 2 pin pad fixing)	2011	2012	141				
		UVM							
	50	BeThere	1999	1999	047				
	50	Bingo	1999	1999	047				
	125	BeThere	1999	1999	047				
	125	Bingo	1999	1999	047				
	125	Paragon	1999	1999	047				
		VECTRIX							
VT-1			2014	2014	334			005	
VX-1		(Li/NiMh)	2007	2014	031			031	
VX-2			2012	2014	011			047	
VX-3		Li+ (3 wheeler model)	2012	2013	152			031	303
		Electric 3W (MP3 style scooter)	2007	2014				031	
		Electric std scooter	2007	2008	031			031	
		VERTEMATI							
		4 piston caliper	1999	2004	032				
		All models (2 piston Brembo)	1999	2004	031			023	
		VIALLI							
DXB	50		2006	2006	334				
FXR	50	Sport	2006	2006	114				
RX	50	Sport	2006	2006	047				
	50	Cargo	2006	2006	114				
	50	Fireforce	2006	2006	334				
	50	Jupiter	2006	2006	114				
	50	Truro	2006	2006	011				
		VICTORY							
V92SE		(Special Edition)	2000	2000	141			106	
V92TC		(Special Edition)	2003	2006	141	141		106	
		All Models	1998	2007	141			106	
		Broadwalk (Spoke Wheels)	2013	2015	207				
		Empulse TT	2016	2016	141	141	152	152	
		Magnum X-1	2015	2017	207	207			
		Ness Signature Series	2005	2007	141			106	
		Vegas	2003	2007	141			106	
		Vegas Jackpot	2008	2012	207	207		014	
		Vegas Jackpot	2013	2014	207	207		014	
	1200	Octane	2017	2017	106				
V92C	1500	(Standard Cruiser)	1998	2002	141			106	
V92DH	1500	(Deluxe Cruiser)	2001	2002	141			106	
V92SC	1500	(Sport Cruiser)	2000	2001	141			106	
	1500	Hammer S	2007	2007	141	141		106	
	1500	King Pin	2004	2007	141			106	
	1500	King Pin Tour	2004	2007	141			106	
	1500	Vegas 8-Ball	2005	2007	141			106	
	1634	Hammer	2005	2007	141	141		106	
	1634	Hammer	2008	2011	207	207		014	
	1634	Hammer 8-Ball	2010	2016	207	207		014	
	1634	King Pin	2008	2012	207	207		014	
	1634	King Pin 8-Ball	2008	2012	207	207		014	
	1634	King Pin Low	2009	2009	207	207		014	
	1634	Vegas	2008	2012	207	207		014	
	1634	Vegas 8-Ball	2008	2017	207	207		014	
	1634	Vegas Jackpot	2006	2007	141			106	
	1634	Vegas Low	2008	2009	207	207		014	
	1731	Arlen Ness Victory Vision	2010	2012	178	178		014	
	1731	Boardwalk (Spoke Wheels)	2013	2015	207			014	
	1731	Cory Ness Cross Country	2011	2012	207	207		014	
	1731	Cory Ness Jackpot	2008	2010	207	207		014	
	1731	Cross Country	2010	2017	207	207		014	
	1731	Cross Country 8-Ball	2015	2016	207	207		014	
	1731	Cross Country Touring	2012	2017	207	207		014	
	1731	Cross Roads	2010	2012	207	207		014	
	1731	Cross Roads 8-Ball	2014	2015	207	207		014	
	1731	Cross Roads 8-Ball (Cast Wheel)	2014	2014	207	207		014	
	1731	Cross Roads Classic	2013	2014	207	207		014	
	1731	Cross Roads Classic (Spoke Wheel)	2013	2014	207	207		014	
	1731	Cross Touring	2013	2017	207	207		014	
	1731	Gunner	2015	2017	207			014	
	1731	Hammer	2009	2011	207	207		014	
	1731	Hammer S	2008	2017	207	207		014	
	1731	Hard Ball (Spoke Wheel)	2012	2013	207	207		014	
	1731	Highball (Spoke&Cast Wheel)	2012	2017	207	207		014	
	1731	Jackpot	2007	2016	207	207		014	
	1731	Judge	2013	2017	207	207		014	
	1731	Magnum	2015	2017	207	207		014	

Type	ccm		from	to	FL	FR	RL	RR	P
	1731	Vision 8-Ball	2010	2012	178	178		014	
	1731	Vision Street	2008	2009	178	178		014	
	1731	Vision Tour (all models)	2008	2015	178	178		014	
	1731	Zach Ness Vegas	2011	2011	207	207		014	
		VOR							
		All models	1999	2004	031			023	
		All Models (2 Piston Brembo)	2003	2004	031				
EN	400		2002	2004	031			023	
MX	400		2002	2004	031			023	
SM	400		2002	2004				023	
	400	Cross	2000	2001	031			023	
	400	Enduro	2000	2001	031			023	
EN	450		2002	2004	031			023	
MX	450		2002	2004	031			023	
SM-E	450	/530	2003	2004	064			023	
	500	492 Enduro	1999	2004	031			023	
	500	492 Supermotard	2000	2001	031			023	
	500	495 Cross	1999	2004	031			023	
MX	503	Enduro	2000	2001	031			023	
EN	530		2002	2004	031			023	
MX	530		2002	2004	031			023	
SM	530		2002	2004	031			023	
		VOXAN							
	1000	Café Racer	2002	2005	064	064		152	
	1000	Cyclope	2002	2002	064	064		152	
	1000	Roadster	2002	2005	064	064		152	
	1000	Roadster	2006	2008	141	141		152	
	1000	Scrambler	2006	2006	022	022		088	
GTV	1200		2008	2008	177	177		152	
VB1--EVO			2003	2004	141	141		152	
		Black Magic	2004	2008	141	141		152	
		Cafe Racer	2006	2008	141	141		152	
		Charade Racing	2006	2006	177	177		038	
		Street Scrambler	2003	2005	064	064		152	
		Street Scrambler	2007	2008	141			152	
		W.K.BIKES							
SM	50		2011	2012	121			121	
VS	50	(4T/Scooter)	2013	2015	011				
WK	50	GP2 (2T)	2010	2014	136				
WK	50	GO (4T)	2011	2015	011				
WK	50	GTR (2T)	2010	2014	152			137	
WK	50	One (2T)	2010	2012	136				
	50	Bellisima (4T)	2013	2015	011				
	50	Wasp R (2T)	2013	2015	011			121	
RT	125		2015	2015	289				
SP	125	N	2013	2015	064				
WK	125	C (4T) (16" wheel)	2010	2015	334			018	
WK	125	Cruiser (4T)	2015	2015	011			011	
WK	125	R (4T)	2010	2014	014			332	
WK	125	SC (4T) (14"wheels)	2010	2014	334			152	
WK	125	Sport	2011	2014	014			332	
	125	Bellisima (4T)	2013	2015	011				
	125	RR	2012	2013				010	
	125	S Symphony (4T) (Rear Disc Model)	2010	2012				137	
	125	SR Symphony	2010	2012				137	
	125	Tomcat (4T)	2015	2015	011				
	125	Trail	2011	2015	332			187	
	125	Wasp (4T)	2013	2015	011			332	
NK	150		2015	2015	361				
SP	250	N	2015	2015	064				
WK	250	Jetmax (4T)	2010	2014	334	332		152	
GTR	300		2013	2015	011			332	
WK	400	Trail	2015	2017				402	
	650	i (Naked)	2013	2015	104	124		093	
	650	TR (Touring)	2013	2015	104	124		093	
		WILWOOD							
GP	300	/310 (Part # 150-8733-2)			064				
		PS1 Caliper (Part # 150-4091K)			232				
		WRM							
MX	450		2006	2006	031			191	
		WT MOTORS							
	50	Bilbao (4T)	2008	2009	011				
WT	500	Alaska Quad	2008	2009	284	284		281	
		WUYANG							
WY	50	QT	2006	2007	114				
WY	125	12	2006	2007	289				
WY	125	16C	2006	2007	289				
WY	125	24B	2006	2007	332				
		XINGFU							
XF	150	A	1997	1997	049				
		XISPA							
X	125	R	2008	2009	168, 198			173	
X	250	R	2008	2009	168, 198			173	
X	280	R	2008	2009	168, 198			173	

Type	ccm		from	to	FL	FR	RL	RR	P
		XOR							
XO	125	2 (4.0KW)	2013	2014	332				
XO		2 (8.0kW)	2013	2014	332				
		YAMAHA							
BW	50	Bump	1997	1997	098				
BW	50	Next Generation (4BXM/G370)	1996	1996	098				
BW	50	Spy	1995	1995	098				
BW'S	50	(5WW1)	2004	2004	098, 107				
BW'S	50	(5WW4/6/8/9/B/D/F/H/K/M/P)	2005	2015	098, 107				
BW'S	50	Naked (1D11/2B71)	2003	2004	098, 107				
BW'S	50	Naked (2B7B/D/F/H)	2009	2015	098, 107				
BW'S	50	Next Generation (Twin Headlight Model) (190mm disc)	1999	2007	098, 107				
BW'S	50	Original (180mm Disc)	1999	2002	098, 107				
BW'S	50	R (5SX1)	2001	2001	098, 107				
CR	50	Target	1991	1991	114				
CR	50	Z (4FW/-)	1992	1992	114				
CR-Z	50	(3WN)	1991	1995	114				
CS	50	Jog R	2006	2015	098, 107				
CS	50	Jog RR	2003	2003	098				
CS	50	P/R Jog R	2002	2005	098, 107				
CS	50	Z (Jog RR)	2006	2012	098, 107				
CV	50	(5KN1/2) Jog-Cool Style	2000	2002	224				
CV	50	ZR (5PT1) Evolution	2001	2002	224				
CW	50	(5FXJ/VG5SA BW'S) (190mm Front Disc)	2000	2000	098, 107				
CW	50	(5MS2/4G54R)	2002	2002	098, 107				
CW	50	(5WW4/BWS)	2004	2007	098, 107				
CW	50	NG Bi-Wizz	1999	1999	098				
CW	50	RS (4YA1/2/BW's) (180mm front disc)	1996	1997	098, 107				
CW	50	RS (5FXA/VGSA BW'S) (190mm Front Disc)	1999	1999	098, 107				
CW	50	RS (5FXM/VG5SA BWS)(190mm front disc)	2001	2005	098, 107				
CW	50	RSP (5CC1/3/4YA BW's Spy) (180mm front disc)	1997	1998	098, 107				
CY	50	RS Jog R	1996	1996	114				
DR	50	R-L (SM-5VB1/VG55BK)	2002	2003	115				
DT	50	LC	1998	1998	034				
DT	50	R	1997	2001	115				
DT	50	R	2002	2008	211			211	
DT	50	R (3MN/-)	1989	1995	018				
DT	50	R (Supermotard)	2004	2008	122				
DT	50	R-L (SM-SVB1/VGS 5BK)	2002	2003	115				
DT	50	X	2004	2008				211	
EW	50	Slider	2000	2005	128				
FZR	50		1990	1990	009			067	
FZR	50		1992	1992	002			001	
JOG	50	(Spain)	1988	1988	114				
JOG-Z	50		1988	1989	114				
JOG-Z	50		1990	1990	107				
NS	50	Aerox (2T)	2013	2016	098, 107			128	
NS	50	F Aerox 4	2014	2018	098, 107			128	
NS	50	N Aerox Naked (2T)	2013	2016	098, 107			128	
RD	50	MX/RD 50	1981	1987	151				
RS	50	Champ	1988	1988	114				
RZ	50	(5FC1/2)	2002	2002	146				
TDR	50		1990	1990	018			018	
TZM	50		1990	1992	009			018	
TZM	50	R	1994	1994	009			018	
TZR	50		1990	1992	009			018	
TZR	50		1993	2002	009			033	
TZR	50	(5WX1) Power	2003	2016	122			121	
TZR	50	R	1993	1996	332				
TZR	50	Thunderkid (41V21) (5DU1/3)	1997	2000	332			018	
YA	50	Axis (4PC)	1995	1996	098, 107				
YA	50	ZA Jog Z (4SC1)	1995	1995	114				
YE	50	Zest	1993	1995	098, 107				
YE	50	Zest (Italy)	1992	1992	107				
YE	50	Zest (Japan) (4FW/G392)	1992	1992	114				
YFM	50	Breeze (4KH)	1994	1995	098, 107				
YH	50		1998	1998	107				
YH	50	Why	1999	2009	098, 107				
YM	50	Breeze (4RC/G929)	1994	1994	107				
YN	50	Neos (2T) (F5C2/IH5C2)	2007	2016	098, 107				
YN	50	Neos (4T) (5C3)	2009	2018	098, 107				
YN	50	Neo's (5C21)	2007	2016	098				

Type	ccm		from	to	FL	FR	RL	RR	P
YN	50	Neos (5RN/1P9)	2002	2006	098, 107				
YN	50	R Neos (5AD/5MR/5RN3)	1997	2002	098, 107				
YQ	50	Aerox R / Aerox	1997	2016	098, 107			128	
YSR	50	A, B	1990	1991	018				
YSR	50	D	1992	1992	018				
YSR	50	T	1987	1987	018				
ZR	50	Jog	2001	2002	224				
	50	Axis Pro Foot	1992	1992	114				
	50	Breeze	1995	1995	107				
	50	Cygnus	1996	1996	018				
YZ	65		2018	2020	034			077	
YXR	66	FAS/FAT Rhino 4x4 Side x Side	2004	2005	009	002		295	
DT	80	LC (37A)	1981	1984	113				
DT	80	LC-2 (53V)	1985	1992	018				
RD	80	(Air Cooled)	1982	1982	151				
RD	80	LC	1982	1982	113				
RD	80	LC (30W/D021)	1983	1983	018				
RX	80	SE (12N/C607)	1982	1982	151				
YE	80	Zest (Italy)	1993	1995	107				
YE	80	Zest (Japan) (4MU/G699)	1993	1993	114				
YSR	80		1986	1986	018				
YZ	80	A, B, D	1990	1992	034				
YZ	80	E/F/LWF/LWG/G/LWH/H/LWJ/J/LWK/ K/L/LWL/LWM/M/LWN/N	1993	2001	034			077	
YZ	80	Oversize with 240mm disc	1993	2001	034			077	
YZ	80	Oversize with 250mm disc	1993	2001	034			077	
YZ	80	S, T, U, W	1986	2001	034				
YZ	85	(2T - Big wheel F19" / R16")	2002	2020	034			077	
YZ	85	(2T - Small wheel F17"/R14")	2002	2015	034			077	
YFM	90	RY	2009	2009				047	
YFM	90	RZ/RA/RB/RD Raptor (With Rear Parking Brake)	2010	2013				005	
BW	100	S	2000	2000	114				
FJ	100	L, LC	1984	1984	015			015	
RX	100		1984	1984	113				
X	100	SR Jet Sport	2006	2015	169				
YN	100	Neos	2000	2003	098, 107				
YQ	100	Aerox	2000	2004	098, 107				
YW	100	T Booster BWs	1996	1996	114				
T	105	E (5ER1/2) Crypton R	1999	1999	146				
T	105	SE Crypton (5EA3)	2002	2002	146				
V	110	ZE/ZK/ZHE/ZHK/FIZR/FIZR Sport	1996	1996	146				
	113	MIO	2005	2007	224				
	113	MIO Sporty	2005	2007	224				
	113	Nuovo-Z	2006	2007	224				
AT	115	Neo (Brasil) (2B81/2/3))	2005	2007	146				
AT	115	Neo CVT/Brasil (15S1)	2008	2008	146				
RX	115	(5FS3)	1999	1999	113				
XC	115	S-D'elight	2014	2016	264				
DT	125	Chesterfield Scout	1989	1990				065	
DT	125	LC	1986	1987	018				
DT	125	R	1988	2003	018			018	
DT	125	R, Electric (4BL/F803)	1988	1988	018			018	
DT	125	RE	2004	2004	018			018	
DT	125	RE	2005	2007	018			001	
DT	125	Tenere	1989	1990	006			065	
DT	125	X	2005	2006	106			001	
GPD	125	A-N-MAX / 2DS1	2015	2018	380			264	
GT	125	Hammerhead	2012	2018	031			001	
HW	125		2012	2018	330				
JP	125	X-City	2008	2008	262			152	
LTS	125	C-D'elight	2017	2018	380				
MT	125	(Non ABS)	2014	2016	251			230	
MT	125	A (ABS)	2014	2020	251			230	
MW	125	Tricity Scooter	2014	2016	358	357		221	
MWS	125	Tricity Scooter (3 Wheeler)	2017	2018	358	357		264	
NCX	125	K Cygnus X Cab (HC6-1)	2007	2010	363				
NCX	125	L Cygnus X Injection (4C6-2)	2007	2010	363				
N-Max	125	See GPD 125 A	2015	2018	380			264	
RD	125	LC	1982	1984	113				
RD	125	LC (MK 2-3)	1985	1987	067				
RZ	125	(1GV 030101-)	1985	1985	067				
SR	125	SE	1992	1996	113				
SR	125		1997	2003	099				
TDR	125	(3HS1/3XDO/3HS3/3XD01)	1989	1993	006			094	
TDR	125	(4GW/GX 1/2/3/4)	1993	2003	099			018	
TDR	125	R Lightburner (3SH2/3XE2)	1993	1994	006			038	
TT-R	125	LW	2000	2020	034				
TW	125	(5EK/5RS)	1999	2004	146				
TZ	125		1994	1997	017			158	
TZR	125		1987	1989	067				
TZR	125		1990	1992	015			067	
TZR	125		1993	1993	099				
TZR	125		1994	1994	099				

Type	ccm		from	to	FL	FR	RL	RR	P
TZR	125	R	1993	1993	070			067	
TZR	125	R Brembo Caliper (4DL1/4DL2)	1991	1993	064			038	
TZR	125	RR	1996	1996	064			038	
VP	125	X-City (16P)	2008	2015	014			152	
WR	125		1991	1997	002			001	
WR	125		1998	2001	041			003	
WR	125	R	2009	2015	022			023	
WR	125	X (Supermoto)	2009	2018	022			023	
XC	125	R	2014	2015	022			023	
XC	125	TR Cygnus	1996	2003	018				
XC	125	Vity (4P7)	2008	2013	264				
X-MAX	125	Momo Design	2015	2015	014			023	
XN	125	Teos	2001	2003	098, 107				
XP	125	RA X-Max - IRON Max (ABS)	2016	2016	014			146	
XQ	125	/150 N Maxter	2001	2003	031			152	
XT	125	R (3D61/3D63/13D1/13D3/13D5)	2005	2012	211			211	
XT	125	X (13D2/13D4/13D6)	2007	2011	122			211	
XT	125	X (3D62/3D64)	2005	2006	122			211	
XTZ	125	(5RM)	2003	2010	002				
XTZ	125	K/E	2005	2010	002				
XV	125	Virago	1997	2000	099				
XVS	125	Drag Star	2000	2003	099				
YBA	125	Enticer (3P01/3P41)	2005	2006	031				
YBR	125	(3D92/9)	2007	2009	264				
YBR	125	(51D1/2)	2010	2016	264				
YBR	125	Custom	2008	2016	264				
YBR	125	ED (3D91)	2005	2006	018				
YBR	125	ED (5HHB/F/H) Brasil (Disc front)	2006	2008	334				
YP	125	Majesty	1998	2001	031				
YP	125	Majesty	2002	2009	031				
YP	125	Majesty DX (Taiwan Production)	2002	2002	014				
YP	125	R (X-Max - ABS) (39D2/Nissin F/Caliper)	2011	2017	014			146	
YP	125	R (X-Max - Non ABS) (39D1/5) Nissin F/Caliper	2010	2015	014			152	
YP	125	R (X-Max)	2006	2009	262			152	
YP	125	R X- Max (2DM/Heng Tong R/Caliper)	2014	2014	014				
YP	125	R X-Max (2DM/Brembo R/Caliper)	2014	2016	014			152	
YP	125	R X-Max Sport	2011	2012	014			152	
YP	125	RA X- Max ABS (39D2/Nissin F/Caliper)	2011	2017	014				
YP	125	X-Max Business (ABS)	2011	2011	014			146	
YS	125		2017	2019	264				
YW	125	(BW´s 125)	2010	2013	330				
YW	125	X (1DN1/2]	2010	2013	363				
YZ	125		2001	2001	041			003	
YZ	125	A/B	1990	1991	002			001	
YZ	125	D/E/F/G/H/J	1992	1997	002			100	
YZ	125	K/L/M (2T)	1998	2000	041			003	
YZ	125	N/P (2T)	2001	2002	041			003	
YZ	125	N/S/T	1985	1988	043				
YZ	125	R	1991	1991	002			100	
YZ	125	R/S/T/V/W (2T)	2003	2007	041			187	
YZ	125	U	1988	1988	043			018	
YZ	125	W	1989	1989	002			077	
YZ	125	X/Y/Z/A/B/D/E/F/G/H/J (2T)	2008	2020	248			187	
YZF-R	125		2008	2013	031			230	
YZF-R	125	(Radial F/Caliper/Non ABS)	2014	2016	251			230	
YZF-R	125	A (Radial F/Caliper/ABS)	2014	2020	251			230	
YZF-R	125	Inc Monster Energy Edition	2019	2020	251			001	
	125	Majesty S (XC 125 R)	2014	2015	022			023	
	125	X- Max 125 (2DM/Brembo R/Caliper)	2014	2016	014	014			
	125	Xenter	2012	2018	330				
RX	135	(13X)	1981	1981	113				
T	135	HC/S (2S61) Crypton X/Jupiter MX/ Spark 135/Exciter/135 LC/Sniper	2006	2008	264				
T	135	SE (1S71)(Automatic Clutch) Crypton X/Jupiter MX/Spark 135/Exciter/135 LC/Sniper	2006	2008	264				
GPD	150	A-N-MAX / 2DP4	2015	2018	380			264	
HW	150		2012	2017	330				
N-Max	150	See GPD 150 A	2015	2017	380			264	
TZR	150	R (4AP2)	2000	2000	099			067	
XC	150	Fly One	1992	1992	018				
XC	150	Fly One R	1998	1998	018				
XQ	150	Maxter	2001	2003	031			152	
YP	150	Majesty (SG08/EBE0)	1998	2000	031				
YP	150	Majesty (SG08/EBE0)	2001	2001	031			152	
	150	Xenter	2012	2017	330				
XC	155	F/G SMAX	2015	2016	014			023	
DT	175		2000	2000	146				
RT	180	A, B, D	1990	1992	029				
RT	180	E	1993	1993	029				
RT	180	G, H	1995	1996	018				
YP	180	R Majesty	2004	2004	031			152	
DT	200	(2LR)	1987	1987	018				
DT	200	R	1989	1989	018			018	
DT	200	WR (3XP)	1992	1993	002			100	
SDR	200	(2TV)	1987	1989	067			067	

Type	ccm		from	to	FL	FR	RL	RR	P
TW	200	(2JL/4CS1-6/5LB1/2)	1991	2002	146			001	
WR	200	D/E/F	1992	1994	002			001	
YFS	200	R/S/T/V Blaster	2003	2006	144	144		007	
ST	225	Bronco (5BT)	1997	1997	146				
TW	225	E (5VC1/2)	2002	2003	146				
XT	225	(2LN) Serow (1KH 020101-)	1986	1987	018				
XT	225	(3RW1-5 Serrow) (1KH 034101-132000)	1989	1993	018				
XT	225	(4VW1/3/5/7/9)(4VWA/B/D/G/J/L) (Brasil)	1997	2006	018				
XT	225	Serow	2005	2005	146				
XT	225	W (4JG1/2/3/4) Serrow	1993	1996	018				
XT	225	WE (4JG5/6) Serrow	1997	1998	146			100	
DT	230	(4TP1/2) Lanza	1997	1998	002			100	
XV	240	Virago	1992	1992	113				
CP	250	(1B71) Maxam / Morphus	2005	2006	107			268	
FZ	250	Phazer	1985	1986	015	015			
FZR	250		1987	1987	073	073		067	
FZR	250	R	1989	1999				067	
FZX	250	Zeal (3YX1/2/4)	1991	1992	048			067	
R1-Z	250		1990	1992				067	
RD	250		1980	1983	151				
RM	250	R (29L)			113				
RZ	250	(4L3)			151				
RZ	250	R (1AR/1XG)			067			067	
RZ	250	R (29L)			113	113		067	
RZ	250	RR (51L)			067			067	
SR	250	Classic (21L)	1996	2000	113				
SRV	250	"Soulfultwin/Renaissa" (4DN1-6)	1992	1997	048				
SRX	250				067				
TDR	250	(3CK1/3CK2 Europe) (Eng Frame # 3CK-)	1988	1992	073			067	
TT	250		1990	1990	043				
TT	250	R (4GY) Raid / 4MR2	1996	1996	002			100	
TT	250	R (4GY1 Japan)	1993	1994	002			100	
TT	250	R (4GY3/4GY5/4WA1) Raid	1994	1996	002			100	
TT	250	R (4RR1/2 Japan)	1995	1997	002			100	
TT	250	RL (4PX5)	1999	1999	002			100	
TT	250	RL/RM/RN/RP/RR/RS	1999	2004	002			001	
TT	250	RM (4PX6)	2000	2000	002			100	
TY	250	R	1991	1992	121				
TY	250	R	1993	1994	121			121	
TY	250	Z (Scottish)	1996	1996	018			001	
TYZ	250	R	1993	1996	121			121	
TZ	250		1989	2001	017	017		158	
TZ	250	(Radial Caliper)	2002	2010	207	207		158	
TZR	250	(1KT/2AW Japan) (Eng Frame # 1KT-000/056)	1987	1987	073			067	
TZR	250	(2MA/2XW1/22XW2 Europe) (Eng Frame # 2MA-)	1987	1988	073	073		067	
TZR	250	(2MA/2XW1/2XW2 Europe) (Eng Frame #2MA-)	1989	1992	073			067	
TZR	250	(2XT1 Japan) (Eng Frame 1KT-09)	1988	1988	073			067	
TZR	250	(3CK1/3CK2 Europe) ((Eng Frame # 3CK-)	1988	1992				067	
TZR	250	(3MA1 - Reverse Cylinders) (Eng Frame # 3MA-0001)	1989	1989	070	070		067	
TZR	250	(3MA3/3MA5) (Eng Frame # 3MA-046/058)	1990	1990	070	070		067	
TZR	250	R (3XV1/3X4/3XV6) V-Twin (Eng Frame # 3XV000101-08600)	1991	1993	070	070		067	
TZR	250	RS (3XV8/3XV9/3XVA) V-Twin (Eng Frame # 3XV080101/08200 088-)	1992	1994	070	070		067	
TZR	250	SP (3MA4) (Eng Frame # 3MA055)	1990	1990	070	070		067	
TZR	250	SPR (3XVC) V-Twin (Eng Frame # 3XV 107101-)	1995	1995	070	070		067	
VP	250	X-City (5B2)	2007	2016	014			146	
WR	250	ZB	1991	1991	002			001	
WR	250	ZD/ZE/ZF/ZG/ZH/ZJ	1992	1997	002			001	
WR	250	ZK	1998	1998	041			003	
WR	250	FN/FP (4T)	2001	2002	041			003	
WR	250	FR/FS (4T)	2003	2004	041			187	
WR	250	FT/FV/FW/FX/FY/FZ/FA/FB/FD (4T)	2005	2014	041			187	
WR	250	FF/FG (4T/Reverse Cylinder)	2015	2016	041			187	
WR	250	FH/FJ (4T/Reverse Cylinder)	2017	2020	248			187	
WR	250	RX/RY (32D1/3)	2008	2010	041			023	
WR	250	R (32D1/3)	2011	2020	041			187	
WR	250	XX/XY (Supermoto) (32D2/4)	2008	2010	022			023	
WR	250	XX/XY (32D2-)	2011	2015	022			187	
XG	250	Tricker (5XT1)	2004	2006	146			001	
X-Max	250	Momo Design	2015	2015	014			023	
X-MAX	250	(2DL/Non ABS/HengTong R-Caliper)	2014	2016	014			348	
XP	250	R X-MAC (ICO) (Brembo Front Caliper / Non ABS)	2005	2009	262			146	
XP	250	R X-Max (2PLI) Non ABS (Nissin Front/ Brembo Rear)	2014	2015	014				
XP	250	R X-Max (37P) (Nissan Front Caliper/ Non ABS)	2010	2013	014			146	
XP	250	R X-Max (Non ABS)	2014	2016	014				
XP	250	RA X-Max - Iron Max (ABS)	2016	2016	014			146	
XP	250	R-X-Max (ICO) (Brembo Front Caliper / Non ABS)	2005	2009	262				
XS	250	C	1978	1978	082			082	
XS	250	D/E	1979	1981	082				
XT	250	Serrow (3C51/52)	2005	2008	146			001	

Type	ccm		from	to	FL	FR	RL	RR	P
XTZ	250	Lander (Brasil) (4B41/2)	2007	2008	002			001	
XTZ	250	Lander (Brasil) (4B43)	2009	2009	002				
XV	250	S Virago	1995	2000	099				
XV	250	Virago	1989	1994	113				
XVS	250	Drag Star	2001	2004	099				
YBR	250	(5D11/3/4)	2007	2011	332				
YFM	250	BT/BV Bruin	2005	2006	144	144			
YFM	250	BW/BX/BY Big Bear	2007	2010	144	144			
YFM	250	R (33B)	2009	2011	252	253		007	
YFM	250	R (IBT)	2012	2013	252	253		007	
YFM	250	RX/RY Raptor	2008	2009	252	253		007	
YFM	250	XN/XP/XR/XS	2001	2004	144	144			
YP	250	Majesty	1996	1997	099				
YP	250	DX/A Majesty	1998	2003	099			146	
YP	250	R (X-Max)	2005	2009	262			146	
YP	250	R X-MAX (2DL / Non ABS / Heng Tong R-Caliper)	2014	2016	014			348	
YP	250	R X-Max (ABS)	2011	2016	014			146	
YP	250	R X-Max Sport	2011	2012	014			146	
YS	250	Fazer (Brasil) (1S41/2/3)	2006	2008	332				
YTZ	250	N/S "TRI-Z"	1985	1986	018	018		018	
YZ	250	N/S/T	1985	1987	043				
YZ	250	U	1988	1988	043			018	
YZ	250	W/WRW	1989	1989	002			077	
YZ	250	A/WRA/B	1990	1991	002			001	
YZ	250	D/E/F/G/H/J	1992	1997	002			100	
YZ	250	K/L/M/N/P	1998	2002	041			003	
YZ	250	R/S/T/V/W	2003	2007	041			187	
YZ	250	X/Y/Z/A/B/D/E/F/G/H/J (2T)	2008	2018	248			187	
YZ	250	FN/FP (4T)	2001	2002	041			003	
YZ	250	FR/FS/FT/FV (4T)	2003	2006	041			187	
YZ	250	FW/FX/FY (4T)	2007	2009	248			187	
YZ	250	FZ/FA/FB/FD/FE/FF (4T)	2010	2015	248			187	
YZ	250	FG/FH/FJ (270mm Disc)	2016	2020	248			187	
YZ	250	FGY (60th Anniversary Edition/270mm Disc)	2016	2016	248			187	
VP	300	Versity	2003	2005	031			031	
XC	300	V Versity	2006	2006	031			031	
XC	300	Versity	2006	2006	014				
YFM	300	B/D Grizzly	2012	2014	047	047			
YZF	300	R3 (321cc/ABS)	2015	2020	369			370	
MTN	320	A (MT-03 321cc)	2016	2018	369			370	
RD	350	F/F2	1985	1992	067	067		067	
RD	350	LX	1981	1982	151	151			
RD	350	N	1985	1985	067	067		067	
RD	350	R	1992	1995	067	067		067	
RD	350	YPVS	1983	1984	113	113		015	
TT	350	(ITJ)	1985	1989	043				
TT	350	A (3GJ)	1990	1995	043				
XT	350		1985	1995	018				
YFM	350	ANS/ANT/ANV Bruin 2x4	2004	2006	144	144			
YFM	350	FAS/FAT/FAV Bruin 4x4	2004	2006	144	144			
YFM	350	FGIW/FGIX/FGIY/FGIZ Grizzly 4WD IRS	2007	2010	144	144			
YFM	350	FWA Grizzly 4WD	2004	2014	144	144			
YFM	350	FXG/FXH/FXJ/FXK/FXL/FXM/FXN/ FXPFXR/FXS Wolverine	1995	2004	144	144		007	
YFM	350	GW/GX/GY/GZ Grizzly 2WD	2008	2010	144	144			
YFM	350	L Big Bear	1999	1999	144	144			
YFM	350	S/T/V/R-WV/RW/RX/RY/RZ Raptor	2004	2010	007	007		007	
YFM	350	XD/XE/XF/XG/XH/XJ/XK/XL/XM/XN/ XP/XR	1992	2004	144	144		007	
YFM	350	XW/XXW/XX 2WD Wolverine	2006	2009	144	144			
YFZ	350	A/B/D/E/F/G/H/J/K/L/M/N/P/R/S/T/V Banshee	1990	2009	144	144		007	
YFZ	350	T/U/W	1987	1989	018	018		007	
XS	360	C	1976	1976	082			082	
FZ	400	(4YR1)	1996	1996	141	141		067	
FZ	400	N (IFK 146X 133M)	1985	1985	015	015		067	
FZR	400	(3EN1/3EN2)	1988	1989	073	073		067	
FZR	400	(3TJ1/2/6/7)			070	070		067	
FZR	400	Genesis (1WG)	1986	1986	015	015		067	
FZR	400	RR (4DX)	1992	1992	070	070		067	
FZR	400	RSP (2TK EX-UP)	1987	1987	073			067	
SR	400	(2RD)	2014	2017	048				
SRX	400		1987	1987	073			067	
SRX	400	(1JL)	1985	1985	015			067	
SRX	400	(3VN1/3VN2/3VN5)	1990	1996	073	073		067	
WR	400	FK	1998	1998	041			100	
WR	400	FL/FM	1999	2000	041			003	
WR	400	FN	2001	2001	041			003	
XJR	400	(4HM1/4HM2/4HM4/4HM7)	1993	1996	099	099		067	
XJR	400	(4MH3/4HM5/4HM6 /4HM9/4HMA/ 4HMB) Brembo Calipers	1995	1999	141	141		067	
XP	400	Majesty	2004	2004	048				
XP	400	RA X-Max - Iron Max (ABS)	2016	2016	014			146	
XP	400	X-MAX Momo Design (ABS)	2015	2015	014			355	
XS	400		1979	1979	082	082			
XS	400		1982	1982	113				

GOLD fren

Type	ccm		from	to	FL	FR	RL	RR	P
XS	400	C	1978	1978	082			082	
XVS	400		1996	1996	048				
YFM	400	AR Kodiak (5VH3/4)	2003	2003	144	144			
YFM	400	FAM/FAN	2000	2001	144	144	182	182	
YFM	400	FGW/FGX Grizzly	2007	2008	144	144		182	
YFM	400	FWP Big Bear 4x4	2002	2002	007	007			
YFM	400	FWT (Big Bear)	2005	2005	144	144	182	182	
YP	400	Majesty (ABS)	2007	2013	099	099		268	
YP	400	Majesty (Non ABS)	2004	2013	099	099		268	
YP	400	R X-Max (Non ABS)	2013	2016	014	014		146	
YP	400	RA X-Max (ABS)	2013	2018	014	014		146	
YP	400	X-Max Momo Design (ABS)	2015	2015	014	014			
YZ	400	F	2001	2001	041				
YZ	400	F	2002	2002	041				
YZ	400	FK	1998	1998	041			001	
YZ	400	FL	1999	1999	041			003	
WR	426	FN/FP	2001	2002	041			003	
YZ	426	FM/FN/FP	2000	2002	041			003	
WR	450	F, Oversize with 270mm disc	2006	2008	041			187	
WR	450	FG/FH/FJ (270mm F Disc/4T)	2016	2020	248			187	
WR	450	FR/FS/FT/FV/FW/FX/FY/FA/FB/FD/FE/ FF (4T)	2003	2015	041			187	
YFM	450	FAR/FAS	2003	2004	144	144		182	
YFM	450	FAT/FAHT/FAV (Kodiak)	2005	2006	144	144		182	
YFM	450	FXV/FXW/FXX/FXY/FXZ Wolverine	2006	2010	144	144		182	
YFM	450	FWA Grizzly IRS	2011	2016	144	144			
YFM	450	FWAD Grizzly EPS (Power Steering)	2011	2014	144	144			
YFZ	450	B/D	2013	2014	144	144		188	
YFZ	450	S/T	2004	2005	009	002		007	
YFZ	450	V/W/X	2006	2008	009	002		188	
YFZ	450	RY/RZ (Quad)	2009	2010	009	002		188	
YFZ	450	R	2011	2014	009	002		188	
YFZ	450	RSEA/RSEB/RSED/RSE	2011	2014	009	002		188	
YZ	450	F, Oversize with 270mm disc	2003	2007	041			187	
YZ	450	FR/FS/FT/FV/FW	2003	2007	041			187	
YZ	450	FX/FY (4T)	2008	2009	248			187	
YZ	450	FZ/FA/FB/FD/FE/FF (4T)	2010	2015	248			187	
YZ	450	FGY (60th Anniversary Edition/270mm Disc)	2016	2016	248			187	
YZ	450	FG/FH/FJ (270mm Disc)	2016	2020	248			187	
YZF	450	Efi	2020		403			187	
YZ	490	N/S/T/U	1985	1988	043				
YZ	490	U, W, A	1988	1990	043				
RD	500	LC (1GE/D769)	1984	1986	015	015		067	
RD	500	LC (47X/D467)	1984	1987	015	015			
RZV	500	R (SIX)	1985	1985	015	015		067	
SR	500		1978	1982	082				
WR	500	ZD	1992	1992	002			001	
XP	500	A T-MAX - LUX MAX (ABS)	2016	2016	070	070			
XP	500	A T-Max (530cc Engine / ABS Models)	2012	2016	070	070			
XP	500	Black Bronze Max (59CE)	2013	2014	070	070			
XP	500	N/P/R T-Max	2001	2003	048				
XP	500	S/T/V T-Max (5VU1/2)	2004	2007	099	099		268	
XP	500	T-Max (ABS Models)	2008	2011	070	070		268	
XP	500	T-Max (Non ABS Models)	2008	2011	070	070		268	
XP	500	T-Max (530cc Engine / Non ABS Models)	2012	2016	070	070			
XS	500	C/D	1978	1979	082			082	
XT	500		1986	1986	018				
XT	500	Austria	1983	1983	113				
XT	500	E (Austria)	1990	1996	033				
XV	500	SE (26R/D098)	1983	1988	113	113			
XP	530	A (530cc Iron MAX - ABS Models)	2015	2016	070	070			
XP	530	A T-Max SX (530cc) (ABS)	2017	2019	070	070			
	530	D-A T-Max DX (530cc) (ABS)	2017	2018	070	070			
	530	E-A T-Max (530cc) (ABS)	2017	2018	070	070			
XV	535	/535 S "Virago"	1995	2003	048				
XV	535	Virago	1988	1994	322				
XJ	550		1981	1984	151	151			
XJ	550	H/J/K Maxim	1981	1983	151				
XJ	550	RH/RJ/RK Seca	1981	1983	151				
XZ	550		1982	1984	113				
YFM	550	FWA Grizzly IRS	2011	2014	252	253	255	256	
YFM	550	FWAD Grizzly EPS (Power Steering)	2011	2014	252	253	255	256	
FZ	600		1987	1988	015	015		067	
FZ6	600	(Naked Version)	2004	2007	099	099		021	
FZ6	600	Fazer (Half Fairing/Non ABS/ 2 Piston Caliper) (5VX/5VXL)	2004	2007	099	099		021	
FZ6	600	Fazer S2 (ABS) (4 Piston Caliper)	2007	2009	070	070		021	
FZ6	600	Fazer S2 (ABS/Half Fairing/4 piston caliper) (5S2)	2008	2008	070	070		021	
FZ6	600	Fazer S2 (Non ABS/Half Fairing/4 Piston Caliper) (4S81/4S8)	2007	2009	070	070		021	
FZ6	600	Naked/Non ABS/ 2 Piston Caliper (1B3/1B3D)	2004	2007	099	099		021	
FZ6	600	NS Naked / Non ABS/2 Piston Caliper	2005	2006	099	099		021	
FZ6	600	S2 (Naked / Non ABS/4 Piston Caliper) (5S51/5S5)	2007	2009	070	070		021	
FZ6	600	S2 ABS (Naked)	2007	2009	070	070		021	
FZR	600		1989	1989	015	015		015	

Type	ccm		from	to	FL	FR	RL	RR	P
FZR	600		1990	1993	028	028		015	
FZR	600	R	1994	1995	028	028		015	
FZS	600	Fazer	1998	2003	070	070		067	
SRX	600		1986	1987	067	067		067	
SRX	600	(1JK)	1985	1985	067	067		067	
SRX	600	(3SX)	1990	1991	073			067	
TT	600	E (4GV2)	1994	1995	031			100	
TT	600	E (4LW3/4LW4/4GV4/4GV5)	1994	2001	031			023	
TT	600	K (4LW1/4GV1/4LW2) Up to 4GV 003403 (Nissin Rear Caliper)	1993	1995	031			001	
TT	600	K From 4GV 003404 (Brembo Rear Caliper)	1995	1996	031			023	
TT	600	N (59X) Frame #59X000101-59X007852	1985	1988	018				
TT	600	R (5CH1/5CH2/5CH3)	1997	2002	031			023	
TT	600	RE (5CH5)	2004	2004	031			023	
TT	600	W (2JT/3SW1) (Frame # 59X007853-)	1989	1992	043				
XJ	600		1984	1991	015	015		015	
XJ	600	N	1995	1997	048			067	
XJ	600	N	1998	2003	099	099		067	
XJ	600	S "Diversion"	1992	1997	048			067	
XJ	600	S "Diversion"	1998	2003	099	099		067	
XJ6	600	Diversion (ABS)	2009	2009	099	099		021	
XJ6	600	Diversion (Non ABS)	2009	2009	099	099		021	
XJ6	600	SP	2013	2013	099	099		021	
XJ6-F	600	Diversion (Full Fairing - 1CW1) (Non ABS/ABS)	2010	2015	099	099		021	
XJ6-N	600	(Naked 20S) (Non ABS/ABS)	2009	2015	099	099		021	
XJ6-S	600	Diversion (Top Fairing - 36) ABS and Non ABS Version	2009	2015	099	099		021	
XT	600		1984	1986	113				
XT	600		1987	1987	029			018	
XT	600	(2KF/E580)	1986	1994	113				
XT	600	(Z Tenere)	1984	1984	113				
XT	600	E	1992	2003	033			018	
XT	600	E Supermotard with 320mm disc	1995	2003	033			018	
XT	600	Z "Tenere"	1985	1986	029				
XT	600	Z "Tenere"	1988	1990	029			018	
YFM	600	FWAK/FWAL/FWAM/FWAN, 4x4 Grizzly	1998	2001	007	007			
YFM	600	HM "Grizzly Hunting"	2000	2000	007	007			
YX	600	S/SC/T/TC/UC/U/W/WC/A/AC "Radian"	1986	1990	015	015			
YZF	600	"R6"	1999	2002	070	070			
YZF	600	"R6"	2003	2004	070	070		021	
YZF	600	R Thundercat	1996	2003	070	070		015	
YZF	600	R-6	2005	2007	070	070		021	
YZF	600	R6 (13S1)	2008	2016	070	070		021	
YZF	600	R6 (Rad.cal.)	2017	2020	070	070		242	
YZF	600	RRR (R6)	2003	2004	070	070		020	
XJ	650		1980	1984	082	082			
XJ	650	LH Midnight	1981	1981	082	082			
XJ	650	LK Seca	1983	1983	113	113			
XJ	650	RJ Seca	1982	1982	082	082			
XJ	650	Turbo	1982	1982	113	113			
XS	650		1977	1981	082	082			
XS	650	SE	1979	1980	082	082		082	
XS	650	SE	1981	1981	082	082			
XVS	650	A Dragstar Classic	1998	2007	048				
XVS	650	Drag Star	1997	2004	048				
MT-03	660		2006	2012	099	099		023	
SZR	660	RR	1996	1997	064			038	
XT	660	R	2004	2016	106			023	
XT	660	X Supermoto	2004	2016	141			023	
XT	660	Z Tenere (ABS)	2008	2016	031			023	
XT	660	Z Tenere (Non ABS)	2008	2015	031			023	
XT	660	ZA Tenere (ABS)	2011	2016	031			023	
XTZ	660	E "Tenere"	1991	1998	033			018	
YFM	660	FR/FS/FT Grizzly	2003	2005	007	007		281	
YFM	660	FWAP/FWAR/FWAS/FWAT/FWAW/FGW/ FGX Grizzly	2002	2008	007	007		281	
YFM	660	RN/RP/RR/RS Raptor	2001	2004	007	007		007	
FZX	700	S/SC/T/TC Fazer	1986	1987	015		015	015	
MT-07	700	(689cc/2 Cyl) Non ABS	2014	2016	070	070		021	
MT-07	700	Moto Cage (ABS/2 Cyl)	2015	2017	070	070		021	
MT-07A	700	(689cc/2Cyl) ABS	2014	2018	070	070		021	
MT-07A	700	Moto Cage (Non ABS)	2014	2016	070	070		021	
	700	Tracer (MTT 690)	2016	2020	070	070		021	
XSR	700	ABS (MTM 690-U)	2016	2020	070	070		021	
XT	700	Z Tenere	2018	2020	031			023	
YFM	700	FWAD Grizzly EPS	2007	2018	252	253	255	256	
YFM	700	RD Raptor	2013	2013	009	002		188	
YFM	700	RE	2013	2014	009	002		188	
YFM	700	RSE	2013	2018	009	002		188	
YFM	700	RV/RW/RX/RY/RA/RB Raptor	2006	2012	009	002		295	
YXC	700	E Viking VI EPS (YXC700PF/PXG/PXH/ PXJ)	2015	2018	345	033			317
YXM	700	E Viking EPS COMO (YXM70VPHG)	2016	2016	345	033			317
YXM	700	E Wolverine R (YXE70WPHG)	2016	2016	345	033			317
YXM	700	ES - Viking EPS SE (YXM700PSE)	2014	2016	345	033			317
YXR	700	FA/FB/FD Rhino Side x Side	2011	2013	009	002	009	002	317

Type	ccm		from	to	FL	FR	RL	RR	P
YXR	700	Rhino 4x4 SE	2009	2009	009	002		002	317
FZ	750		1985	1988	015	015		015	
FZ	750		1989	1991	073	073		015	
FZ	750	Genesis	1987	1987	073	073		015	
FZR	750	R "OWOI"	1989	1990	017	017		015	
FZX	750		1987	1987	015	015		015	
XJ	750		1982	1984	151	151			
XJ	750	RF/RJ/RK Seca	1981	1983	151	151			
XS	750		1977	1979	082	082		082	
XS	750	SE	1979	1980	082	082		082	
XTZ	750	Super Tenere (3WM/F343)	1989	1995	009	002		009	
XV	750		1994	1997	048	048			
XV	750	Virago	1992	1993	015	015			
YZF	750	R/SP	1993	1997	054	054		015	
YZF	750	R7 "0W02" (Road version) (5FL1)	1999	2001	070	070		169	
YZF	750	R7 0W02 (Race Version)	1999	2001	126	126			
FZ8	800	(Single Headlight)	2010	2015	070	070		021	
FZ8	800	NA-Naked/Single Headlight/ ABS (RN256/59P1)	2011	2015	070	070		021	
FZ8	800	N-Naked/Single Headlight/Non ABS (RN255/39P1)	2011	2015	070	070		021	
FZ8-S	800	Fazer 8 (Top fairing/Twin headlight/ Non ABS) (RN251/42P1)	2011	2015	070	070		021	
FZ8-SA	800	Fazer 8 (Top fairing/Twin headlight/ ABS) (RN252/1BD1)	2011	2015	070	070		021	
	847	Nikken (ABS) (3 cyl)	2018	2020	070	070		242	
TDM	850		1991	1995	073	073		015	
TDM	850		1996	2001	028	028		015	
TRX	850		1996	1999	073			015	
TRX	850	(Italy)	1995	1995	073	073		015	
XS	850		1980	1980	082	082		082	
MT-09	900	(1RC) Non ABS (847cc/3cyl)	2014	2016	070	070		021	
MT-09	900	(2DR) ABS (847cc/3cyl)	2014	2016	070	070		021	
MT-09	900	A Sport Tracker (ABS) (847cc/3cyl)	2014	2016	070	070		021	
MT-09	900	ABS (MT850-A 847cc/ 3 Cyl Engine)	2017	2020	070	070		021	
MT-09	900	SP ABS (MT850-D 847cc/3 Cyl Engine)	2018	2020	070	070		021	
MT-09	900	SR Street Rally ABS (847cc/3cyl)	2014	2016	070	070		021	
MT-09	900	Tracer (ABS847cc/3 Cyl engine)	2015	2020	070	070		021	
MT-09	900	Tracer GT ABS (847cc/3 Cyl Engine)	2018	2018	070	070		021	
TDM	900	(2BO/ABS)	2005	2013	070	070		165	
TDM	900	(5PS/Non ABS)	2002	2014	070	070		165	
XJ	900	/900 F	1983	1992	015	015		015	
XJ	900	S Diversion	1995	2003	048	048		015	
XSR	900	(ABS) (MTM850)	2016	2020	070	070		021	
XSR	900	Abarth ABS (MTM 850)	2017	2018	070	070		021	
SCR	950	(XVS 950XR-A)	2017	2018	048	048		165	
XV	950	CU - XVS 950	2014	2016	048			165	
XV	950	Racer (Remote Reservoir Rear Shocks)	2015	2016	048			165	
XV	950	R-XVS 950 (2DE/Remote Reservoir Rear Shocks]	2014	2020	048			165	
XVS	950	(Non ABS/Standard rear shocks)	2014	2014	048	048		165	
XVS	950	A Midnight Star	2009	2013	048	048		165	
XVS	950	ABS (1XC1) (Standard rear shocks)	2014	2015	048	048			
FZ1	1000	Fazer (Half Fairing - ABS - 5D0)	2008	2015	070	070		021	
FZ1	1000	Fazer (Half Fairing / Non ABS)	2006	2015	070	070		021	
FZ1	1000	N/NA Naked (Non ABS/ABS)	2010	2015	070	070		021	
FZ1	1000	N/NV (2D11/2/3)	2006	2009	070	070		021	
FZ1	1000	S/FZ1-SV	2006	2009	070	070		021	
FZR	1000	EX UP (6 piston caliper)	1994	1995	054	054		015	
FZR	1000	EX UP (Std Forks)	1989	1990	028	028		015	
FZR	1000	EX UP (USD Forks)	1991	1993	045	045		015	
FZR	1000	Genesis	1987	1988	073	073		015	
FZS	1000	Fazer	2001	2005	070	070		222	
GTS	1000		1993	1999	204			015	
MT-10	1000	(MTN 1000/998cc)	2016	2020	070	070		021	
MT-10	1000	Tourer Edition (998cc)	2018	2020	070	070		021	
MT-10	1000	SP (MTN 1000D/998cc)	2017	2020	070	070		021	
XV	1000	SE Virago	1986	1988	015	015			
XV	1000	TR1	1981	1981	082	082			
XV	1000	Virago (2AE/E163)	1986	1988	015	015			
YXZ	1000	R EPS (Side x Side) YXZ10PXG	2016	2016					317
YXZ	1000	R SE (Side x Side)	2016	2016					317
YXZ	1000	R SS (Side x Side)	2017	2018					317
YZF	1000	R "Thunderace"	1996	2002	070	070		015	
YZF	1000	R1	1998	2000	070	070		169	
YZF	1000	R1	2002	2003	070	070		021	
YZF	1000	R1	2004	2006	070	070		021	
YZF	1000	R1 (6 piston radial caliper)	2007	2014	246	246		021	
YZF	1000	R1 (Rad.cal.) (4-pad) ABS	2012	2014	246	246		021	
YZF	1000	R1	2015	2020	070	070		242	
YZF	1000	R1 50th Anniversary	2006	2006	070	070		021	
YZF	1000	R1 60th Anniversary Edition	2016	2016	070	070		242	
YZF	1000	R1M	2015	2020	070	070		242	
YZF	1000	R1M Mission	2020	2020	070	070		242	
YZF	1000	R1 SP	2006	2006	070	070		021	
BT	1100	P/R/S/T/V Bulldog	2002	2006	070	070		015	
FJ	1100		1984	1985	015	015		015	
GL	1100	AC Aspencade "Goldwing"	1982	1982	049	049			

Type	ccm		from	to	FL	FR	RL	RR	P
XS	1100		1978	1980	082	082		082	
XS	1100	S	1981	1981	151	151		082	
XV	1100	Virago	1989	1993	015	015			
XV	1100	Virago	1994	1998	048	048			
XV	1100	Virago	1999	1999	099	099		015	
XVS	1100	A "Dragstar Classic"	2000	2007	099	099		015	
XVS	1100	Dragstar	1999	2004	099	099		015	
FJ	1200	(3CV/3XW Type)	1988	1995	073	073		015	
FJ	1200	(ITX Type)	1986	1987	015	015		015	
FJ	1200	A (ABS Model)	1991	1995	028	028		015	
V-MAX	1200		1991	1992	015	015		015	
V-MAX	1200		1993	2003	028	028		015	
XJR	1200		1995	1998	073	073		015	
XJR	1200	(Italy)	1995	1995	141	141		015	
XT	1200	Z Super Tenere ABS/UBS Brake System	2010	2018	070	070		165	
XT	1200	ZE Super Tenere ABS/UBS Brake System	2014	2018	070	070		165	
XT	1200	ZE Super Tenere Raid Edition (ABS/UBS Brake system)	2018	2018	070	070		165	
XV	1200	DL, DC2	1984	1984	015	015		015	
XV	1200	Venture Royale	1985	1985	015	015		015	
XVZ	1200	12 TD	1985	1985	015	015		015	
FJR	1300	(Non ABS) (5JW)	2001	2004	070	070		165	
FJR	1300	A (ABS) (5VS-)	2003	2005	070	070		165	
FJR	1300	A (ABS)	2006	2009	326	326		165	
FJR	1300	A (ABS)	2010	2012	326	326		165	
FJR	1300	A (ABS)	2013	2020	326	326		165	
FJR	1300	AE (Electronic Suspension Adjustment/ USD Forks)	2014	2020	326	326		165	
FJR	1300	AS (ABS/Electric Shift)	2006	2009	326	326		165	
FJR	1300	AS (ABS/Electric Shift)	2010	2012	326	326		165	
FJR	1300	AS (ABS/Electric Shift)	2013	2020	326	326		165	
XJR	1300	(5EA1/5EA7) Brembo calipers (320 mm front disc)	1998	1999	141			015	
XJR	1300	/1300 SP	1999	2001	070	070		015	
XJR	1300	5EA9/5EAG (298mm front disc)	2000	2000	070	070		169	
XJR	1300	C/Racer	2015	2016	070	070		222	
XJR	1300	L 5EA2/5EA3/5EA4	1999	1999	070	070		015	
XJR	1300	M 5EAA/5EAB/5EAC	2000	2000	070	070		015	
XJR	1300	N/P (5EAP/5EAR/5EAS/5EAT/5EAW/ 5EAV/5EAY)(298 mm front disc)	2001	2002	070	070		222	
XJR	1300	R/S (5WM1/5WM3/5WM5/5WM6/5W M7/5WM9)	2003	2004	070	070		222	
XJR	1300	SP (L) 5EA5/5EA6/6EA8	1999	1999	070	070		015	
XJR	1300	SP (M) 5EAD/5EAE/5EAF	2000	2000	070	070		015	
XJR	1300	SP (N) 5EAL/5EAM/5EAN	2001	2001	070	070		015	
XJR	1300	T/V/W/X/Y (5WMA/5WMC/5WMD/5WMF)	2005	2014	070	070		222	
XVS	1300	A Midnight Star	2007	2016	099	099		165	
XVS	1300	ACFD Midnight Star/Casual Full Dresser (With Handlebar Fairing)	2014	2016	099	099		165	
XVS	1300	CU Custom	2014	2017	048	048		165	
XVZ	1300	AH/ATH "Royal Star" Royal Star Classic	1996	2000	073	073		073	
XVZ	1300	Royal Star Venture S	2008	2011	048	048			
XVZ	1300	TF "Venture Star"	1999	2001	048	048		073	
XVZ	1300	Venture Royale (3JS/F115)	1986	1989	073	073		073	
XVZ	1300	Venture Royale (3JS/F115)	1990	1995	073	073		073	
XV	1600	A "Wildstar"	1999	2004	048	048		073	
MT-01	1670	(Rad.cal.)	2005	2006	070	070		014	
MT-01	1670	(6 piston radial caliper)	2007	2010	246	246		014	
MT-01	1670	S (5YUR)	2009	2009	246	246		014	
MT-01	1700		2007	2016	246	246		014	
XV	1700	Road Star Warrior	2002	2003				073	
XV	1700	PCR	2003	2005	070	070		165	
XV	1700	V-Max	2009	2020	246	246		165	
XV	1900	A Midnight Star	2006	2008	070	070		165	
XV	1900	A Midnight Star	2011	2013	326	326		165	
XV	1900	ACFD Midnight Star/Handlebar Fairing	2013	2016	326	326		165	
XV	1900	Raider SCL	2012	2012	070	070		165	
XV	1900	Roadliner	2006	2007	070	070		165	
XVS	1900	A (Midnight Star 3 Spring Clutch)	2011	2013	326	326		165	
XVS	1900	A (Midnight Star 3 spring clutch)	2013	2016	326	326		165	
		ZANELLA							
	50	Racing Moped	1992	1992	038				
RZA	125		1992	1992	038				
TZ4	125	Patagonia (ARG)	1992	1992	006				
		ZERO							
DS		(ZF13.0) ((J.Juan F&R Calipers)	2016	2019	106			023	
DS		(ZF8.5/ZF11.4) (Nissin F&R Calipers)	2013	2013	041			187	
DS		(ZF8.5/ZF11.4) (Nissin F/J.Juan R Calipers)	2014	2014	041			023	
DS		(ZF9.4/ZF12.5) (J.Juan F&R Calipers)	2015	2015	106			023	
DS		ZF6 (2 Pin Fixing F-Pad)	2010	2012	174			047	
DS		ZF9 (2 Pin Fixing F-Pad)	2010	2012	174			047	
DS II		(ZF14.4)	2019	2020	106			023	
DS II		(ZF7.2)	2019	2020	106			023	
DSR		(ZF13.0) (J.Juan F&R Calipers)	2017	2019	106			023	
DSR		(ZF14.4.0)	2019	2020	106			023	
DSR		Black Forest Edition (ZF14.4.0)	2019	2020	106			023	
FX		(ZF2.8/ZF5.7) (J.Juan F & R Calipers)	2015	2015	031			023	
FX		(ZF2.8/ZF5.7) (Nissin F/J.Juan R Calipers)	2014	2014	041			023	

Type	ccm		from	to	FL	FR	RL	RR	P
FX		(ZF2.8/ZF5.7)(Nissin F&R Calipers)	2013	2013	041			187	
FX		(ZF3.3/ZF6.5) (J.Juan F&R Calipers)	2016	2020	106			023	
FXS		(ZF3.3/ZF6.5) (J.Juan F&R Calipers)	2017	2020	106			023	
MX		(2 Pin Fixing F Caliper)	2010	2012	174			047	
MX		(ZF2.8/ZF5.7) (Nissin F&R Calipers)	2013	2013	041			187	
S		(ZF14.4)	2019	2020	106			023	
S		(ZF7.2)	2019	2020	106			023	
S		(ZF8.5/ZF11.4) (Nissin F&R Calipers)	2013	2013	041			187	
S		(ZF8.5/ZF11.4) (Nissin F/J. Juan R Calipers)	2014	2014	041			023	
S		(ZF9.4/ZF12.5) (J. Juan F & R Calipers)	2015	2015	106			023	
S		(ZF9.8/ZF13.0) (J.Juan F&R Calipers)	2016	2019	106			023	
S		ZF6 (2 Pin Fixing F-Pad)	2010	2012	174			047	
SR		(ZF11.4) (Nissin F/J.Juan R Calipers)	2014	2014	041			023	
SR		(ZF12.5) (J. Juan F & R Calipers)	2015	2015	106			023	
SR		(ZF13.0) (J.Juan F&R Calipers)	2016	2020	106			023	
SR		(ZF9.4/ZF12.5) (J.Juan F&R Calipers)	2015	2015	106			023	
X		(2 Pin Fixing F Caliper)	2010	2012	174			047	
XU		(2 Pin Fixing F Caliper)	2010	2012	174			047	
XU		(Nissin F&R Calipers)	2013	2013	041			187	
		ZING BIKES							
	150	Vogue (3 wheeler)	2008	2009	344				
		ZONTES							
	50	Tiger (4T)	2014	2015	289				

Type	ccm		from	to	FL	FR	RL	RR	P
ZT	125	- 3A Tiger	2009	2015	289				
ZT	125	- 8A Panther	2009	2015	289				
ZT	125	-5A Monster	2009	2015	332			332	
ZT	125	-8A Tiger	2009	2015	332				
ZT	125	Firefly	2017	2019	401				
ZT	125	Mantis	2017	2019	401				
ZT	125	Scorpion	2017	2019	401				
R	310		2020	2020	022			020	
T	310		2020	2020	022			020	
V	310		2020	2020	022			020	
X	310		2020	2020	022			020	
		ZÜNDAPP							
KS	50	Supersport (530-50/A154)		1979	159				
KS	50	TT Watercooled (530-01/A153)	1980	1981	159				
KS	80	(530-05/C002)	1980	1980	159				
KS	80	Super	1980	1980	096				
KS	80	Super (537-01/C801)	1983	1983	184				
KS	80	Touring (530-07/C073)	1981	1981	159				
KS	125		1979	1979	184				
KS	175	(521-51/A756)	1978	1982	081				
		ZWEIRAD RÖTH							
	50	Rebell Sport			159				
	80	Rebell Sport			159				

PART NUMBER

001

AD	K1	K5	K5-LX	S3	S33 RACING

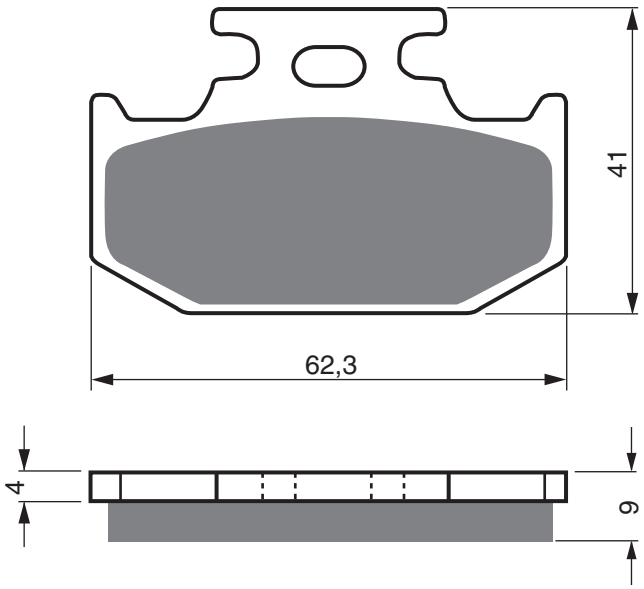

CANNONDALE

MX	400		2000 - 2003	RR
E	440	A, R	2003 - 2003	RR
S	440		2003 - 2003	RR
X	440		2003 - 2003	RR

KAWASAKI

KDX	125	A1/A2/B1/B2	1990 - 1994	RR
KX	125	G1/H1/H2/J1/J2	1989 - 1993	RR
KX	125	K1	1994 - 1994	RR
KDX	200	E1/E2/E3/E4	1989 - 1992	RR
KDX	200	E5/E6	1993 - 1994	RR
KDX	200	H1/H2/H3/H4/H5	1995 - 1999	RR
KDX	200	SR (DX 200G)		RR
KDX	220	R A4/A5/A6/A7/A8/A9/A10/A11/A12/A6F	1997 - 2006	RR
KDX	220	SR (DX 220B)		RR
KDX	250	D1-D4	1991 - 1994	RR
KDX	250	SR (KDX 250 F1)	1991 - 1991	RR
KLX	250	F1-F4 (KLX 250 ES)	1994 - 1997	RR
KLX	250	G1	1994 - 1994	RR
KLX	250	R D1/D2	1993 - 1994	RR
KX	250	G1/H1/H2/J1/J2	1989 - 1993	RR
KX	250	K1	1994 - 1994	RR
KX	500	E1-E5	1989 - 1993	RR
KX	500	E6-E7	1994 - 1995	RR
KLX	650	C1/C2/C3	1993 - 1997	RR
KLX	650	R	2001 - 2003	RR
KLX	650	R (KLX650C/G245)	1993 - 1995	RR

SUZUKI

RM	125	K/L/M	1989 - 1991	RR
TS	125	RK/RL/RM/RN/RP/RR	1990 - 1996	RR
TS	200	RK/RL/RM/RN/RP/RR	1989 - 1994	RR
DR	250	RS/RLS/RT/RV/RLV/RLW/RW/RY (SJ45A/DOHC)	1995 - 2000	RR
DR	250	RXT/RXLT/RXV/RXLV/RXW/RXLW/RXGW/RXGLW/RXY/RXGY (Dejbel 250 XC/GPS Ver (SJ45A)		RR
DR	250	SL/SM/SN/SEP/SER/SES (SJ44A)	1990 - 1995	RR
RMX	250	K/M/N/P	1989 - 1993	RR
RMX	250	T/V/W	1996 - 1998	RR
DR	350	SER/SES (Electric Start / 4 Bolt Front Disc)	1994 - 1995	RR
DR	350	SET/SEV (Electric Start / 4 Bolt Front Disc)	1996 - 1997	RR
DR	350	SEW/SEX (Electric Start / 6 bolt Front Disc)	1998 - 1999	RR
DR	350	SL/SM/SN/SP (4 bolt front disc / kick start)	1990 - 1993	RR
DR	650	SET/SEV	1996 - 1997	RR

YAMAHA

FZR	50		1992 - 1992	RR
DT	125	RE	2005 - 2007	RR
DT	125	X	2005 - 2006	RR
GT	125	Hammerhead	2012 - 2018	RR
WR	125		1991 - 1997	RR
YZ	125	A/B	1990 - 1991	RR
YZF-R	125	Inc Monster Energy Edition	2019 - 2020	RR
WR	200	D/E/F	1992 - 1994	RR
TT	250	RL/RM/RN/RP/RR/RS	1999 - 2004	RR
TY	250	Z (Scottish)	1996 - 1996	RR
WR	250	ZB	1991 - 1991	RR
WR	250	ZD/ZE/ZF/ZG/ZH/ZJ	1992 - 1997	RR
XG	250	Tricker (5XT1)	2004 - 2006	RR
XT	250	Serrow (3C51/52)	2005 - 2008	RR
XTZ	250	Lander (Brasil) (4B41/2)	2007 - 2008	RR
YZ	250	A/WRA/B	1990 - 1991	RR
YZ	400	FK	1998 - 1998	RR
WR	500	ZD	1992 - 1992	RR
TT	600	K (4LW1/4GV1/4LW2) Up to 4GV 003403 (Nissin Rear Caliper)	1993 - 1995	RR

EQUIVALENTS OEM

43082 1090	43082 1118	43082 1131	43082 1137	43082 1151	69100 15810	69140 03D00
69140 15D00	69140 28C00	5XT W0046 50				

AD	K1	K5	K5-LX	S3	S33 RACING

PART NUMBER

002

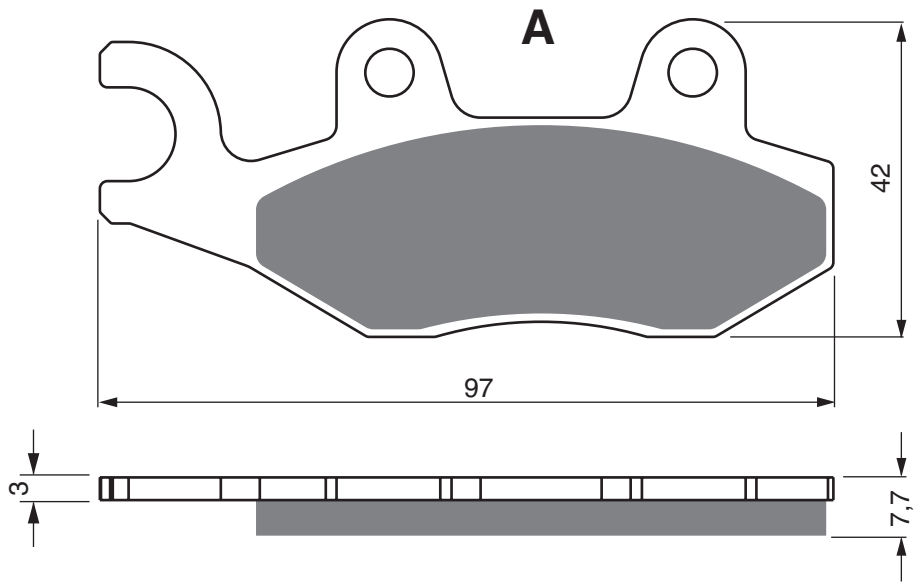

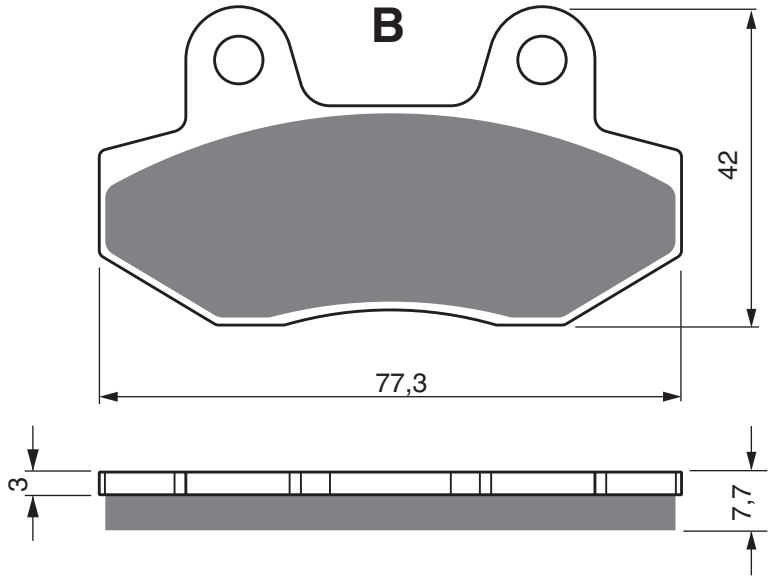

AEON					
	400	Crossland (2x4)	2012 - 2015	RR	
	400	Crossland (4x4)	2012 - 2015	RR	
APACHE					
RLX	250	S/SX (Mk1) Rear disc model		RR	
BAROSSA QUADS					
	170	Cheetah / Magna	2003 - 2005	RR	
	170	Sport	2003 - 2004	RR	
	250	Quarterback	2005 - 2005	RR	
CAN-AM					
	800	Commander (XT/DPS)	2011 - 2015	FR	RR
	800	Commander R STD EFI	2011 - 2019	FR	RR
	800	Commander R XT	2011 - 2014	FR	RR
	1 000	Commander (DPS)	2013 - 2015	FR	RR
	1 000	Commander (LTD)	2012 - 2015	FR	RR
	1 000	Commander (STD)	2011 - 2015	FR	RR
	1 000	Commander R EFI	2018 - 2019	RR	
	1 000	Commander X	2011 - 2013	FR	RR
	1 000	Commander XT	2011 - 2015	FR	RR
	1 000	Commander XT-P	2014 - 2015	FR	RR
	1 000	Maverick R STD	2014 - 2015	FR	
	1 000	Maverick R XMR	2014 - 2015	FR	
	1 000	Maverick R XRS	2014 - 2015	FR	
	1 000	Maverick R XRS/DPS	2014 - 2015	FR	
	1 000	Maverick R XXC	2014 - 2015	FR	
CF MOTO					
CF	500	-5 (Rancher UTV)	2011 - 2014	FR	
CF	500	3 (Rancher 500 Side x Side)	2010 - 2011	FL	
CF	500	AU-6L - C Force 550 (ATV)	2015 - 2015	RR	
CF	500	US - Z Force 550 (Side x Side)	2015 - 2015	FL	
CF	500	UU-A U-Force (Side x Side)	2015 - 2015	FL	
CF	600	Z Force Z6 (Side x Side)	2013 - 2015	FR	
CF	600	Z Force Z6-EX (Side x Side)	2013 - 2015	FR	
CF	625	-3 (Z6 Terra Cross)	2011 - 2012	FR	
CF	800	3 (Tracker 800 Side x Side)	2013 - 2013	FL	
CF	800	UU-AA U- Force (Side x Side)	2014 - 2016	FL	
CF	800	Z Force Z8 (Side x Side)	2013 - 2015	FL	
CF	800	Z Force Z8 - EX (Side x Side)	2014 - 2015	FL	
DERBI					
DXR	250	Quad (Front drum model)	2004 - 2005	RR	
ECO					
	150	Bushman (LX 150 GY)		FL	
GAS GAS					
KZ	250	RV Quad	2006 - 2006	FL	
GOES					
G	520	UTX (Side x Side)	2010 - 2011	FR	

PART NUMBER

002

AD | K1 | K5 | K5-LX | S3 | S33 RACING

HUSQVARNA

2T		All models	1992 - 1999	FL
4T		All models	1992 - 1999	FL
CR	125		1992 - 1994	FL
WR	125		1992 - 1994	FL
CR	250		1992 - 1994	FL
WR	250		1992 - 1994	FL
TE	350		1992 - 1994	FL
CR	360		1992 - 1994	FL
WR	360		1992 - 1994	FL
TC	610		1992 - 1994	FL
TE	610		1992 - 1994	FL

HYOSUNG

	125	Aquilia	2000 - 2001	FL

KAWASAKI

KLX	125	CAF/CBF/CCF/CCS/CDS/CDF/CEF/CFF/CGF	2010 - 2016	FL
KLX	125	DAF/DBF/DCF/DDF/DEF (D-Tracker)	2010 - 2014	FL
KX	125	G1/H1/H2/J1/J2	1989 - 1993	FL
KLX	140	(17" Front/14" Rear)	2008 - 2020	FL
KLX	140	G (21" Front/18" Rear)	2017 - 2020	FL
KLX	140	L (19" Front/16" Rear)	2008 - 2020	FL
KLX	150	D-Tracker (KLX 150HGF)	2016 - 2016	FL
KLX	150	L (KLX 150 EFF)	2014 - 2015	FL
KDX	200	E5/E6	1993 - 1994	FL
KDX	200	SR (DX 200G)		FL
KLX	230		2019 - 2020	FL
KLX	230	R	2019 - 2020	FL
KDX	250	D1-D4	1991 - 1994	FL
KDX	250	SR (KDX 250 F1)	1991 - 1991	FL
KLX	250	SF	2009 - 2020	FL
KX	250	G1/H1/H2/J1/J2	1989 - 1993	FL
KLF	300	C1-C17 Bayou	1989 - 2005	FR
KLX	300	R	2019 - 2020	FL
KLF	400	B1-B7 Bayou	1993 - 1999	FR
KX	500	E1-E5	1989 - 1993	FL
KVF	650	F7F/F8F Brute Force 4x4i Hardwoods Green	2007 - 2008	FR
KVF	650	FCF/FSC/FDF/FEF	2012 - 2014	FR
KVF	650	G7F/G8F Brute Force 4x4i Hardwoods Green	2007 - 2008	FR
KVF	650	H7F/H8F Brute Force 4x4i	2007 - 2008	FR
KRF	750	A8F/B8F Teryx 4x4 (RUV)	2008 - 2008	FR
KRF	750	F8F Teryx 4x4 NRA Outdoors (RUV)	2008 - 2008	FR
KRF	750	G9F/NAF/NBF/NCS/NDF Teryx 750 Fi 4x4	2009 - 2012	FR
KRF	750	J9FA/K9F/PAF/RAF/PBF/RBF/RCS/PDF/RDF	2009 - 2013	FR
KRF	750	L9F Teryx 750 Fi 4x4 LE Sport	2009 - 2009	FR
KRF	750	LE (RUV) C8F/D8F Teryx 4x4	2008 - 2008	FR
KRF	750	M9F Teryx 750 Fi 4x4 NRA	2009 - 2009	FR
KRF	750	SAF/SAFA/SBF/SBFA/SCS/SCSA/SDF Teryx 750 Fi 4x4 Sport LE	2010 - 2013	FR
KRF	750	TAF/VBP Teryx Fi 4x4 SGO	2010 - 2011	FR
KRT	750	ACF/ADF (Tyrex 4 750 4x4)	2012 - 2013	FR
KRT	750	ACFA/ADFA (Tyrex 750 4x4 EPS)	2012 - 2013	FR
KRT	750	CCF/CDF (Tyrex 4x4 EPS LE)	2012 - 2013	FR
KVF	750	A1/A6F/B1/B6F Brute Force 4x4	2005 - 2006	FR
KVF	750	D8F/D9F/DAF/DBF	2008 - 2011	FR
KVF	750	E8FA Brute Force 4x4 Hardwoods Green HD	2008 - 2008	FR
KVF	750	GCF/GDF/GEF/GFF/GGF/GHF (Brute Force 7504x4i/EPS)	2012 - 2017	FR
KVF	750	HCF/HDF/HEF/HFF/HGF/HHF Brute Force 4x4i EPS/Camo	2012 - 2017	FR
KVF	750	JCF/JDF/JEF/JFF/JGF/JHF Brute Force 4x4i EPS	2012 - 2017	FR
KVF	750	LCF/LDF/LEF/LFF/LGF/LHF (Brute Force 750 4x4i)	2012 - 2017	FR
KRF	800	BEF/BFF/FGF/FHF/FJF Teryx	2014 - 2018	FR
KRF	800	CEF/CFF/GGF/GHF/GJF Teryx LE	2014 - 2018	FR
KRF	800	DEF/DFF/HGF/HFF/HJF Teryx Camo	2014 - 2018	FR
KRT	800	BEF/BFF/FGF/FHF/FJF (Teryx 4)	2014 - 2018	FR
KRT	800	CEF/CFF/GGF/GHF/GJF Teryx 4 LE	2014 - 2018	FR
KRT	800	DEF/DFF/HGF/HHF/HJF Teryx 4 Camo	2014 - 2018	FR
KAF	820	AFF/AGF/AHF/AJF Mule Pro FXT	2015 - 2018	FR
KAF	820	BFF/BGF/BHF/BJF Mule Pro FXT/EPS	2015 - 2018	FR
KAF	820	CFF/CGF/CHF/CJF Mule Pro FXT /EPS LE	2015 - 2018	FR
KAF	820	DFF/DGF/DHF/DJF Mule Pro FXT/EPS Camo	2015 - 2018	FR
KAF	820	EGF/EHF/EJF Mule Pro FX	2016 - 2018	FR
KAF	820	FGF/FHF/FJF Mule Pro FX/EPS	2016 - 2018	FR
KAF	820	GGF/GHF/GJF Mule Pro FX/EPS LE	2016 - 2018	FR
KAF	820	HGF/HHF Mule Pro - FX/EPS Camo	2016 - 2017	FR
KAF	820	JGF/JHF Mule Pro - FXT Ranch Edition	2016 - 2017	FR
KAF	1 000	AGF/AHF/AJF Mule Pro DXT/Diesel	2016 - 2018	FR
KAF	1 000	BGF/BHF/BJF Mule Pro DXT Diesel EPS	2016 - 2018	FR
KAF	1 000	CGF/CHF Mule Pro DXT EPS LE/Diesel	2016 - 2017	FR
KAF	1 000	DGF/DHF Mule Pro DX/Diesel	2016 - 2017	FR
KAF	1 000	EGF/EHF/EJF Mule Pro DX EPS/Diesel	2016 - 2018	FR
KAF	1 000	FGF/FHF Mule Pro DX EPS LE/Diesel	2016 - 2017	FR

KREIDLER

	125	Supermoto DD	2012 - 2013	FL

LEXMOTO

	125	Adrenaline (XFLM125GY-2B)	2013 - 2018	FL
	125	Michigan (ZS125-79)	2013 - 2018	FL
	125	Milano EFi (FT125T-27-E4)	2016 - 2020	RR

MOTO-ROMA

	125	Road Runner	2004 - 2005	FL

PUZEY

MTD	300	(4T/4V) (Motard model)	2011 - 2012	FL
MX	300	(4T/4V) (Enduro model)	2011 - 2012	FL

QUADZILLA

		Z8 4x4 (Side x Side/800cc)	2014 - 2015	FL
	170	Stingr R E	2006 - 2006	RR
RAM	170	R	2003 - 2005	RR
RAM	170	R Stinger E	2003 - 2005	RR
ST	200	E (Automatic)	2006 - 2006	RR
RAM	250	R	2003 - 2005	RR
RAM	250	R Stinger E	2003 - 2005	RR

SINNIS

		Apache (Rear drum models)	2009 - 2010	FL
	125	Apache SM	2015 - 2020	FL
	125	Apache SMR	2017 - 2020	FL
	125	Blade QM GY-2B	2008 - 2010	FL
	125	Blade X	2015 - 2020	FL
QM	125	GY-2B Blade	2009 - 2014	FL
QM	125	GY-2B(A) Apache (Rear disc model)	2009 - 2014	FL
QM	250	GY-D Apache 250	2013 - 2014	FL

SUPERBYKE

RMR	125		2007 - 2009	FL

SUZUKI

EN	125	-2/125-2A	2005 - 2005	FL
RM	125	H	1987 - 1987	FL
RM	125	J	1988 - 1988	FL
RM	125	K/L/M	1989 - 1991	FL
RM	125	N/P/R/S	1992 - 1995	FL
TS	125	RK/RL/RM/RN/RP/RR	1990 - 1996	FL
TS	200	RK/RL/RM/RN/RP/RR	1989 - 1994	FL
DR	250	SL/SM/SN/SEP/SER/SES (SJ44A)	1990 - 1995	FL
RM	250	H/J	1987 - 1988	FL
RM	250	K/L	1989 - 1990	FL
RM	250	N/P/R/S	1992 - 1995	FL
RMX	250	K/M/N/P	1989 - 1993	FL
RMX	250	R/S	1994 - 1995	FL
RMX	250	SN/SR/SS (SJ13A)	1995 - 1997	FL FR

AD | K1 | K5 | K5-LX | S3 | S33 RACING

PART NUMBER

002

LT-F	300	FK2	2002 - 2002	FR
DR	350	S, SH, SL, SM, SN, SP, SR, SE (SK42B/F418)	1990 - 1996	FL
DR	350	SER/SES (Electric Start / 4 Bolt Front Disc)	1994 - 1995	FL
DR	350	SET/SEV (Electric Start / 4 Bolt Front Disc)	1996 - 1997	FL
DR	350	SL/SM/SN/SP (4 bolt front disc / kick start)	1990 - 1993	FL
LT-R	450	K6/K7/K8/K9/L0/L1	2006 - 2012	FR
LT-A	500	FY/FK1 Quadmaster	2000 - 2001	FR
LT-F	500	FW/FX/FY/FK1/FK2	1998 - 2002	FR
TRIUMPH				
	750	Trident	1992 - 1998	FL
	900	Tiger (T400/G427)	1993 - 1998	FL
	900	Tiger (T400/G427)	1993 - 1998	RR
	900	Trident	1992 - 1998	FL
	900	Trophy (3cyl) (up to VIN 9082)	1992 - 1993	FL
	1 200	Trophy (4cyl) (up to VIN 4901)	1992 - 1993	FL
YAMAHA				
FZR	50		1992 - 1992	FL
YXR	66	FAS/FAT Rhino 4x4 Side x Side	2004 - 2005	FR
WR	125		1991 - 1997	FL
XTZ	125	(5RM)	2003 - 2010	FL
XTZ	125	K/E	2005 - 2010	FL
YZ	125	A/B	1990 - 1991	FL
YZ	125	D/E/F/G/H/J	1992 - 1997	FL
YZ	125	R	1991 - 1991	FL
YZ	125	W	1989 - 1989	FL
DT	200	WR (3XP)	1992 - 1993	FL
WR	200	D/E/F	1992 - 1994	FL
DT	230	(4TP1/2) Lanza	1997 - 1998	FL
TT	250	R (4GY) Raid / 4MR2	1996 - 1996	FL
TT	250	R (4GY1 Japan)	1993 - 1994	FL
TT	250	R (4GY3/4GY5/4WA1) Raid	1994 - 1996	FL
TT	250	R (4RR1/2 Japan)	1995 - 1997	FL
TT	250	RL (4PX5)	1999 - 1999	FL
TT	250	RL/RM/RN/RP/RR/RS	1999 - 2004	FL
TT	250	RM (4PX6)	2000 - 2000	FL
WR	250	ZB	1991 - 1991	FL
WR	250	ZD/ZE/ZF/ZG/ZH/ZJ	1992 - 1997	FL
XTZ	250	Lander (Brasil) (4B41/2)	2007 - 2008	FL
XTZ	250	Lander (Brasil) (4B43)	2009 - 2009	FL
YZ	250	A/WRA/B	1990 - 1991	FL
YZ	250	D/E/F/G/H/J	1992 - 1997	FL
YZ	250	W/WRW	1989 - 1989	FL
YFZ	450	R	2011 - 2014	FR
YFZ	450	RSEA/RSEB/RSED/RSE	2011 - 2014	FR
YFZ	450	RY/RZ (Quad)	2009 - 2010	FR
YFZ	450	S/T	2004 - 2005	FR
YFZ	450	V/W/X	2006 - 2008	FR
WR	500	ZD	1992 - 1992	FL
YFM	700	RD Raptor	2013 - 2013	FR
YFM	700	RE	2013 - 2014	FR
YFM	700	RSE	2013 - 2018	FR
YFM	700	RV/RW/RX/RY/RA/RB Raptor	2006 - 2012	FR
YXR	700	FA/FB/FD Rhino Side x Side	2011 - 2013	FR RR
YXR	700	Rhino 4x4 SE	2009 - 2009	FR RR
XTZ	750	Super Tenere (3WM/F343)	1989 - 1995	FR

EQUIVALENTS OEM

43082 0082	43082 0087	43082 0100	43082 1089	43082 1093	43082 1117	43082 1129
59100 39850	59300 08810	59300 26830	59300 27830	59300 27810	59300 27850	59300 27860
3JD W0045 00	3SP W0045 00	3XP W0045 00	4EW W0045 00	4EW W0045 01	4GY W0045 01	4MX W0045 00
4TP W0045 00	5B4 W045 10	5GF W0045 00	800070888	800071450	59100 09840	59100 09850
59100 09870	59100 09890	IS3 W0045 00	5RM W0045 10	800070858	903 08 08 70	903 08 08 80
715500336	71550036	1XD 25806 10	43082 0146	9060 080910	70300 81420	

PART NUMBER

003

AD	K1	K5	K5-LX	S3	S33 RACING

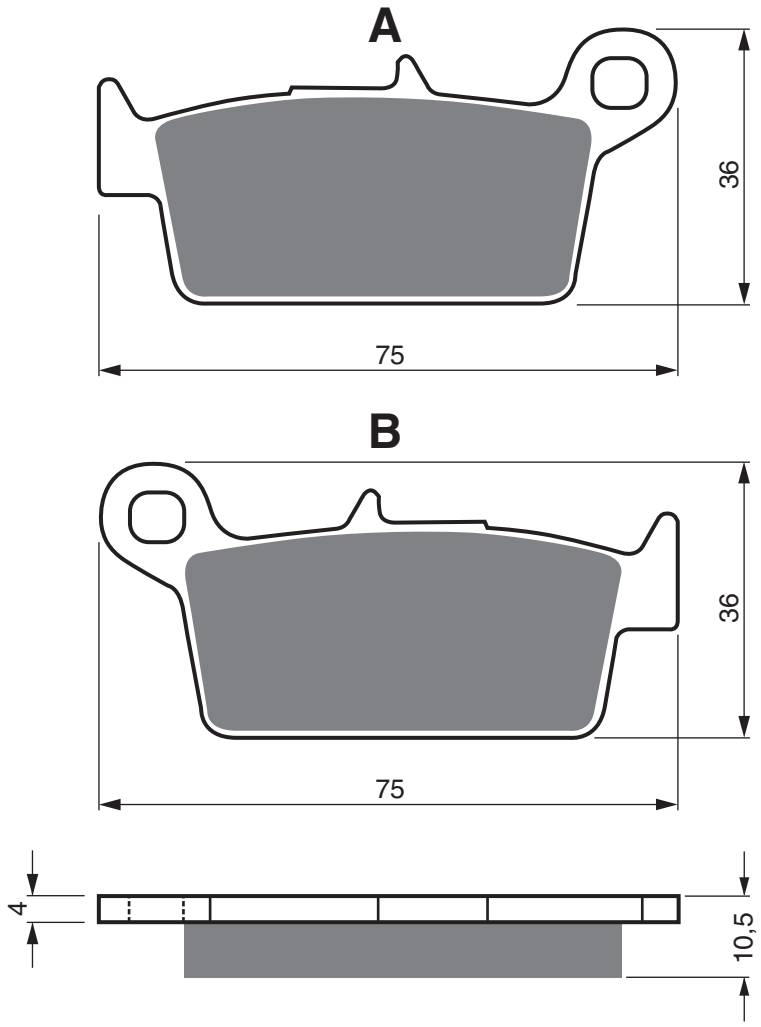

AJP				
PR5	250	Enduro	2009 - 2009	RR
PR5	250	Supermoto	2009 - 2009	RR
CPI				
	125	Sauel		RR
GAS GAS				
	125	Pampera (2T)	2005 - 2008	RR
	125	Trail Halley	2009 - 2009	RR
EC	125	(2T)	2000 - 2008	RR
MX	125	(MC)	2001 - 2008	RR
SM	125	(2T)	2001 - 2006	RR
SM	125	(2T) Supermotard	2003 - 2006	RR
SM	125	FSE	2002 - 2002	RR
SM	125	Halley	2009 - 2009	RR
EC	200	(2T)	2000 - 2008	RR
MX	200		1999 - 2000	RR
EC	250	(2T)	2000 - 2008	RR
MX	250		1999 - 2000	RR
MX	250	(MC)	2001 - 2008	RR
SM	250	(2T)	2001 - 2006	RR
SM	250	FSE	2002 - 2002	RR
EC	300	(2T)	2000 - 2008	RR
MX	300		1999 - 2000	RR
	400	Pampera	2006 - 2006	RR
SM	400	FSE	2002 - 2002	RR
SM	400	FSE (2T)	2001 - 2002	RR
	450	Pampera (4T)	2007 - 2008	RR
EC	450	FSE Enduro (4T)	2005 - 2009	RR
EC	450	FSR Enduro (4T)	2005 - 2009	RR
SM	450	FSR (4T) Supermotard	2007 - 2009	RR
SM	450	Halley	2009 - 2009	RR
SM	450	Trail Halley	2009 - 2009	RR
EC	515	FSE Enduro (4T)	2005 - 2009	RR
EC	515	FSR Enduro (4T)	2005 - 2009	RR
SM	515	FSR (4T) Supermotard	2007 - 2009	RR
GOES				
G	125	XM	2008 - 2009	RR
G	250	XM	2008 - 2009	RR
HM				
CRE	80		1998 - 2002	RR
CR	85	R/R2	2003 - 2007	RR
CRE	125		1995 - 2001	RR
CRF	150	R	2007 - 2009	FL
HONDA				
CB	50	V/W Dream 50	1997 - 1998	RR
XR	50	M5 (AD14) Motard	2005 - 2005	RR
CR	80	RN/RP/RR/RS/RT/RBT/RV/RBV/RW/RBW/RX/RBX/RY/RBY/R1/ RB1/R2/RB2	1992 - 2002	RR
CR	85	R3/RB3/R4/RB4/R5/RB5/R6/RB6/R7/RB7	2003 - 2007	RR
XR	100	M5 (HD13) Motard	2005 - 2005	RR
CR	125	RH/RJ/RK/RL/RM/RN/RP/RR	1987 - 1994	RR
CR	125	RS/RT/RV	1995 - 1997	RR
CR	125	RW/RX/RY/R1	1998 - 2001	RR
CRF	230	L	2008 - 2010	RR
CRF	230	M (Supermoto)	2009 - 2010	RR
SL	230	Free Landsports (MD33)V/W/X/1	1997 - 2001	RR

AD	K1	K5	K5-LX	S3	S33 RACING

PART NUMBER

003

CR	250	RH/RJ/RK/RL/RM	1987 - 1991	RR
CR	250	RN/RP/RR	1992 - 1994	RR
CR	250	RS/RT/RV/RW/RX/RY/R1	1995 - 2001	RR
CRM	250	ARV/ARW Active Radial (MD32)	1997 - 1998	RR
CRM	250	R (RM) MK2/MD24 (1200001-1211634)	1991 - 1992	RR
CRM	250	R (RP-RP-II) MK2/2 MD24 (1300001-)	1993 - 1993	RR
CRM	250	RR/RRII (MD24 140) (MK3)	1994 - 1996	RR
XL	250	RL	1990 - 1990	RR
XLR	250	RM/R3N/RP/RR/R3R (MD22)	1991 - 1997	RR
XR	250	3/5 (MD30) Motard	2003 - 2005	RR
XR	250	III Y/3 Baja	2000 - 2003	RR
XR	250	RJ/RK/RL	1988 - 1990	RR
XR	250	RM/RN/RP/RR/RS	1991 - 1995	RR
XR	250	RT/RV/RW/RX/RY/R1/R2/R3/R4	1996 - 2004	RR
XR	250	Y/3 (MD30)	2000 - 2003	RR
XR	300	R10	2010 - 2010	RR
NX4	400	Falcon	2002 - 2005	RR
XR	400	M (ND08/NC38E) Supermotard	2006 - 2008	RR
XR	400	RT/RV/RW/RX/RY/R1/R2/R3/R4	1996 - 2005	RR
CR	500	RH/RJ/RK/RLR/RM/RN/RP/RR	1987 - 1994	RR
CR	500	RS/RT/RV/RW/RX/RY/R1	1995 - 2001	RR
XR	600	RM/RN	1991 - 1992	RR
XR	600	RP/RR/RS/RT/RV/RW/RX/RY	1993 - 2000	RR
XR	650	L	1993 - 2020	RR
XR	650	RY/R1-R7	2000 - 2007	RR
HONDA DALL'ARA				
XR	250	R	2004 - 2004	RR
XR	650	R	2004 - 2004	RR
KAWASAKI				
KX	125	/250/500 Supermotard with 320mm disc	2003 - 2005	RR
KX	125	K2/K3/K4/K5	1995 - 1999	RR
KX	125	L1/L2/L3/L4	1999 - 2002	RR
KX	125	M1/M2/M3	2003 - 2005	RR
KX	125	M6F/M7F/M8F	2006 - 2008	RR
KLX	250	J1-J6 D-Tracker	1998 - 2003	RR
KLX	250	S H6F/H7F	2006 - 2007	RR
KLX	250	SF	2009 - 2020	RR
KX	250	K2-K5	1995 - 1998	RR
KX	250	L1/L2/L3/L4	1999 - 2002	RR
KX	250	M1/M2/R1 (2T)	2003 - 2005	RR
KX	250	R6F/R7F/R8F (2T)	2006 - 2008	RR
KLX	300	A2/A3/A4/A5/A6/A7/A8/A9/A10/A6F/A7F	1997 - 2007	RR
KLX	300	R	2019 - 2020	RR
KLX	400	R (KLX 400 B1/B2)	2003 - 2004	RR
KX	500	E8-A16	1996 - 2004	RR
KLX	650	R D1 (KLX650C/G245)	1996 - 2000	RR
KYMCO				
	50	Cobra Cross	1999 - 2000	FL
	90	Manboy	1996 - 1996	FL
	125	Super-9	2000 - 2000	FL
SUZUKI				
DR	125	SMK8/SMK9/SML0	2008 - 2012	RR
RM	125	K5-K9	2005 - 2012	RR
RM	125	T/V/W/X/Y/K1-K4	1996 - 2004	RR
RM	125	XCK8	2009 - 2009	RR
RM	250	K5/K6/K7/K8	2005 - 2008	RR
RM	250	T/V/W/X/K1-K9	1996 - 2012	RR
RM	250	XCK8	2009 - 2009	RR
RMX	250	ST/SV/SW/SX (SJ14A)	1996 - 1999	RR
SBK2	250	(LX 250 L)	2002 - 2002	RR
DR-Z	400	SEY/EY/Y/SEK1/EK1/K2/SEK2/EK2/K3/SEK3/EK3/K4/SEK4/EK4/ EK5/SK5/SK6/K6/SK7/K7/EK7/SK8/SK9	2000 - 2009	RR
DR-Z	400	SMK5/SMK6/SMK7/SMK8/SMK9	2005 - 2009	RR
TM				
MX	85		2006 - 2012	RR
MX	85	(Big Wheel)	2002 - 2004	RR
MX	85	JR	2002 - 2004	RR
EN	125	Enduro (2T)	2001 - 2004	RR
MX	125	(2T)	2001 - 2004	RR
EN	250	Enduro (2T)	2001 - 2004	RR
EN	250	F Enduro (4T)	2004 - 2004	RR
MX	250	(2T)	2001 - 2004	RR
MX	250	(4T)	2002 - 2004	RR
SM	250		2002 - 2002	RR
SME	250	(4T)	2004 - 2004	RR
SME	250	(4T)	2006 - 2006	RR
EN	300	Enduro (2T)	2001 - 2004	RR
MX	300	(2T)	2001 - 2004	RR
MX	400	Cross (4T)	2002 - 2003	RR
SM	400		2002 - 2003	RR
SME	400	(4T)	2004 - 2004	RR
EN	450	F (4T)	2004 - 2004	RR
MX	450	F	2004 - 2004	RR
	530	(4T) Cross	2002 - 2003	RR
EN	530	F (4T)	2004 - 2004	RR
SM	530		2002 - 2003	RR
SME	530	(4T)	2004 - 2004	RR
SMX	600	F	2003 - 2003	RR
YAMAHA				
WR	125		1998 - 2001	RR
YZ	125		2001 - 2001	RR
YZ	125	K/L/M (2T)	1998 - 2000	RR
YZ	125	N/P (2T)	2001 - 2002	RR
WR	250	FN/FP (4T)	2001 - 2002	RR
WR	250	ZK	1998 - 1998	RR
YZ	250		2001 - 2001	RR
YZ	250		2002 - 2002	RR
YZ	250	FN/FP (4T)	2001 - 2002	RR
YZ	250	K/L/M/N/P	1998 - 2002	RR
WR	400	FL/FM	1999 - 2000	RR
WR	400	FN	2001 - 2001	RR
YZ	400	FL	1999 - 1999	RR
WR	426	FN/FP	2001 - 2002	RR
YZ	426	FM/FN/FP	2000 - 2002	RR

EQUIVALENTS OEM

06435 KCZ 000	06455 6CK 006	43082 0090	43082 1228	43105 GT4 004A	43105 GW2 004A	43105 KS6 701A
43105 KS6 702A	43105 KZ1 405	43105 MY6 415	43106 GT4 004B	43106 GW2 004B	43106 KS6 701B	43106 KS6 702B
43082 1173	5DH WD0046 00	5ET W0046 00	5GR W0046 00	69100 36820	69100 36830	69100 36840
69100 36850	69100 36860	69100 36870	43082 1267	5MV W0046 00	43082 5010	43082 5012
43082 1292	69100 37810	BE2500 22068	69400 37820	69100 37830	69095	69096
00TRS01A0075						

PART NUMBER

004

AD	K1	K5	K5-LX	S3	S33 RACING

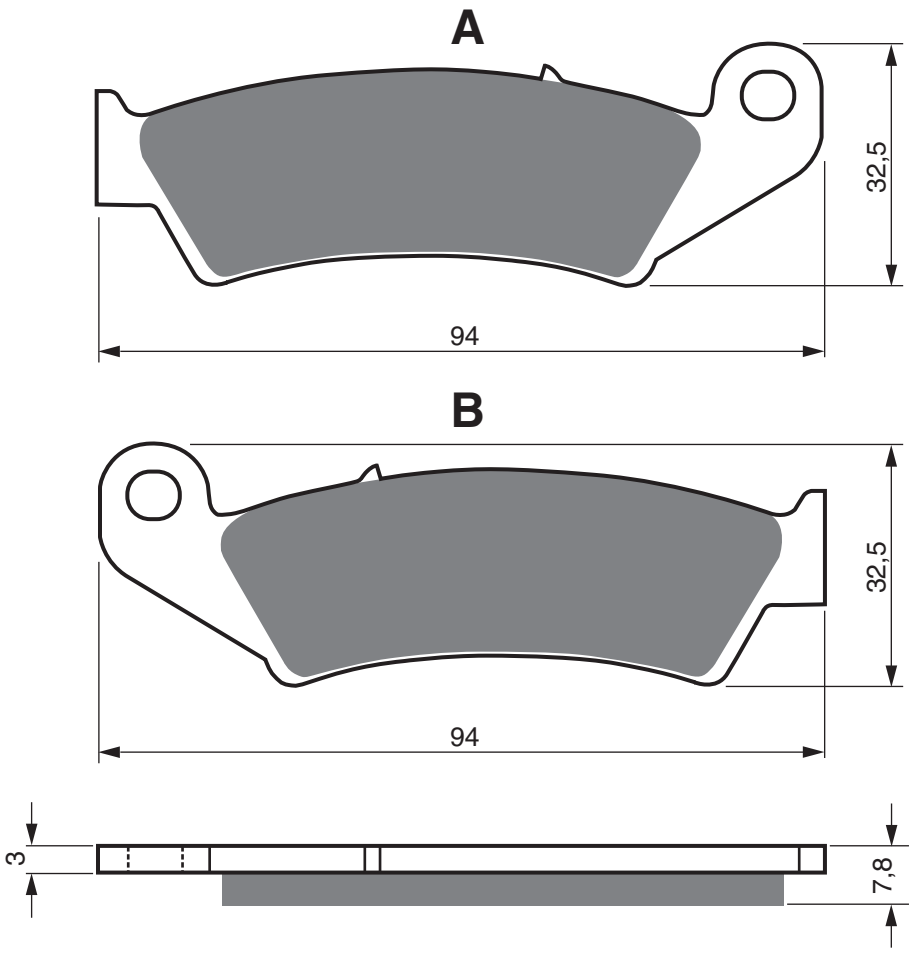

HONDA

CRM	50	RN/RP/RR/RT	1993 - 1996	FL
CRM	75	RK/RL/RM/RP/RR	1989 - 1994	FL
CR	125	RH/RJ/RK/RL/RM/RN/RP/RR	1987 - 1994	FL
AX-1	250	(NX 250 J/K/R/R3)	1989 - 1994	FL
CR	250	RH/RJ/RK/RL/RM	1987 - 1991	FL
CR	250	RN/RP/RR	1992 - 1994	FL
CRM	250	R (RK) MK1/MD24 (100001-1008385)	1989 - 1990	FL
CRM	250	R (RM) MK2/MD24 (1200001-1211634)	1991 - 1992	FL
CRM	250	R (RP-RP-II) MK2/2 MD24 (1300001-)	1993 - 1993	FL
NX	250	2L/M/P/2P (MD25)	1990 - 1993	FL
NX	250	J/K (MD21)	1987 - 1990	FL
TRX	250	RG/RH/RJ/RK	1986 - 1989	FL FR
XL	250	RL	1990 - 1990	FL
XR	250	RJ/RK/RL	1988 - 1990	FL
XR	250	RM/RN/RP/RR/RS	1991 - 1995	FL
CR	500	RH/RJ/RK/RLR/RM/RN/RP/RR	1987 - 1994	FL
XR	600	RJ/RK/RL	1988 - 1990	FL
XR	600	RM/RN	1991 - 1992	FL

EQUIVALENTS OEM

45105 HA5 671A	45105 HA5 672A	45105 HA5 672B	45105 KS6 831A	45105 KT0 405	45105 KZ1 405	45105 KW3 405
45105 KW3 681	45105 KY7 008	45106 HA5 671B	45106 HA5 672B	45106 KS6 701A	45106 KS6 701B	45106 KS6 831B
45106 KY7 008	45106 KW3 681	451A0 HB9 670				

AD	K1	K5	K5-LX	S3	S33 RACING

PART NUMBER

005

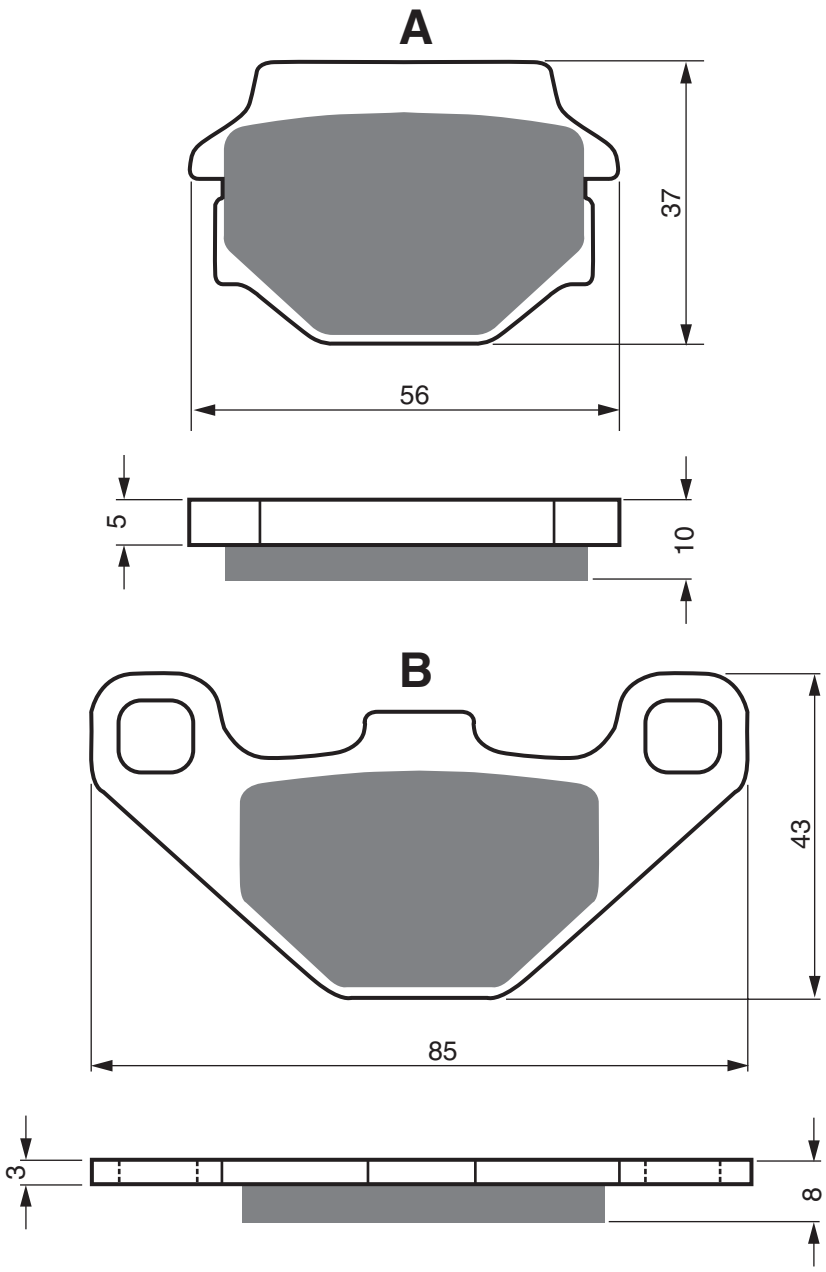

AEON

	125	Elite (4T)	2012 - 2013	RR		
	125	MY		RR		
	125	Urban (4T)	2012 - 2013	RR		
	220	Cobra (Quad)	2006 - 2011	RR		
	300	Cobra S	2012 - 2015	RR		
	300	Cube (Side x Side)	2011 - 2011	RR		
	300	Overland (AT20) (Quad)	2006 - 2007	RR		
	350	Cobra (Quad)	2010 - 2011	RR		
	350	Cube (Side x Side)	2013 - 2015	RR		
	400	Cobra (Quad)	2010 - 2015	RR		
	400	Cobra Supermoto (Quad)	2013 - 2015	RR		
	600	Overland (Quad)	2010 - 2011	RR		

ALFER

AR	250		1993 - 1993	RR		

APACHE

F	100			FL	RR	
ZX	100			RR		
RLX	250	S/SX (Mk1) Rear disc model		FL	FR	
RLX	320	S		FL	FR	RR
RLX	320	Utility		FL	FR	RR
RLX	450	S		FL	FR	RR

APRILIA

RX	125	(Brembo Front & Grimeca Rear Caliper)	2008 - 2012	RR		
SX	125	(Grimeca Caliper)	2008 - 2013	RR		

BAROSSA QUADS

	170	Cheetah	2003 - 2006	RR		
	250	Cheetah	2003 - 2006	RR		

CAGIVA

WMX	125		1989 - 1989	RR		
WMX	250		1989 - 1989	RR		

CECTEK

	500	EFI Gladiator	2009 - 2010	RL	RR	
	500	EFI King Cobra	2009 - 2010	RL	RR	
	500	EFII Quadrift	2009 - 2010	RL	RR	
	500	i Estoc	2010 - 2010	RL	RR	

PART NUMBER

005

AD | K1 | K5 | K5-LX | S3 | S33 RACING

CF MOTO						
CF	800	UU-AA U- Force (Side x Side)	2014 - 2016	RL	RR	
DERBI						
DXR	200	Quad (Front Disc Model)	2004 - 2007	RR		
DXR	200	Quad (Front Drum Model)	2004 - 2005	RR		
DXR	250	Quad (From Disc Model)	2004 - 2007	RR		
DINLI						
DL	450	RS (DL901)	2006 - 2009	FL	FR	RR
EXPLORER						
	450	Trasher	2008 - 2009	FL	FR	RR
GOES						
G	225	S	2012 - 2013	RR		
G	350	S (Quad)	2008 - 2014	RR		
GOGORO						
		Smart Scooter (Electric)	2015 - 2017	RR		
HUSABERG						
		All models (Central fixing pin in pad)	1989 - 1992	RR		
		All Models (Fixing Pin at end of Brake Pad)	1993 - 1994	RR		
KAWASAKI						
KSR1	50	(KMX50 B1/B2)	1990 - 1991	RR		
KSR II	80	(KMX 80 B1/B2)	1990 - 1991	RR		
KH	100	G4	1983 - 1983	FL		
KH	100	G5-G8 (EX)	1984 - 1987	FL		
AR	125	A1-A7/B1-B8	1982 - 1994	FL		
KH	125	K2-K10	1982 - 1998	FL		
KH	125	L1 (EX)	1984 - 1984	FL		
KMX	125	A1-A5/B1-B9	1986 - 1998	RR		
KMX	125	B2-B12 (From E/No MX AE 013437)	1987 - 2003	RR		
KX	125	B2/C1/D1	1983 - 1985	FL		
KX	125	E1	1986 - 1986	FL		
KX	125	E1	1986 - 1986	RR		
KX	125	E2/F1	1987 - 1988	RR		
KDX	200	C1/C2/C3	1986 - 1988	FL		
KDX	200	E1/E2/E3/E4	1989 - 1992	FL		
KMX	200	A2/A3	1988 - 1992	RR		
Z	200	A6	1983 - 1983	FL		
BJ	250	B1-B7A Estrella	1992 - 1999	FL	RR	
BJ	250	C1-C7 Estrella RS	1999 - 2002	FL	RR	
GPZ	250	Belt Drive (KZ250A/C/B039)	1983 - 1984	FL		
KL	250	G1/G1A Super Sherpa	1997 - 2000	RR		
KL	250	J1-J3 Stockman	2000 - 2002	RR		
KLR	250	D2-D22	1984 - 2005	FL		
KLX	250	H1 Super Sherpa	1998 - 1998	RR		
KR	250	A1/A2	1984 - 1986	FL	FR	
KX	250	C1/C2/D1	1983 - 1985	FL		
KX	250	D2	1986 - 1986	FL		
KX	250	D2	1986 - 1986	RR		
KX	250	E1/F1	1987 - 1988	RR		
KXT	250	A2 Tecate - 3 Wheel Model	1985 - 1985	FL	RR	
KXT	250	B1 Tecate - 3 Wheel Model	1986 - 1986	FL	RR	
KXT	250	B2 Tecate - 3 Wheel Model	1987 - 1987	FL		
ZR	250	B6 Balius-II	2002 - 2002	RR		
KLF	300	B1-B17 Bayou	1988 - 2004	FL	FR	
GPZ	305	A1/B1-B10	1983 - 1996	FL	FR	
FX	400	(ZX 400 E1-E3)	1986 - 1988	FL	FR	
FX	400	R (ZX 400 E1-E3)	1986 - 1988	FL		
GPZ	400	R (ZX 400 D1/D3/D3A)	1985 - 1987	FL	FR	
Z	400	C2/C3 (Z400 F2)	1985 - 1987	FL	FR	
ZL	400	B Eliminator 400 SE	1988 - 1988	FL	FR	
ZR	400	A1/B1 (Z400 F)	1983 - 1984	FL	FR	
GPZ	500	S (EX500 B1-B5)	1988 - 1993	FL	FR	
GPZ	500	S (EX500 E1-E10)	1994 - 2004	RR		
KX	500	A1/A2/B1	1983 - 1985	FL		
KX	500	B2	1986 - 1986	FL	RR	
KX	500	C1/D1	1987 - 1988	RR		
GT	550	G1-G9	1983 - 2001	FL	FR	
ZR	550	A1/A2 (Z550 F)	1983 - 1984	FL	FR	
KLR	600	A1/B1-B4/B6-B9	1984 - 1994	FL		
KL	650	B1-B3 Tengai	1989 - 1992	RR		
KLR	650	C1-C10	1995 - 2004	RR		
KTM						
MX		125-600 ccm.	1991 - 1992	FL		
D-XC/E-XC/E-GS	125		1990 - 1991	FL	RR	
D-XC/E-XC/E-GS	125	Brembo Calipers	1992 - 1993	RR		
D-XC/E-XC/E-GS	125	Grimeca Calipers	1992 - 1993	RR		
EXC	125	Brembo Calipers	1989 - 1989	FL	RR	
MX	125	Brembo Calipers	1992 - 1993	RR		
MX	125	Brembo Calipers	1989 - 1991	FL	RR	
MX	125	Grimeca Calipers	1992 - 1993	RR		
D-XC/E-XC/E-GS	250	Brembo Calipers	1991 - 1991	FL	RR	
D-XC/E-XC/E-GS	250	Grimeca Calipers	1992 - 1993	RR		
EXC/EGS	250	Brembo Calipers	1989 - 1989	FL	RR	
MX	250	Brembo Calipers	1989 - 1991	FL	RR	
MX	250	Brembo Calipers	1992 - 1993	RR		
MX	300		1990 - 1990	FL		
DXC/EXC/EGS	350	(Brembo Calipers)	1990 - 1991	FL	RR	
EXC	350	Brembo Calipers	1989 - 1989	FL	RR	
LC4	350		1992 - 1992	FL		
MX	350	Brembo Calipers	1989 - 1991	FL	RR	
LC-4	500	EXC (Brembo Calipers)	1990 - 1991	FL	RR	
LC-4	500	MX (Brembo Calipers)	1990 - 1991	FL	RR	
MX	500		1992 - 1994	RR		
LC-4 EXC	600		1992 - 1993	RL		
LC-4 MX/EXC	600		1989 - 1991	RL		
LC4	600		1988 - 1989	FL	RR	
LC4	600	Enduro	1990 - 1992	RR		
LC4	600	EXC	1992 - 1993	RR		
LC4	600	EXC (Brembo Calipers)	1990 - 1991	FL	RR	
LC4	600	MX (Brembo Calipers)	1990 - 1991	FL	RR	
LC4	600	Six Days	1992 - 1992	RR		
SX	620	/EXC/EGS	1994 - 1994	RR		
KYMCO						
	50	Visa R	2011 - 2015	FL		
	110	Visa R	2011 - 2015	FL		
	125	Agility (C20000) (16" wheels)	2008 - 2015	RR		
	125	Agility City	2018 - 2020	RR		
	125	Agility City+	2018 - 2020	RR		
	125	Visa R	2011 - 2015	FL		
LAVERDA						
	700	El Cid	1990 - 1990	FL		
LINHAI						
ATV	80		2013 - 2013	RR		
ATV	150		2013 - 2013	RR		
MAICO						
MX	500		1994 - 1998	RR		
P.B.H.						
	500		1992 - 1992	RR		
	560		1992 - 1992	FL	RR	
PEUGEOT						
	125	Citystar Blue Line (AC/Carb)	2015 - 2015	RR		
	125	Django Allure (4T / 190mm Rear Disc)	2014 - 2020	RR		
	125	Django Allure SBC (4T /190mm Rear Disc)	2014 - 2020	RR		

AD	K1	K5	K5-LX	S3	S33 RACING

PART NUMBER

005

	125	Django Evasion (4T/ 190mm Rear Disc)	2014 - 2020	RR		
	125	Django Evasion SBC (4T/ 190mm Rear Disc)	2014 - 2020	RR		
	125	Django Heritage SBC (4T/190mm Rear Disc)	2014 - 2020	RR		
	125	Django S (4T/190mm Rear Disc)	2014 - 2020	RR		
	125	Django Sport (4T/ 190mm Rear Disc)	2014 - 2020	RR		
	125	Django Sport SBC (4T/190mm Rear Disc)	2014 - 2020	RR		
	150	Django Allure (4T/ 190mm Rear Disc)	2014 - 2018	RR		
	150	Django Evasion (4T/190mm Rear Disc)	2014 - 2019	RR		
	150	Django Sport (4T/ 190mm Rear Disc)	2014 - 2019	RR		
POLARIS						
	200	Phoenix Quadricycle Model (EA/EB/Rear Disc Model)	2005 - 2005	RR		
	200	Phoenix Quadricycle Model (EC/ED Models / Rear Disc Model)	2005 - 2009	RR		
	200	Phoenix Quadricycle Model (Rear disc Model)	2010 - 2010	RR		
	200	Sawtooth Quadricycle (Rear Disc Model)	2006 - 2006	RR		
	200	Sawtooth Quadricycle (Rear Disc Model)	2008 - 2008	RR		
QUADZILLA						
RS7		4WD	2010 - 2011	RR		
RS8			2010 - 2011	RR		
X7R			2010 - 2011	RR		
	100	Pro Shark RMX (Front Disc Models)	2007 - 2007	FL	FR	
	200	4 Cross E SUV	2006 - 2007	RR		
QZ	200	(Front disc model)		FL	FR	RR
RMX	200	Pro Shark	2007 - 2008	FL	FR	
ST	200	E (5 Speed Manual)	2006 - 2007	RR		
	250	e	2006 - 2011	FL	FR	RR
	250	Stinger R E	2006 - 2006	RR		
QZ	250	(Front disc model)		FL	FR	RR
QZ	270			FL	FR	RR
	300	E XLC	2006 - 2007	RR		
	300	Jow	2007 - 2008	FL	FR	RR
	300	SE 4 Valve	2006 - 2007	RR		
	300	Stinger e	2009 - 2011	FL	RR	
QZ	300	XLC		FL	FR	RR
RL	300	Buggie	2009 - 2011	FL	FR	RR
XLC	300	e Stinger	2007 - 2008	FL	FR	RR
CUV	320			FL	FR	RR
QZ	450	RS	2006 - 2009	FL	FR	RR
QZ	450	Sport	2008 - 2009	FL	FR	RR
XLC	500		2010 - 2015	FL	FR	RR
SUZUKI						
GSXR	50		1987 - 1987	FL		
OR	50	ET	1980 - 1980	FL		
RB	50	H	1987 - 1987	FL		
RG	50	EW		FL		
ZR	50	SKX/SKE/SKH	1983 - 1987	FL		
ZR	50	SLKX	1981 - 1981	FL		
GN	125	ER/EV/EW/EX/EY/EK1 (NF41A)	1994 - 2001	FL		
GN	125	HS (LC6PCJB1 / Chinese production)	2000 - 2010	FL		
GN	125	R/V/W/X/Y/K1 (NF41A)	1994 - 2001	FL		
GS	125	ESR/ESX	1995 - 2000	FL		
GS	125	ESZ	1982 - 1982	FL		
TU	125	X/XTUX/XTX	1999 - 1999	FL		
X4	125			FL		
GSX	250	FXK2/K3/K4/K5 (ZR 250C)	2002 - 2005	RR		
GSX	400	FD	1983 - 1983	FL		
GSX	400	FX/FZ	1981 - 1982	FL		
SYM						
	125	Jet V (4T)	2012 - 2013	FL		
TGB						
	250	Blade/Congo ATV	2006 - 2007	FL	FR	
	325	Blade LE Quad (4x2)	2008 - 2010	RR		
	325	Blade SL Quad (4x2)	2011 - 2012	RR		
	325	Quad Blade (4x2)	2007 - 2011	RR		
	325	Target (4x2)	2009 - 2011	RR		
	400	Target (4x2)	2009 - 2010	RR		
	425	Target (4x4)	2009 - 2011	RR		
	450	Blade SE (4x4)	2010 - 2011	RR		
	460	Blade IRS Target	2012 - 2012	RR		
	460	Blade R Target	2012 - 2012	RR		
	460	Blade SL IRS (4x4)	2012 - 2012	RR		
	500	Target (4x2)	2009 - 2010	RR		
	510	Blade LE	2011 - 2012	RR		
	525	Blade SL 4 x 4	2009 - 2010	RR		
	525	SE (4 x 4)	2009 - 2009	RR		
	525	Target (4x4)	2009 - 2011	RR		
	550	Blade IRS LT	2010 - 2012	RR		
	550	Blade IRS Target (4x4)	2011 - 2012	RR		
	550	Blade LT (4x4)	2010 - 2011	RR		
	550	Blade SE (4x4)	2009 - 2011	RR		
	550	Blade SL (4x4)	2009 - 2010	RR		
VECTRIX						
VT-1			2014 - 2014	RR		
YAMAHA						
YFM	90	RZ/RA/RB/RD Raptor (With Rear Parking Brake)	2010 - 2013	RR		

EQUIVALENTS OEM

43050 1063	43050 1064	43050 1073	43050 1082	43082 1027	43082 1031	43082 1051
43082 1056	43082 1063	43082 1064	43082 1070	43082 1073	43082 1084	43082 1086
43082 1092	43082 1096	43082 1163	43082 1191	43082 1204	43082 120	45105 LFC3 305
45815 RAM 000	45815 RAM 01	59100 33810	59100 33812	59100 33820	59130 26820	59300 04830
59300 04831	59300 26820	59300 33810	59300 36810	59300 36811	59300 36820	59300 36821
59300 36822	59300 36871	59301 39810	59301 39811	59301 39812	59301 33810	545 13209 044
K4308 21204	513506	00Q25001198	890304	1SC F5806 00	43D F5906 01	0453200
0452883	0453201	45120 211 000	PE803444	7030 081520	7030 0855A0	

PART NUMBER

006

AD	K1	K5	S3

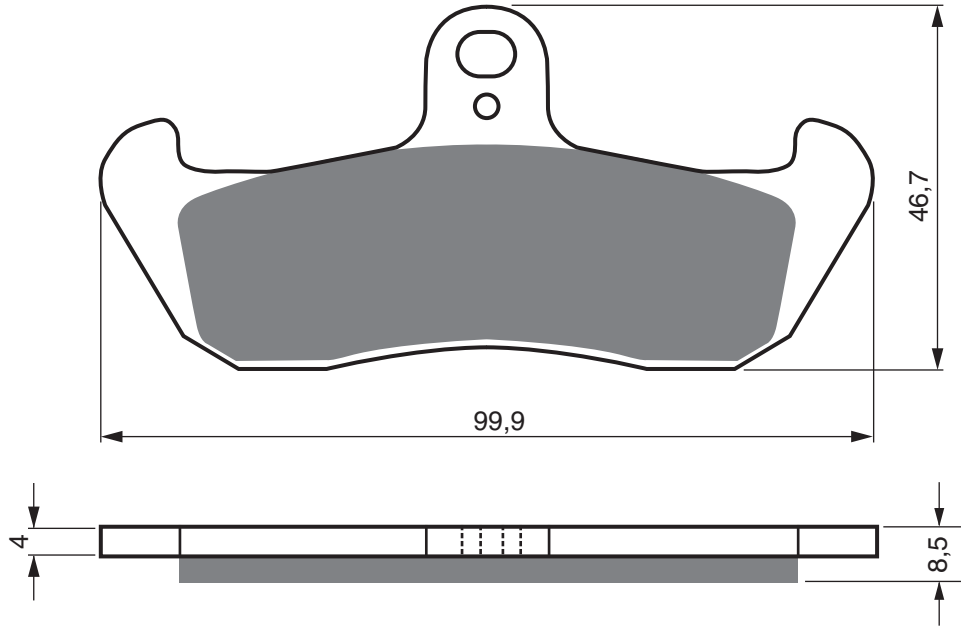

APRILIA

AF1	125		1987 - 1987	FL

CAGIVA

	125	Cruiser	1987 - 1987	FL
WM	125		1987 - 1988	FL
WMX	125		1989 - 1989	FL
WMX	250		1986 - 1989	FL
	501	Excaliber RLX	1992 - 1992	FL
	750	Elefant	1990 - 1992	FL

GILERA

	125	Apache	1991 - 1991	FL
RC	125	Top Rally	1989 - 1992	FL
RC	600		1988 - 1988	FL
RC	600		1989 - 1990	FL

HM

CRE	50	Six/Baja/Derapage (Brembo Caliper / Kayaba Forks)	1995 - 2002	FL

HUSABERG

FE	350	Enduro	1991 - 1994	FL
FE	501	Enduro	1991 - 1994	FL

HUSQVARNA

CR	125		1991 - 1991	FL
WR	125		1987 - 1988	FL
WR	125		1991 - 1991	FL
CR	240		1987 - 1988	FL
WR	240		1987 - 1988	FL
WR	240		1991 - 1991	FL
CR	250		1987 - 1988	FL
CR	250		1991 - 1991	FL
WR	250		1987 - 1988	FL
WR	250		1990 - 1991	FL
XC	250		1987 - 1988	FL
WR	260		1990 - 1991	FL
TE	350		1990 - 1991	FL
WR	400		1987 - 1988	FL
	430	Automatic	1987 - 1988	FL
CR	430		1987 - 1988	FL
WR	430		1987 - 1988	FL
XC	430		1987 - 1988	FL
CR	500		1987 - 1988	FL
XC	500		1987 - 1988	FL
TC	510		1989 - 1990	FL
TE	510		1989 - 1990	FL
WMX	510		1989 - 1989	FL
WXE	510		1989 - 1989	FL
TC	610		1991 - 1991	FL
TE	610		1991 - 1991	FL
SMR	630		2004 - 2004	FL

KRAM-IT

ER	125	/250/300 RV3	1988 - 1988	FL
MC	250		1989 - 1989	FL
ER	300		1989 - 1989	FL
ER	500		1996 - 1996	FL
ER	600		1996 - 1996	FL

MOTO-MORINI

	350	Coguaro		FL
	350	Coguaro, New York	1990 - 1990	FL
	350	Dart	1987 - 1987	FL
	350	Excalibur RLX	1993 - 1993	FL
	400	Dart	1989 - 1989	FL
	501	Coguaro	1989 - 1989	FL
	501	Excalibur RLX	1993 - 1993	FL

YAMAHA

DT	125	Tenere	1989 - 1990	FL
TDR	125	(3HS1/3XD0/3HS3/3XD01)	1989 - 1993	FL
TDR	125	R Lightburner (3SH2/3XE2)	1993 - 1994	FL

ZANELLA

TZ4	125	Patagonia (ARG)	1992 - 1992	FL

EQUIVALENTS OEM

341878	2VW F0047 00	K00946315

AD	K1	K5	K5-LX	S3	S33 RACING

PART NUMBER

007

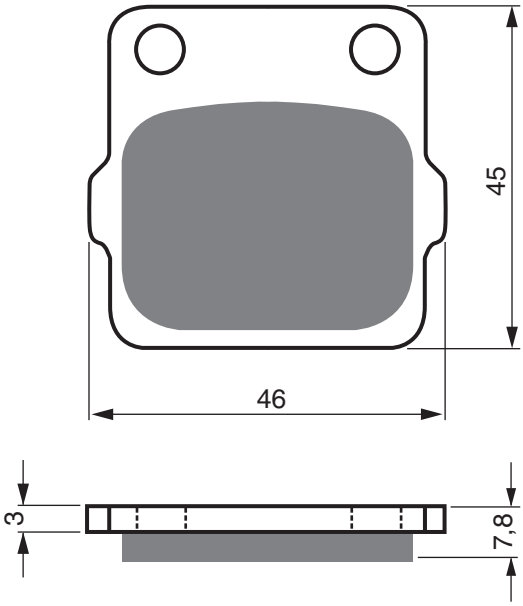

ARCTIC CAT

DVX	400	Sport (2x4)	2004 - 2008	FL	FR
DVX	400	TS Sport	2006 - 2007	FL	FR

HM

CRE	80		1998 - 2002	FL	
CR	85	R/R2	2003 - 2007	FL	
CR	150	R/R2	2007 - 2009	FL	

HONDA

CR	80	RG/RH/RJ/RK/RL/RM	1986 - 1991	FL	
CR	80	RN/RP/RR/RS/RT/RBT/RV/RBV/RW/RBW/RX/RBX/RY/RBY/R1/RB1/R2/RB2	1992 - 2002	FL	
CR	85	R3/RB3/R4/RB4/R5/RB5/R6/RB6/R7/RB7	2003 - 2007	FL	
CRF	150	R Small wheel (FR 17"/RR 14")	2007 - 2020	FL	
CRF	150	RB Big wheel (FR 19"/RR 16")	2007 - 2020	FL	
ATC	200	XD	1983 - 1983	FL	RR
ATC	250	RC	1982 - 1982	FL	
ATC	250	RD	1983 - 1984	FL	RR
TRX	250	EX1/2/3/4/5/6/7/8	2001 - 2008	FL	FR
TRX	250	X9/XA/XB	2009 - 2011	FL	FR
TRX	300	EX 1/2/3/4/5/7/8	2001 - 2008	FL	FR RR
TRX	300	EX P/R/S/T/V/W/X/Y	1993 - 2000	FL	FR RR
TRX	300	X9	2009 - 2009	FL	FR RR
TRX	400	EXX/EXY/EX1-EX8	1999 - 2008	FL	FR RR
TRX	400	X9	2009 - 2009	FL	FR RR
TRX	420	All Models	2014 - 2019	FL	FR
TRX	420	FA9/FAA/FAB Fourtrax Auto 4WD	2009 - 2011	FL	FR
TRX	420	FE7/FE8/FE9FEA/FEB 4WD Fourtrax ES	2007 - 2011	FL	FR
TRX	420	FM7/FM8/FM9/FMA/FMB 4WD Fourtrax	2007 - 2011	FL	FR
TRX	420	FPA9/FPAA/FPBA Fourtrax Auto Power Steering	2009 - 2011	FL	FR
TRX	420	FPM9/FPMA/FPMB Fourtrax 4WW Power Steering	2009 - 2011	FL	FR
TRX	420	TE7/TE8/TE9 Fourtrax ES 2WD	2007 - 2009	FL	FR
TRX	420	TM7/TM8/TM9/TMA/TMB Fourtrax 2WD	2007 - 2011	FL	FR
TRX	500	All Models	2014 - 2019	FL	FR
TRX	500	FAC Fourtrax Foreman AT 2/4WD	2012 - 2012	FL	FR
TRX	500	FEC Fourtrax Foreman ES 2x4 WD	2012 - 2012	FL	FR
TRX	500	FMC Fourtrax Foreman S 2/4WD	2012 - 2012	FL	FR
TRX	500	FPAC Fourtrax Foreman 2/4 WD	2012 - 2012	FL	FR

HUSQVARNA

CR	125		1992 - 1994	RR	
WR	125		1992 - 1994	RR	
CR	250		1992 - 1994	RR	
WR	250		1992 - 1994	RR	
TE	350		1992 - 1994	RR	
CR	360		1992 - 1994	RR	
WR	360		1992 - 1994	RR	
TC	610		1992 - 1994	RR	
TE	610		1992 - 1994	RR	

KAWASAKI

KX	80	L1-L3/N2/N3/R1-R6/T1-T6	1988 - 1996	RR	
KX	80	R7/W1/W2/W3	1997 - 2000	RR	
KX	85	(FR 17"/RR 14")	2001 - 2020	RR	
KX	85	(FR 19"/RR 16")	2001 - 2020	RR	
KX	100	A1/A2/B1/B2/B3	1988 - 1994	RR	
KX	100	B5-B6	1995 - 1996	RR	
KX	100	B7/C1/C2/C3	1997 - 2000	RR	
KSF	250	A1-A18 (KFX 250 Mojave)	1987 - 2004	RR	
KXT	250	B2 Tecate - 3 Wheel Model	1987 - 1987	RR	
KEF	300	B1/B2/B3 Lakota Sport	2001 - 2003	RR	
KSF	400	A1/A2/A3/A6F (KFX400)	2003 - 2006	FL	FR
KFX	450	R Quad (KSF 450 B8F/B9F/BAF/BBF/BCS/BDF/BEF)	2008 - 2014	RR	

PART NUMBER

007

AD	K1	K5	K5-LX	S3	S33 RACING

SUZUKI

RM	100	K3	2003 - 2003	RR		
RM	125	J	1988 - 1988	RR		
LT	230	EH-EP	1986 - 1993	RR		
LT	250	SK, SL	1989 - 1990	RR		
LT-Z	250	K4/K5/K6/K7/K8/K9K/L0 Quadsport	2004 - 2012	FL	FR	
RM	250	H/J	1987 - 1988	RR		
LT-Z	400	K3/K4/K5/K6/K7/K8/K9/L0	2003 - 2010	FL	FR	
LT-Z	400	L1/L2/L3	2011 - 2015	FL	FR	

YAMAHA

YFS	200	R/S/T/V Blaster	2003 - 2006	RR		
YFM	250	R (33B)	2009 - 2011	RR		
YFM	250	R (IBT)	2012 - 2013	RR		
YFM	250	RX/RY Raptor	2008 - 2009	RR		
YZ	250	W	1989 - 1989	RR		
YFM	350	FXG/FXH/FXJ/FXK/FXL/FXM/FXN/FXPFXR/FXS Wolverine	1995 - 2004	RR		
YFM	350	S/T/V/R-WV/RW/RX/RY/RZ Raptor	2004 - 2010	FL	FR	RR
YFM	350	XD/XE/XF/XG/XH/XJ/XK/XL/XM/XN/XP/XR	1992 - 2004	RR		
YFZ	350	A/B/D/E/F/G/H/J/K/L/M/N/P/R/S/T/V Banshee	1990 - 2009	RR		
YFZ	350	T/U/W	1987 - 1989	RR		
YFM	400	FWP Big Bear 4x4	2002 - 2002	FL	FR	
YFZ	450	S/T	2004 - 2005	RR		
YFM	600	FWAK/FWAL/FWAM/FWAN, 4x4 Grizzly	1998 - 2001	FL	FR	
YFM	600	HM "Grizzly Hunting"	2000 - 2000	FL	FR	
YFM	660	FR/FS/FT Grizzly	2003 - 2005	FL	FR	
YFM	660	FWAP/FWAR/FWAS/FWAT/FWAW/FGW/FGX Grizzly	2002 - 2008	FL	FR	
YFM	660	RN/RP/RR/RS Raptor	2001 - 2004	FL	FR	RR

EQUIVALENTS OEM

06435 HA5 405	06435 HA5 670	1UY W0046 00	43082 5006	43082 1205	43106 961 006	45105 961 000
45110 HB7 007	451A0 HB5 670	43082 1066	43082 1082	431A0 HA5 670	43120 HA5 305	43120 HA5 670
69140 19A00	69140 19A01	69140 19A11	69140 19A10	4WV W0045 00	45105 GC4 601	45105 GC4 602/603
45105 GBF 405	45112 GC4 601	45112 GC4 831	06455 GBF J01	5LP W0046 00	5LP W0046 50	K4308 21205
59300 42850	3406 031	3406 032	59300 42860	59300 42870	800070854	800071451
06435 HP5602	06455 KSE 006	06455 KSE 016				

AD	K1	K5	S3

PART NUMBER

008

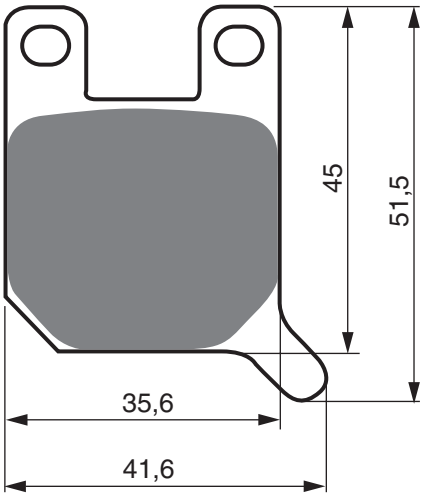

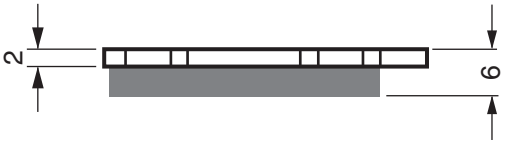

ALFER

MC	80		1987 -		FL

BARIGO

		Scooter electric	1997 - 1997	FL	

BENELLI

BXK	125		1988 - 1988	RR	

GAC

		New T.T.	1987 - 1987	FL	

GARELLI

		Ciclone LC, SM	1986 - 1986	FL	

J. J. COBAS

		Trial	1985 - 1985	FL	
TR1			1985 - 1985	RR	

JCM

	125	Europa	1989 - 1989	FL	RR
	125	SR	1989 - 1989	FL	RR
	240	SR	1989 - 1989	FL	RR
	325	Europa	1989 - 1989	FL	
	325	SR	1989 - 1989	FL	RR

KTM

SX	60		1999 - 1999	FL	
	80	RSL, L, RS, RL, Bora, Chopper	1980 - 1980	FL	RR
PL	80	Watercooled		FL	RR
RLW	80		1980 - 1980	FL	RR
MX	85		1990 - 1990	FL	

MINARELLI

MR	80			FL	

MORBIDELLI

	125	cc		FL	FR RR

PART NUMBER

009

AD	K1	K5	S3	S33 RACING

A

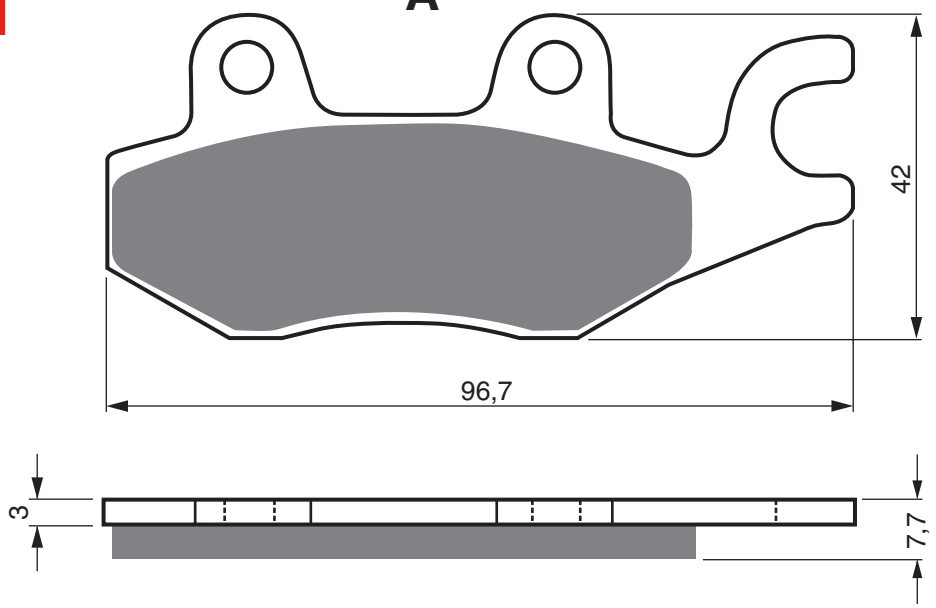

B

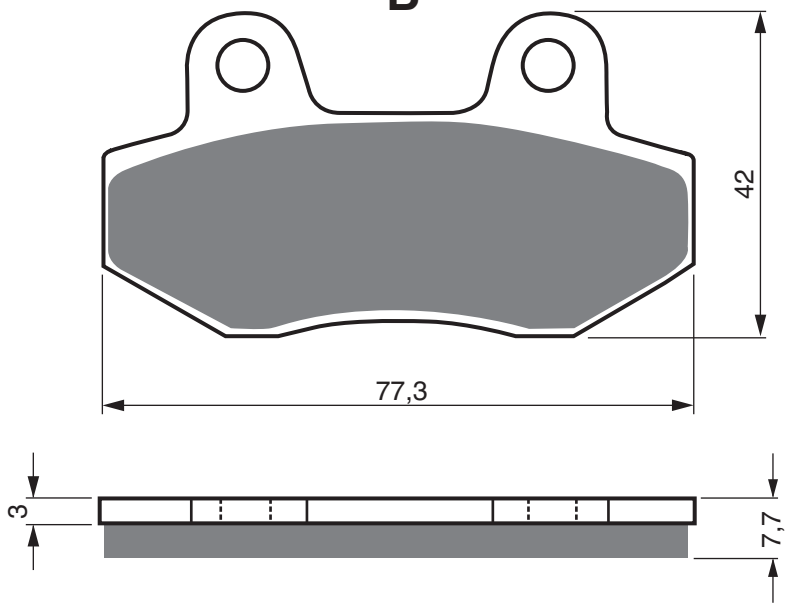

AEON

	125	Overland (AT08) (Quad)	2002 - 2006	RR
	180	Cobra RS (Quad)	2006 - 2006	RR
	180	Overland (AT08) (Quad)	2002 - 2011	RR
	350	Crossland RX	2011 - 2011	RR

APACHE

RLX	150	S		RR

BLANEY (QUADS)

XL	200	Trooper	2003 - 2004	RR

CAN-AM

	800	Commander (XT/DPS)	2011 - 2015	FL
	800	Commander R STD EFI	2011 - 2019	FL
	800	Commander R XT	2011 - 2014	FL
	1 000	Commander (DPS)	2013 - 2015	FL
	1 000	Commander (LTD)	2012 - 2015	FL
	1 000	Commander (STD)	2011 - 2015	FL
	1 000	Commander X	2011 - 2013	FL
	1 000	Commander XT	2011 - 2015	FL
	1 000	Commander XT-P	2014 - 2015	FL
	1 000	Maverick R STD	2014 - 2015	FL
	1 000	Maverick R XMR	2014 - 2015	FL
	1 000	Maverick R XRS	2014 - 2015	FL
	1 000	Maverick R XRS/DPS	2014 - 2015	FL
	1 000	Maverick R XXC	2014 - 2015	FL

CF MOTO

CF	500	-5 (Rancher UTV)	2011 - 2014	FL	
CF	500	US - Z Force 550 (Side x Side)	2015 - 2015	FR	
CF	500	UU-A U-Force (Side x Side)	2015 - 2015	FR	
CF	600	Z Force Z6 (Side x Side)	2013 - 2015	FL	
CF	600	Z Force Z6-EX (Side x Side)	2013 - 2015	FL	
CF	625	-3 (Z6 Terra Cross)	2011 - 2012	FL	RR
CF	800	3 (Tracker 800 Side x Side)	2013 - 2013	FR	
CF	800	UU-AA U- Force (Side x Side)	2014 - 2016	FR	
CF	800	Z Force Z8 (Side x Side)	2013 - 2015	FR	
CF	800	Z Force Z8 - EX (Side x Side)	2014 - 2015	FR	

CPI

XT	50	Quad	2006 - 2009	RR

AD	K1	K5	S3	S33 RACING

PART NUMBER

009

E-TON

CXL	150	Challenger	2003 - 2007	RR	
ELX	150	Eukon ST (Drum front/Disc Rear)	2005 - 2006	RR	
RXL	150	Viper	2005 - 2006	RR	

GOES

G	520	UTX (Side x Side)	2010 - 2011	FL	

JINCHENG

JC	125	2A/3A	1997 - 1997	FL	

JONWAY

YY	125		2008 - 2009	FL	RR
YY	150		2008 - 2009	FL	RR
YY	250	/250 A	2008 - 2009	FL	RR

KAWASAKI

	115	Kazer		FL	
KLF	300	C1-C17 Bayou	1989 - 2005	FL	
KLF	400	B1-B7 Bayou	1993 - 1999	FL	
KVF	650	F7F/F8F Brute Force 4x4i Hardwoods Green	2007 - 2008	FL	
KVF	650	FCF/FSC/FDF/FEF	2012 - 2014	FL	
KVF	650	G7F/G8F Brute Force 4x4i Hardwoods Green	2007 - 2008	FL	
KVF	650	H7F/H8F Brute Force 4x4i	2007 - 2008	FL	
KRF	750	A8F/B8F Teryx 4x4 (RUV)	2008 - 2008	FL	
KRF	750	F8F Teryx 4x4 NRA Outdoors (RUV)	2008 - 2008	FL	
KRF	750	G9F/NAF/NBF/NCS/NDF Teryx 750 Fi 4x4	2009 - 2012	FL	
KRF	750	J9FA/K9F/PAF/RAF/PBF/RBF/RCS/PDF/RDF	2009 - 2013	FL	
KRF	750	L9F Teryx 750 Fi 4x4 LE Sport	2009 - 2009	FL	
KRF	750	LE (RUV) C8F/D8F Teryx 4x4	2008 - 2008	FL	
KRF	750	M9F Teryx 750 Fi 4x4 NRA	2009 - 2009	FL	
KRF	750	SAF/SAFA/SBF/SBFA/SCS/SCSA/SDF Teryx 750 Fi 4x4 Sport LE	2010 - 2013	FL	
KRF	750	TAF/VBP Teryx Fi 4x4 SGO	2010 - 2011	FL	
KRT	750	ACF/ADF (Tyrex 4 750 4x4)	2012 - 2013	FL	
KRT	750	ACFA/ADFA (Tyrex 750 4x4 EPS)	2012 - 2013	FL	
KRT	750	CCF/CDF (Tyrex 4x4 EPS LE)	2012 - 2013	FL	
KVF	750	A1/A6F/B1/B6F Brute Force 4x4	2005 - 2006	FL	
KVF	750	D8F/D9F/DAF/DBF	2008 - 2011	FL	
KVF	750	E8FA Brute Force 4x4 Hardwoods Green HD	2008 - 2008	FL	
KVF	750	GCF/GDF/GEF/GFF/GGF/GHF (Brute Force 7504x4i/EPS)	2012 - 2017	FL	
KVF	750	HCF/HDF/HEF/HFF/HGF/HHF Brute Force 4x4i EPS/Camo	2012 - 2017	FL	
KVF	750	JCF/JDF/JEF/JFF/JGF/JHF Brute Force 4x4i EPS	2012 - 2017	FL	
KVF	750	LCF/LDF/LEF/LFF/LGF/LHF (Brute Force 750 4x4i)	2012 - 2017	FL	
KRF	800	BEF/BFF/FGF/FHF/FJF Teryx	2014 - 2018	FL	
KRF	800	CEF/CFF/GGF/GHF/GJF Teryx LE	2014 - 2018	FL	
KRF	800	DEF/DFF/HGF/HFF/HJF Teryx Camo	2014 - 2018	FL	
KRT	800	BEF/BFF/FGF/FHF/FJF (Teryx 4)	2014 - 2018	FL	
KRT	800	CEF/CFF/GGF/GHF/GJF Teryx 4 LE	2014 - 2018	FL	
KRT	800	DEF/DFF/HGF/HHF/HJF Teryx 4 Camo	2014 - 2018	FL	
KAF	820	AFF/AGF/AHF/AJF Mule Pro FXT	2015 - 2018	FL	
KAF	820	BFF/BGF/BHF/BJF Mule Pro FXT/EPS	2015 - 2018	FL	
KAF	820	CFF/CGF/CHF/CJF Mule Pro FXT /EPS LE	2015 - 2018	FL	
KAF	820	DFF/DGF/DHF/DJF Mule Pro FXT/EPS Camo	2015 - 2018	FL	
KAF	820	EGF/EHF/EJF Mule Pro FX	2016 - 2018	FL	
KAF	820	FGF/FHF/FJF Mule Pro FX/EPS	2016 - 2018	FL	
KAF	820	GGF/GHF/GJF Mule Pro FX/EPS LE	2016 - 2018	FL	
KAF	820	HGF/HHF Mule Pro - FX/EPS Camo	2016 - 2017	FL	
KAF	820	JGF/JHF Mule Pro - FXT Ranch Edition	2016 - 2017	FL	
KAF	1 000	AGF/AHF/AJF Mule Pro DXT/Diesel	2016 - 2018	FL	
KAF	1 000	BGF/BHF/BJF Mule Pro DXT Diesel EPS	2016 - 2018	FL	
KAF	1 000	CGF/CHF Mule Pro DXT EPS LE/Diesel	2016 - 2017	FL	
KAF	1 000	DGF/DHF Mule Pro DX/Diesel	2016 - 2017	FL	
KAF	1 000	EGF/EHF/EJF Mule Pro DX EPS/Diesel	2016 - 2018	FL	
KAF	1 000	FGF/FHF Mule Pro DX EPS LE/Diesel	2016 - 2017	FL	

KYMCO

	50	Dink Sports	2002 - 2006	FL	
	125	Miler	2001 - 2007	FL	RR

MBK

TZR	50	X-Blazer	2000 - 2000	FL	

MOTO-ROMA

	300	Geko Quad	2004 - 2006	RR	

MOTOR UNION

HK	250	Haoke	1997 - 1997	FL	

QUADZILLA

		Z8 4x4 (Side x Side/800cc)	2014 - 2015	FR	
	200	cc 4 Cross		RR	

SINNIS

QM	250	GY-D Apache 250	2013 - 2014	RR	

SUZUKI

LT-F	300	FK2	2002 - 2002	FL	RR
LT-R	450	K6/K7/K8/K9/L0/L1	2006 - 2012	FL	
LT-A	500	FY/FK1 Quadmaster	2000 - 2001	FL	
LT-F	500	FW/FX/FY/FK1/FK2	1998 - 2002	FL	

TAISHAN

	90	Panther QUAD	2004 - 2004	RR	
	125	Hurricane QUAD	2004 - 2004	RR	
	150	Explorer QUAD	2004 - 2004	RR	
	200	Tornado QUAD	2004 - 2004	RR	

TRIUMPH

	750	Trident	1992 - 1998	FR	
	900	Tiger (T400/G427)	1993 - 1998	FR	
	900	Trident	1992 - 1998	FR	
	900	Trophy (3cyl) (up to VIN 9082)	1992 - 1993	FR	
	1 200	Trophy (4cyl) (up to VIN 4901)	1992 - 1993	FR	

YAMAHA

FZR	50		1990 - 1990	FL	
TZM	50		1990 - 1992	FL	
TZM	50	R	1994 - 1994	FL	
TZR	50		1990 - 1992	FL	
TZR	50		1993 - 2002	FL	
YXR	66	FAS/FAT Rhino 4x4 Side x Side	2004 - 2005	FL	
YFZ	450	R	2011 - 2014	FL	
YFZ	450	RSEA/RSEB/RSED/RSE	2011 - 2014	FL	
YFZ	450	RY/RZ (Quad)	2009 - 2010	FL	
YFZ	450	S/T	2004 - 2005	FL	
YFZ	450	V/W/X	2006 - 2008	FL	
YFM	700	RD Raptor	2013 - 2013	FL	
YFM	700	RE	2013 - 2014	FL	
YFM	700	RSE	2013 - 2018	FL	
YFM	700	RV/RW/RX/RY/RA/RB Raptor	2006 - 2012	FL	
YXR	700	FA/FB/FD Rhino Side x Side	2011 - 2013	FL	RL
YXR	700	Rhino 4x4 SE	2009 - 2009	FL	
XTZ	750	Super Tenere (3WM/F343)	1989 - 1995	FL	RR

EQUIVALENTS OEM

43020 CEK 000	43082 0069	43082 0080	43082 1094	3JD W0045 10	59100 09840	7 020 016
IS3 W0046 10	59100 09860	59100 09880	810183	67131 BCAO 0000	5B4 W0045 00	59300 09840
59300 09850	715500325	903 08 08 80	903 08 08 90	71550335	705601150	1XD 25806 00
9060 080810	43082 0138	153 W0045 10	43082 0126	7030 0853A0		

PART NUMBER

010

AD	K1	K5	S3

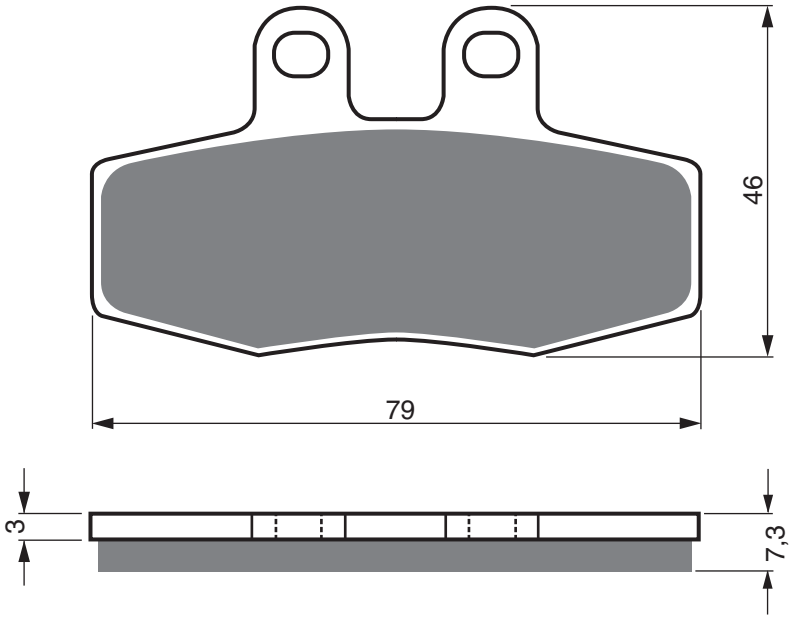

APRILIA

50	Pegaso (2 pads both same shape modficiation A)	1992 - 1994	FL	
125	Red Rose (Cast Wheel)	1987 - 1987	FL	
125	Red Rose (Spoke Wheel)	1988 - 1994	FL	
125	Scarabeo (Piaggio engine)	2003 - 2003	FL	
125	Scarabeo (Rotax engine)	1999 - 2002	FL	
125	Sport City	2004 - 2008	FL	
125	Sport City Cube	2008 - 2012	FL	
125	Tuareg Rally (L/M)	1990 - 1991	FL	
150	Scarabeo	1999 - 2002	FL	
200	Scarabeo	1999 - 2002	FL	
200	Scarabeo	2003 - 2003	FL	
200	Sport City	2004 - 2008	FL	
200	Sport City Cube	2008 - 2009	FL	
250	Leonardo ST/SP	2000 - 2004	FL	
250	Sport City Cube	2008 - 2009	FL	FR
250	Sport City ie	2006 - 2008	FL	FR
300	Leonardo (Grimeca cal.)	2005 - 2006	FL	
300	Sport City Cube	2008 - 2012	FL	FR
300	Sport Cube Blackline	2011 - 2011	FL	FR
400	Scarabeo ie	2007 - 2008	FL	
500	Scarabeo ABS	2003 - 2006	FL	FR
500	Scarabeo ie	2007 - 2009	FL	FR
500	Scarabeo Light	2006 - 2006	FL	FR
850	Mana (ABS)	2008 - 2013	RR	
850	Mana (Non ABS)	2008 - 2011	RR	
850	Mana GT (ABS Model)	2009 - 2016	RR	

CAGIVA

125	Blues	1992 - 1995	FL	
125	Roadster	1998 - 1999	FL	

DERBI

125	Boulevard S	2007 - 2007	FL	
125	Rambla	2008 - 2012	FL	
250	i Rambla	2008 - 2009	FL	
300	i Rambla	2010 - 2012	FR	

FANTIC

250	Raider	1985 - 1986	FL	

GARELLI

125	Tiger XLE	1986 - 1986	FL	

GILERA

125	Cougar	1999 - 2002	FL	
125	XR1/XR2	1989 - 1989	FL	
RC 125	Rally	1987 - 1988	FL	
200	Arizona Hawk	1985 - 1985	FL	
200	Fast Bike	1987 - 1987	FL	
ER 200		1987 - 1987	FL	
RTX 200		1985 - 1985	FL	
RV 200	ES	1987 - 1987	FL	
RC 250	Rally	1987 - 1987	FL	
350	Dakota	1985 - 1985	FL	
ER 350		1987 - 1987	FL	
XRT 350		1990 - 1990	FL	
500	Dakota	1987 - 1987	FL	
XRT 600		1988 - 1988	FL	

HONDA

SJ 50	P/R/S/T/V/W/X "Bali"	1993 - 1999	FL	
SJ 100	T/V/W/X "Bali-Ex"	1996 - 1999	FL	
CA 125	V/W/X "Rebel"	1998 - 2000	FL	
CLR 125	W "City Fly"	1999 - 2003	FL	
CRM 125	RL/RM/RN/RP/RR/RV/RX (JD10)	1990 - 1999	FL	
NS 125	FG/FH/RH	1986 - 1987	FL	
NSR 125	FJ/FK/FL/FM/FN	1988 - 1992	FL	
NSR 125	RK/RL/RM/RN/RR/RS/RV/RW/RX/RY/R1	1989 - 2001	FL	
NX 125	K/S/F Transcity	1989 - 1997	FL	
XL 125	L Paris-Dakar	1985 - 1985	FL	
XL 200	L	1985 - 1985	FL	
CMX 250	CV/CW/CX Rebel (Grimeca Caliper)	1997 - 2000	FL	

AD	K1	K5	S3

PART NUMBER

010

MALAGUTI

	500	Spidermax GT	2004 - 2010	FL	FR
	500	Spidermax RS	2004 - 2011	FL	FR

MOTO-GUZZI

V7	750	Anniversario	2017 - 2017	RR	
V7	750	Racer	2010 - 2017	RR	
V7	750	Racer II (ABS/Spoke Wheel)	2015 - 2017	RR	
V7	750	Special (Spoke wheel)	2012 - 2014	RR	
V7	750	Special II (ABS/Cast Wheel)	2015 - 2017	RR	
V7	750	Special III (ABS /Spoke Wheel)	2017 - 2020	RR	
V7	750	Stone (Cast wheel)	2012 - 2014	RR	
V7	750	Stone II (ABS/Spoke Wheel)	2015 - 2017	RR	
V7	750	Stone III (ABS/ Cast Wheel)	2017 - 2020	RR	
V7	750	Stornello II	2016 - 2017	RR	
V85	850	TT	2018 - 2020	RR	
V9	850	Bobber	2016 - 2019	RR	
V9	850	Roamer	2016 - 2020	RR	
V9	850	X-Track	2017 - 2017	RR	

MOTO-MORINI

350	Excalibur	1987 - 1987	FL	
350	Kanguro	1987 - 1987	FL	
501	Camel	1988 - 1988	FL	
501	Excalibur	1987 - 1987	FL	

SCARABEO

500	ie	2010 - 2011	FL	FR

SIMSON

125		2001 - 2001	FL	
125	RS	2001 - 2001	FL	
125	Schikra	1999 - 1999	FL	

W.K.BIKES

125	RR	2012 - 2013	RR	

EQUIVALENTS OEM

159 07 6340	238 070 5 6340	326 814	344839	45105 KB9 960	45105 KR1 861	45105 KR1 862
45105 KR1 863	45105 KS3 901	45105 KS3 902	45105 KY4 901	45105 KY4 902	45105 KBS 405	8000 88725
8113865	8133540	8133724	8133725	06435 KBS W00	8113431	06455 GAV 405
8133798						

PART NUMBER

011

AD	K1	K5	S3	S33 RACING

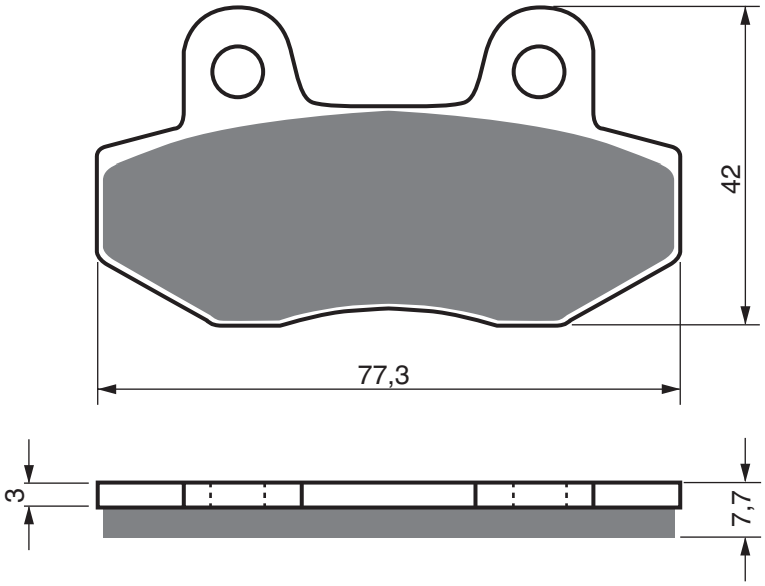

AJS						
JSM	50	Motard	2012 - 2015	FL		
	125	Bobber (Custom)	2010 - 2015	FL		
	125	Daytona	2013 - 2015	FL		
	125	Daytona E	2010 - 2010	FL		
DD	125	E Mk2 Regal Raptor (Cast wheels)	2010 - 2014	FL		
EOS	125	Regal Raptor	2009 - 2015	FL		
JS	125	6C Eco Custom	2012 - 2014	FL		
JSM	125	Motard	2010 - 2015	FL		
JSM	125	Trail	2013 - 2014	FL		
NAC 12	125	cc	2009 - 2014	FL	RR	
E-9PB	350		2013 - 2014	FL		
EOS	350		2013 - 2014	FL		
ASPES						
	125	Vega Hybrid	2011 - 2014	FL		
	150	Perseo Hybrid	2011 - 2014	RR		
ATK						
GT	250	R V-Twin Sport	2011 - 2011	FL	FR	RR
GV	250	V-Twin	2011 - 2011	FR		
GT	650	R V-Twin Sport	2011 - 2011	FL	FR	RR
GV	650	V-Twin Cruiser	2011 - 2011	FL	FR	RR
BENELLI						
	125	Aurak MY (BJ 125 10A)	2016 - 2017	FL		
BETA						
R	150	(Minicross/4T/49cc)	2010 - 2013	RR		
CAGIVA						
	125	Brillio	2008 - 2008	FL		
CCM						
C-XR	125	E	2008 - 2009	FL		
C-XR	125	M	2007 - 2009	FL		
C-XR	125	S	2008 - 2009	FL		
TL	125		2008 - 2009	FL		
C-XR	230	E	2007 - 2009	FL		
C-XR	230	M	2007 - 2009	FL		
C-XR	230	S	2007 - 2009	FL		
XTR	250		2009 - 2009	FL		
CF MOTO						
CF	250	T - 6A Jetmax (Scooter)	2012 - 2015	FL	FR	
CPI						
	50	Bravo	2012 - 2012	FL		
	125	Bravo	2012 - 2012	FL		
SUV	125		2011 - 2012	FL		
XR	125	Sprint	2011 - 2012	FL		
	250	X-Large	2011 - 2012	FL	RR	
XR	250		2012 - 2012	FL	RR	
DAELIM						
	110	Citi Ace	2003 - 2011	FL		
E-TROPOLIS (ELECTRIC SCOOTERS)						
		Bel Air	2013 - 2013	FL	RR	
		Bel Air Lithium	2014 - 2014	FL	RR	
		Future	2013 - 2013	FL	RR	
		Miami	2013 - 2013	FL	RR	
		Milano	2014 - 2014	FL	RR	
		Retro	2013 - 2013	FL	RR	
		Retro Lithium	2014 - 2014	FL	RR	
GARELLI						
XO'E		(Electric)	2012 - 2012	FL		
	125	Comfort	2007 - 2007	FL		
XO	125	i (TM 125 T)	2009 - 2012	FL		
	150	Mosquito	2007 - 2007	FL		
XO	150	i (TM 150 T)	2009 - 2012	FL		
XO	200	i (TM 200 T)	2009 - 2012	FL		
GENERIC						
		Vionis (Electric)	2018 - 2018	FL	RR	
TTX		(Electric)	2016 - 2018	FL	RR	
	50	Classic	2017 - 2018	FL		
	50	Vertigo (4T)	2012 - 2014	FL		
	110	Madison (4T)	2013 - 2014	FL		
	110	Venos (4T)	2013 - 2014	FL		
	125	Vertigo	2013 - 2018	FL		
GO CCIA (ELEC SCOOTERSTRIC)						
		E-Gora (Li/Si)	2012 - 2015	FL		
GOES						
G	55	R Scooter	2008 - 2014	FL		
G	125	M	2008 - 2014	FL		
G	125	X	2008 - 2009	FL	RR	
SP	125	R (Motorcycle)	2010 - 2012	FL		
HERO - HONDA						
	125	Slickster	2006 - 2006	FL		
HONDA						
MBX	50	SD/SF	1983 - 1985	FL		
NSR	50	FP/FR/FS	1993 - 1995	FL		

AD | K1 | K5 | S3 | S33 RACING

PART NUMBER

011

NSR	50	SK/SP/SR/SS	1989 - 1995	FL		
NSR	80	J-2/K/L/N (HC06)	1988 - 1992	FL		
CBX	125	Custom	1988 - 1988	FL		
FS	125	Sonic	2003 - 2004	FL		
LS	125	RY	2000 - 2000	FL		
MBX	125	FE	1984 - 1986	FL		
CBX	250		1984 - 1998	FL		
HONGDOU						
CTM	125	Chituma	2004 - 2004	FL		
HONLEY						
RX3	250	Venture	2015 - 2017	FL		
HP POWER						
	50	Copper (4T)	2010 - 2012	FL		
	125	Chromel (4T/LC)	2011 - 2012	FL	RR	
	125	Lithium (2T/LC)	2010 - 2012	FL	RR	
	150	Chromel (4T/LC)	2011 - 2012	FL	RR	
	150	Lithium (4T/2V/LC)	2010 - 2012	FL	RR	
	150	Nickel (4T/2V)	2010 - 2011	FL		
	300	Chromel	2011 - 2011	FL	RR	
	300	Radium (4T/4V)	2011 - 2012	FL	RR	
HYOSUNG						
	125	/250 Comet	2004 - 2004	FL	RR	
	125	Comet GT (Naked)	2004 - 2006	FL	RR	
	125	Exceed (MS 125/150)	2002 - 2004	RR		
GPS	125	Grand Prix Plus (Rear Disc Model)	2000 - 2004	RR		
GT	125		2004 - 2004	FL	RR	
GT	125	Naked	2003 - 2003	FL	RR	
GV	125	Aquilia	2001 - 2006	FL		
RT	125	Karion	2002 - 2009	FL		
RT	125	Karion	2002 - 2006	FL		
RX	125		2001 - 2002	FL		
XRX	125	Enduro	2000 - 2006	FL		
	250	Comet GT	2004 - 2005	FL	RR	
	250	Comet GT (Naked)	2004 - 2006	FL	RR	
GV	250	Aquilia	2001 - 2009	FL		
RX	400		2005 - 2005	FL		
	650	Comet GT (Naked)	2004 - 2006	FL	RR	
	650	Comet GT (Naked)	2004 - 2006			
	650	Comet GT R	2004 - 2006	FL	FR	RR
	650	Comet GT S	2005 - 2006	FL	FR	RR
GT	650		2006 - 2008	FL	FR	RR
GT	650	R	2004 - 2004	FL	FR	RR
GT	650	S	2005 - 2008	FL	FR	RR
GT	650	X	2007 - 2007	FL	FR	RR
GV	650	Aquilia	2004 - 2006	FL	FR	RR
GV	700	C		FL	FR	RR
ITALJET						
	125	Formula (4T/Single Cyl)	2014 - 2015	FL		
	650	Bazooka	2006 - 2006	FL	RR	
	650	Grifon #59	2006 - 2006	FL	RR	
JIALING						
JE	125	E Dragon	1998 - 1998	FL		
JONWAY						
YY	50	QT-10 (2T) Viper	2007 - 2009	FL		
YY	50	QT-10 (4T) Viper	2007 - 2009	FL		
YY	50	QT-28 (2T) Raptor	2007 - 2009	FL		
YY	50	QT-28 (4T) Raptor	2007 - 2009	FL		
YY	50	QT-6 (2T) Agility	2007 - 2009	FL		
YY	50	QT-6 (4T) Agility	2007 - 2009	FL		
YY	80	QT-6 (4T) Agility	2007 - 2009	FL		
YY	150	T-19	2008 - 2009	FL	RR	
YY	250	T-19	2008 - 2009	FL	RR	
KEEWAY						
	50	Agora (4T)	2010 - 2015	FL		
	50	Zahara (2T/4T)	2013 - 2015	FL		
	110	Kee	2012 - 2014	FL		
	125	Link	2013 - 2014	FL	RR	
	125	Strike	2013 - 2014	FL		
	125	Zahara (2T/4T)	2013 - 2015	FL		
RKS	125		2010 - 2011	FL		
	150	Strike	2013 - 2014	FL		
	200	i Link	2013 - 2014	FL	RR	
KENTOYA						
	200	Trigger	2004 - 2004	RR		
KREIDLER						
		e-Florett 1.00 (3.0kW)	2014 - 2015	FL		
		e-Florett 3.00 (4.0kW)	2014 - 2015	FL		
	50	Flory Classic (50cc/4T/A-C)	2014 - 2015	FL		
	50	Galactica 3.0 LC (2T/L-C)	2014 - 2015	FL		
RS	50	Galactica 3.0 (2T/A-C)	2014 - 2015	FL		
KYMCO						
	50	Jetix	2008 - 2009	FL		
	50	Jetix	2010 - 2015	FL		
	50	Nexxon	2008 - 2009	FL	RR	
SR	50	Active	2008 - 2011	FL		
	100	Spike	2000 - 2006	FL		
	125	Jetix	2010 - 2015	FL		
	125	Nexxon	2007 - 2008	FL	RR	
	125	Spike	2000 - 2006	FL		
	150	Jetix	2010 - 2010	FL		
DX	150	Custom	1993 - 1993	FL		
NSR	150		1993 - 1993	FL		
LAMBRETTA						
	50	N Pato	2008 - 2010	FL	RR	
	125	N Pato	2008 - 2010	FL	RR	
	151	N Pato	2008 - 2010	FL	RR	
ANA	151		2008 - 2008	FL		
LEONART						
	125	Bobber	2013 - 2014	FL		
	125	Daytona	2013 - 2014	FL		
	125	Raptor	2013 - 2014	FL		
	125	Spyder	2013 - 2014	FL		
	250	Raptor	2013 - 2014	FL		
	350	Bobber	2013 - 2014	FL		
	350	Daytona	2013 - 2014	FL		
	350	Spyder	2013 - 2014	FL		
LEXMOTO						
	50	Milano (FT50QT-27)	2016 - 2018	FL		
FMR	50	(WY50QT-58R)	2015 - 2018	FL		
LSM	50	(STR50)	2012 - 2016	FL		
	125	Aspire (TD125-43)	2012 - 2016	FL		
	125	Matador (ZS125T-40)	2013 - 2018	FL		
	125	Milano EFi (FDT125T-27)	2012 - 2018	FL		
	125	Milano EFi (FT125T-27-E4)	2016 - 2020	FL		
	125	Tommy (ZN125T-E)	2011 - 2017	FL		
FMR	125	(WY125-74R)	2014 - 2018	FL		
FMR	125	EFi (WY125T-74R-E4)	2014 - 2018	FL		
FMS	125	(ZN125T-7H)	2015 - 2018	FL		
LSM	125	(STR125YB)	2012 - 2018	FL		
LIFAN						
LF	100	A		FR		
MASH						
	50	City	2018 - 2018	FL	RR	
	125	Black Seven	2017 - 2020	FL		
	125	City	2018 - 2020	FL	RR	
	125	Sixty Five	2013 - 2015	FL		
	250	Black Seven	2017 - 2020	FL		
	250	Café Racer	2017 - 2018	FL		

PART NUMBER

011

AD	K1	K5	S3	S33 RACING

	250	Two Fifty	2014 - 2016	FL	
	250	Two Fifty	2017 - 2020	FL	
	400	Family Side x Side Car Outfit	2018 - 2020	RR	
MEGELLI					
	125	M	2008 - 2010	FL	
	125	R (Sportbike)	2008 - 2010	FL	
	125	S (Naked Sport Bike)	2008 - 2010	FL	
MOTO-ROMA					
	49	Go-Go	2003 - 2003	FL	
MOTOM					
ANA	50		2008 - 2009	FL	
	125	Dolcevita	2008 - 2009	RR	
	125	Transcity	2008 - 2009	RR	
	151	Dolcevita	2008 - 2009	RR	
ANA	151		2008 - 2009	FL	
	250	Transcity	2008 - 2009	RR	
NIPPONIA					
	50	Brio (4T)	2012 - 2013	FL	
	50	EZio (4T)	2012 - 2014	FL	
	125	Brio (4T)	2012 - 2015	FL	
	125	Dion (4T)	2013 - 2015	FL	
	125	EZio (4T)	2012 - 2014	FL	
	150	Dion (4T)	2012 - 2014	FL	
PEUGEOT					
	50	Speedfight 3 RS (AC/2T)	2010 - 2012	FL	
	50	Speedfight 3 (AC/2T)	2009 - 2015	FL	
	50	Speedfight 3 (LC/2T)	2009 - 2015	FL	
	50	Speedfight 3 -RS (LC/2T)	2009 - 2012	FL	
	50	Speedfight 3 Darkside (50cc/LC/2T)	2013 - 2015	FL	
	50	Speedfight 3 Furious (LC/2T)	2013 - 2013	FL	
	50	Speedfight 3 Iceblade (50cc/LC/2T)	2013 - 2015	FL	
	50	Speedfight 4 20 Ans Edition (50cc/AC/2T)	2018 - 2018	FL	
	50	Speedfight 4 Classic AC (2T/4T)	2015 - 2020	FL	
	50	Speedfight 4 Classic LC (2T/4T)	2015 - 2020	FL	
	50	Speedfight 4 Darkside (50cc/AC/LC/2T/4T)	2015 - 2018	FL	
	50	Speedfight 4 Iceblade (50cc/AC/LC/2T/4T)	2015 - 2018	FL	
	50	Speedfight 4 Pure (50cc/AC/LC/2T/4T)	2015 - 2018	FL	
	50	Speedfight 4 R-Cup (AC/LC/2T)	2018 - 2020	FL	
	125	Speedfight 3 (4T)	2014 - 2015	FL	
	125	Speedfight 3 Darkside (4T)	2014 - 2015	FL	
	125	Speedfight 3 Iceblade (4T)	2014 - 2015	FL	
	125	Speedfight 3 Team (4T)	2014 - 2015	FL	
QUADZILLA					
WK	110		2006 - 2008	RR	
WK	125		2006 - 2009	RR	
SACHS					
	50	Mad Ass (4T)	2006 - 2009	FL	
	50	Madass (2 Stroke)	2004 - 2005	FL	
	50	Madass (4 stroke)	2004 - 2005	FL	
	125	Mad Ass (4T)	2006 - 2009	FL	
	125	Madass	2005 - 2005	FL	RR
SCOMADI					
TL	50	Air Cooled	2015 - 2019	FL	
TL	125	Air Cooled	2015 - 2019	FL	
TL	200	Liquid Cooled	2015 - 2019	FL	
SFM					
ZX	125	Enduro (Spoke wheels)	2013 - 2015	FL	
ZZ	125	SM (Cast Wheels)	2013 - 2015	FL	
SINNIS					
	50	Nitro (2T)		FL	
	50	Strike (2T)	2009 - 2010	FL	
	125	Nitro (WY 125 T-56A)	2009 - 2010	FL	
SMC					
YB	125		2009 - 2009	FL	RR
YB	150		2009 - 2009	FL	RR
YB	250		2009 - 2009	FL	RR
SUPERBYKE					
CQ	50	Road Classic		RR	
	125	M-Ped Road Classic		FL	
CU	125	Road Classic		RR	
RMX	125		2007 - 2008	FL	RR
R-SR	250			FL	RR
SYM					
	125	Wolf Legend	2004 - 2005	FL	
TAMORETTI					
	50	Retro		FL	
	125	Retro		FL	
VECTRIX					
VX-2			2012 - 2014	FL	
VIALLI					
	50	Truro	2006 - 2006	FL	
W.K.BIKES					
	50	Bellisima (4T)	2013 - 2015	FL	
	50	Wasp R (2T)	2013 - 2015	FL	
VS	50	(4T/Scooter)	2013 - 2015	FL	
WK	50	GO (4T)	2011 - 2015	FL	
	125	Bellisima (4T)	2013 - 2015	FL	
	125	Tomcat (4T)	2015 - 2015	FL	
	125	Wasp (4T)	2013 - 2015	FL	
WK	125	Cruiser (4T)	2015 - 2015	FL	RR
GTR	300		2013 - 2015	FL	
WT MOTORS					
	50	Bilbao (4T)	2008 - 2009	FL	

EQUIVALENTS OEM

451A0 KR 603	45105 GE2 004	45105 GE2 006	45105 GE2 305	45105 KK4 004	45105 KK4 007	45105 KK4 014
45105 KR3 004	45105 KR3 007	45105 KR3 014	45105 KR3 601	45105 KR3 602	45105 KR3 603	45105 KW7 405
46630 FYBQ 000	P4064905001002640	251 0037 A	59300 HG5 800	59301 HP9 500	PE776170	67660000116700
14140001000E	5190-080256					

AD	S3	S33 RACING

PART NUMBER

013

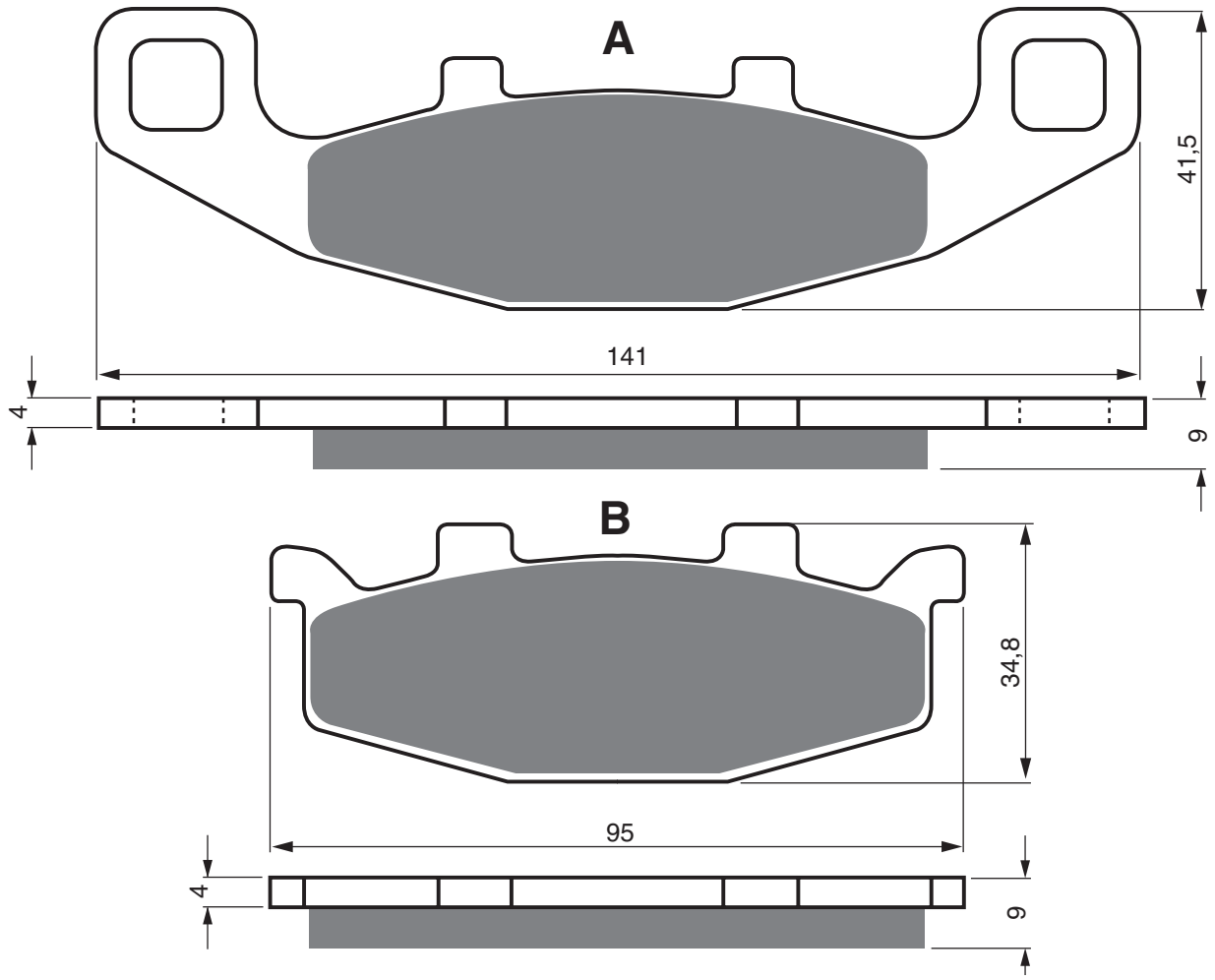

KAWASAKI

GPX	250	R (EX 250 F)	1987 - 1987	FL	FR	
GPX	250	R (ZX 250 F2-F9)	1988 - 1995	FL		
KLE	250	A2 Anhelo	1995 - 1995	FL		
KLE	250	A3	1997 - 1997	FL		
KLE	250	A5/A6	2000 - 2001	FL		
ZR	250	A1-A5 Balius	1991 - 1995	FL		
ZZR	250	(EX 250 H1-H13)	1990 - 2003	FL		
GPX	400	R (ZX 400 F1)	1987 - 1987	RR		
GPZ	400	R D4	1988 - 1988	RR		
ZL	400	D1/D2	1994 - 1995	FL		
ZRX	400	(ZR 400 E1/E2)	1994 - 1995	FL	FR	
ZZ-R	400	(ZX 400 K1/K2/K3)	1990 - 1992	RR		
ER-5	500	(ER500 A1/A2/A3/A4)	1997 - 2000	FL		
GPZ	500	S (EX500 A1-A6)	1987 - 1993	FL		
GPZ	500	S (EX500 D1-D7)	1994 - 2001	FL	FR	
KLE	500	A1-A12	1991 - 2004	FL		
KLE	500	B1P/B6F/B7F	2005 - 2007	FL		
ZR	550	B2/B3 Zephyr	1991 - 1993	FL	FR	
ZR	550	B4/B5/B6 Zephyr	1994 - 1999	FL	FR	
GPX	600	R (ZX 600 C1-C7)	1988 - 1996	FL	FR	RR
GPZ	600	R	1994 - 1994	FL	FR	RR
ZL	600	B1 Eliminator	1995 - 1997	FL	FR	
ZX	600	C1-C10 Ninja R	1988 - 1997	FL	FR	RR
ZZ-R	600	(ZX 600 D1-D3)	1990 - 1993	RR		
KL	650	B1-B3 Tengai	1989 - 1992	FL		
GPX	750	R (ZX 750 F1-F3)	1987 - 1989	FL	FR	RR
ZR	750	C1-C5 Zephyr	1991 - 1995	FL	FR	RR
ZR	750	D1 Zephyr	1996 - 1999	RR		
GPZ	900	R (ZX 900 A11)	1998 - 1998	RR		
GPZ	900	R (ZX 900 A12-15)	1999 - 2002	RR		
GPZ	900	R A7/A8	1990 - 1996	RR		
ZR	1 000	A9-A14 (1000 GTR)	1994 - 1999	FL	FR	
ZX	1 000	B1-B3 (ZX-10)	1988 - 1990	FL	FR	RR
ZR	1 100	A1-A4 "Zephyr"	1992 - 1995	RR		
ZR	1 100	B1 "Zephyr"	1996 - 1997	RR		
ZR	1 100	B5 (Zephyr 1100 RS)	2002 - 2002	RR		
ZZR	1 100	(ZX 1100 C1-C3)	1990 - 1992	RR		

PART NUMBER

013

AD | S3 | S33 RACING

SUZUKI

RG	125	UN "Wolf"	1992 - 1994	FL
RG	125	UN "Wolf" (ND13E) Naked	1992 - 1994	FL
GSF	250	N/Z/M/P/NP/ZP/N/NR	1992 - 1996	FL
GSX	250	FL/FM/FN/FP/FR/FS/FT/FV/FW Across	1990 - 1998	FL
GSX	250	SSM Katana (GJ76A)	1991 - 1991	FL
SW-1	250	(NJ45A)	1992 - 1992	FL
GSF	400	M/N/P Bandit	1991 - 1995	FL
GS	500	EK/EL/EM/EN/EP/ER/ES	1989 - 1995	FL
DR	800	SM/SN/SP/SR/SS (SR43B)	1991 - 1995	FL
VX	800	L/M/N/P/R/T	1990 - 1996	FL
GSX	1 100	GM/GN/GP (GV74A/F725)	1991 - 1994	FL FR

EQUIVALENTS OEM

43082 1068	43082 1069	43082 1074	43082 1077	43082 1088	43082 1095	43082 1104
43082 1114	43082 1123	43082 1124	43082 1134	43082 1139	43082 1161	43082 1189
59100 01820	59100 26810	59100 45860	59301 45860	59302 45810		

AD	S3	S33 RACING

PART NUMBER

014

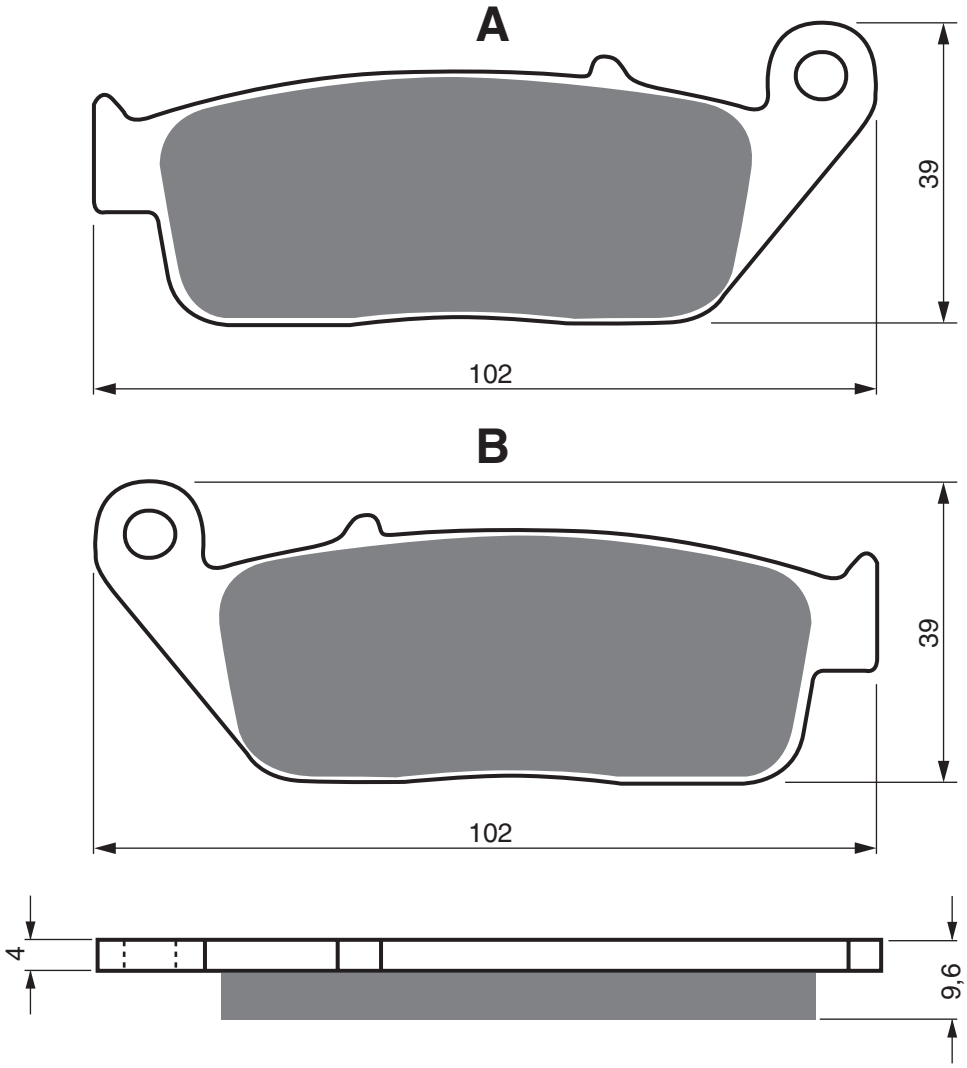

BENELLI

	400	Imperiale	2018 - 2018	FL	

BMW

C		Evolution (Scooter)	2014 - 2018	RR	
C		Evolution Electric	2018 - 2020	RR	
C	600	Sport Evolution Scooter	2014 - 2020	RR	
C	600	Sport Highline	2013 - 2015	RR	
C	600	Sport Scooter	2012 - 2015	RR	
C	650	GT Highline	2013 - 2018	RR	
C	650	GT Scooter	2012 - 2018	RR	
C	650	Sport Scooter	2016 - 2020	RR	

BUELL

	500	Blast	2000 - 2007	FL	

DAELIM

VJ	125	Roadwin	2004 - 2013	FL	
VJF	125	Roadwin R Fi	2008 - 2014	FL	
VL	125	Daystar/L	2003 - 2014	FL	
VS	125	Evolution	2001 - 2004	FL	
VT	125	Evolution	2003 - 2003	FL	

HARLEY DAVIDSON

FXDR	1 870	114	2018 - 2020	FL	FR

HONDA

NSS	125	Forza (2 piston caliper)	2015 - 2018	FL	
RS	125	R	1990 - 1994	FL	
SH	125	i (2 piston caliper/ABS)	2014 - 2018	FL	
SH	150	i (2 piston caliper/ABS)	2014 - 2018	FL	
CB	250	N/T/W/X/Y/1/4 "Two Fifty"	1992 - 2005	FL	
CN	250	3 (MF02) Fusion/FusionX/Fusion X Special	2003 - 2003	FL	
RS	250	R	1990 - 1994	FL	FR
VT	250	CR/CT/CV "Magna"	1995 - 1997	FL	
VTR	250	-9	2009 - 2010	FL	
VTR	250	W/Y/1-7 (MC33)	1998 - 2007	FL	
CB	300	F AC (ABS)	2015 - 2017	FL	
CB	300	FA AC (ABS)	2018 - 2020	FL	
CBR	300	R (Non ABS)	2018 - 2020	FL	
CBR	300	RA (ABS)	2014 - 2020	FL	
CMX	300	Rebel	2018 - 2020	FL	
CMX	300	Rebel (ABS)	2018 - 2020	FL	
NSS	300	D Forza (ABS)	2018 - 2020	FL	
SH	300	i (2 piston caliper/ABS)	2016 - 2018	FL	
CB	400	SS (SS2-NC41)	2001 - 2005	FL	
CL	400	(NC38)	1998 - 2003	FL	
FJS	400	D6/D7/D8 Silverwing (Non ABS 256mm front disc)	2006 - 2008	RR	

PART NUMBER

014

AD | S3 | S33 RACING

NV	400	DCY/DC1/DC2 (NC40) Shadow Slasher	2000 - 2002	FL		
SW-T	400	(FJS 400 A9/AB) ABS	2009 - 2016	RR		
SW-T	400	(FJS 400 D9)	2009 - 2009	RR		
VRX	400	T (NC33)	1996 - 1996	FL		
CB	500	F (Non ABS)	2013 - 2020	FL		
CB	500	FA (ABS)	2013 - 2020	FL		
CB	500	FD/FE/FF (Non ABS)	2013 - 2020	FL		
CB	500	R/T	1994 - 1996	FL		
CB	500	X (Non ABS)	2013 - 2020	FL		
CB	500	XA (ABS)	2013 - 2020	FL		
CBF	500	4 (Non ABS Model)	2004 - 2004	FL		
CBR	500	R (Non ABS/Twin)	2013 - 2020	FL		
CBR	500	RA (ABS/Twin)	2013 - 2020	FL		
CMX	500	REBEL (ABS)	2018 - 2020	FL		
CMX	500	REBEL (Non ABS)	2018 - 2020	FL		
CB	600	F2Y/F21/F22 Hornet S (17" Wheels)	2000 - 2004	FL	FR	
CB	600	F7/F8/F9/FA/FB/FC Hornet	2007 - 2013	FL	FR	
CB	600	FW/FX Hornet (16" Wheels)	1998 - 1999	FL	FR	
CB	600	FY/F1/F2/F3/F4/F5/F6 Hornet (17" Wheel)	2000 - 2006	FL	FR	
CBF	600	N4/N5/N6 (Non ABS)	2004 - 2006	FL	FR	
CBF	600	N8/N9/NA (Non ABS)	2008 - 2011	FL	FR	
CBF	600	NA4/NA5/NA6 (ABS Model)	2004 - 2006	FL	FR	
CBF	600	S4/S5 (Non ABS)	2004 - 2005	FL	FR	
CBF	600	S8/S9 (Non ABS)	2008 - 2009	FL	FR	
CBF	600	SA4/SA5/SA6/SA7 (ABS)	2004 - 2008	FL	FR	
CBR	600	FB/FC (Non ABS)	2011 - 2013	FL	FR	
CBR	600	FS/FT/FV/FW	1995 - 1998	FL	FR	
FJS	600	1/2/B3/B4/D5/D6/D7/D8 Silverwing	2001 - 2008	RR		
SW-T	600	(FJS 600 AB) (ABS Model)	2011 - 2016	RR		
XL	600	VR/VT Trans Alp	1994 - 1996	FL		
FMX	650	(5/6)	2005 - 2008	FL		
DN-01	680	(NSA 700 A8/A9)	2008 - 2011	RR		
CTX	700	DE-DCT	2014 - 2019	FL		
CTX	700	N-DCT	2014 - 2019	FL		
NC	700	S (Non ABS)	2012 - 2013	FL		
NC	700	X (Non ABS)	2012 - 2013	FL		
CBR	750	FJ Superaero (RC27)	1988 - 1988	RR		
NC	750	D Integra Scooter DCT	2014 - 2015	FL		
NC	750	S (ABS)	2014 - 2018	FL		
NC	750	S (Non ABS)	2014 - 2015	FL		
NC	750	S DCT (ABS)	2014 - 2018	FL		
NC	750	X (ABS)	2014 - 2018	FL		
NC	750	X (Non ABS)	2014 - 2015	FL		
NC	750	X DCT (ABS)	2014 - 2018	FL		
NM4	750	Vultus (NC750J)	2015 - 2019	FL		
VF	750	CP/CR/CS/CT/CV/CW/CX	1993 - 1999	FL	FR	
VFR	750	FJ/FK	1988 - 1989	RR		
VFR	750	FL/FM/FN/FP	1990 - 1993	RR		
VFR	750	FR/FS/FT/FV	1994 - 1997	RR		
VT	750	C2BA/C2BB/C2BC/C2BE Shadow Black Spirit (Rear drum)	2010 - 2016	FL		
VT	750	CV/C2V/CW/C2W/CX/C2X/CY/C2Y/C1/C21/C31/C4/C5/C6/C7/C8 Shadow	1997 - 2009	FL		
VT	750	DC1/DC2 Black Widow	2001 - 2004	FL		
VT	750	DC7/DC8 Shadow Spirit	2007 - 2009	FL		
VT	750	S (VT 750 SA/SB)	2010 - 2012	FL		
CB	1 000	R (ABS Model)	2017 - 2020	RR		
CBF	1 000	6/7/8/9/A (2 piston front calipers / Non ABS Model)	2006 - 2011	FL	FR	
CBF	1 000	F (FA) (2 piston front calipers /Non ABS)	2010 - 2015	FL	FR	
CBR	1 000	FK/FL/FM/FN	1989 - 1992	RR		
ST	1 100	AN/AP/AR/AS Pan European (ABS Model)	1992 - 1995	RR		
ST	1 100	L/M/N/P/R/S Pan European (Non ABS)	1990 - 1995	RR		
ST	1 100	T/V/W/X/Y/1/2 Pan European (Non ABS)	1996 - 2002	RR		
VT	1 100	C2 (S/T/V/W/X/Y/1/2/3/4/5)	1995 - 2005	FL		
VT	1 100	C3 (W/X/Y)	1998 - 2000	FL		
VT	1 100	CR/CS/CT/CV/CW Shadow	1994 - 1998	FL		
VT	1 300	CXA (Fury/Chopper) (9 spoke wheel/Non ABS)	2010 - 2020	FL	FR	
VTX	1 300	C/T (Cast Wheel Models)	2003 - 2008	FL		
VTX	1 300	S (Spoke Wheel Models)	2003 - 2008	FL		
GL	1 500	CV/CW/CX/CY/C1/C2 (F6C)	1997 - 2003	RR		
INDIAN						
		Chief Dark Horse	2014 - 2020	RR		
		Chieftain Dark Horse (Nissin Calipers)	2016 - 2020	RR		
		Chieftain Limited (Nissin Calipers)	2017 - 2020	RR		
		Roadmaster Classic (Nissin Calipers)	2017 - 2020	RR		
		Roadmaster Elite (Nissin Calipers)	2017 - 2020	RR		
		Springfield	2016 - 2020	RR		
		Springfield Dark Horse	2018 - 2020	RR		
	1 800	Challenger 1800cc	2019 - 2020	RR		
	1 800	Challenger Dark Horse 1800cc	2019 - 2020	RR		
	1 800	Challenger Limited 1800cc	2019 - 2020	RR		
	1 800	Chief Classic (Nissin Caliper)	2014 - 2020	RR		
	1 800	Chief Vintage (Nissin Caliper)	2014 - 2020	RR		
	1 800	Chieftain (Nissin Caliper)	2014 - 2020	RR		
	1 811	Roadmaster (Cast Wheel/Nissin Calipers)	2015 - 2020	RR		
KAWASAKI						
EX	650	Ninja (ABS)	2017 - 2020	FL	FR	
EX	650	Ninja (KRT)	2018 - 2020	FL	FR	
EX	650	Ninja (Non ABS)	2017 - 2020	FL	FR	
ST	700	Stallion	2014 - 2018	RR		
KYMCO						
	250	Venox (R20010/RA50AA/Carb Model)	2000 - 2003	FL		
	250	Venox (R20012/EFi Model)	2007 - 2014	FL		
	250	Venox (RFBR20011/RA50AD/Carb Model)	2004 - 2006	FL		
	700	i Myroad	2009 - 2011	RR		
MBK						
VP	125	Cityliner	2008 - 2010	FL		
SUZUKI						
DL	250	V- Strom AL8/AL9 (ABS)	2018 - 2020	FL		
GSX	250	RL7/RL8	2017 - 2018	FL		
VL	1 500	BTL3/BTL4/BTL5 (CT 1500 BT Intruder)	2013 - 2015	FL		
SYM						
	125	Cevalo B9A (4T)	2010 - 2010	FL		
TRIUMPH						
	660	Street Triple S (Nissin F/Brembo R Calipers)	2017 - 2020	FL	FR	
	675	Street Triple (Naked)	2007 - 2012	FL	FR	
	675	Street Triple (Nissin F/Brembo R Calipers)	2013 - 2016	FL	FR	
	675	Street Triple R (Nissn F/Brembo R Calipers)	2013 - 2016	FL	FR	
	790	Speedmaster (Carb)	2003 - 2004	FL		
	800	Tiger (Non ABS)	2011 - 2014	FL	FR	
	800	Tiger (With ABS)	2011 - 2014	FL	FR	
	800	Tiger XC (ABS)	2011 - 2020	FL	FR	
	800	Tiger XC (Non ABS)	2011 - 2014	FL	FR	
	800	Tiger XCa (ABS) up to VIN 855531	2015 - 2018	FL	FR	
	800	Tiger XCx (ABS) up to VIN 855531	2015 - 2018	FL	FR	
	800	Tiger XR (ABS)	2015 - 2018	FL	FR	
	800	Tiger XRt (ABS) up to VIN 855531	2015 - 2018	FL	FR	
	800	Tiger XRx (ABS) up to VIN 855531	2015 - 2018	FL	FR	
	855	i Tiger (From VIN 71699)	1998 - 1999	FL	FR	RR
	865	Bonneville (Cast Wheels)	2009 - 2015	FL	FR	
	865	Bonneville Newchurch (Cast Wheel)	2015 - 2015	FL	FR	
	865	Bonneville SE (Cast Wheel)	2009 - 2011	FL	FR	
	865	Speedmaster (Carb)	2005 - 2007	FL	FR	
	865	Speedmaster (EFi)	2010 - 2016	FL	FR	
	885	Tiger 885cc	1992 - 1999	FL	FR	RR
	900	Adventurer (T309RT/H046)	1996 - 2001	FL	FR	RR
	900	Legend TT (T309RT/H046)	1999 - 2001	FL	FR	RR
	900	Thunderbird (T309RT/H046)	1995 - 2003	FL	FR	RR
	900	Thunderbird Sport (TC374/339)	1998 - 2003	FL	FR	RR

AD | S3 | S33 RACING

PART NUMBER

014

955	Tiger 955 (Cast Wheel Model) From VIN 198875	2004 - 2006	FL	FR	
955	Tiger 955cc (Spoke Wheel) Up to VIN 198874	2000 - 2004	FL	FR	RR

VICTORY

	Vegas Jackpot	2008 - 2012	RR	
	Vegas Jackpot	2013 - 2014	RR	
1 634	Hammer	2008 - 2011	RR	
1 634	Hammer 8-Ball	2010 - 2016	RR	
1 634	King Pin	2008 - 2012	RR	
1 634	King Pin 8-Ball	2008 - 2012	RR	
1 634	King Pin Low	2009 - 2009	RR	
1 634	Vegas	2008 - 2012	RR	
1 634	Vegas 8-Ball	2008 - 2017	RR	
1 634	Vegas Low	2008 - 2009	RR	
1 731	Arlen Ness Victory Vision	2010 - 2012	RR	
1 731	Boardwalk (Spoke Wheels)	2013 - 2015	RR	
1 731	Cory Ness Cross Country	2011 - 2012	RR	
1 731	Cory Ness Jackpot	2008 - 2010	RR	
1 731	Cross Country	2010 - 2017	RR	
1 731	Cross Country 8-Ball	2014 - 2014	RR	
1 731	Cross Country 8-Ball	2015 - 2016	RR	
1 731	Cross Country Touring	2012 - 2017	RR	
1 731	Cross Roads	2010 - 2012	RR	
1 731	Cross Roads 8-Ball	2014 - 2015	RR	
1 731	Cross Roads 8-Ball (Cast Wheel)	2014 - 2014	RR	
1 731	Cross Roads Classic	2013 - 2014	RR	
1 731	Cross Roads Classic (Spoke Wheel)	2013 - 2014	RR	
1 731	Cross Touring	2013 - 2017	RR	
1 731	Gunner	2015 - 2017	RR	
1 731	Hammer	2009 - 2011	RR	
1 731	Hammer S	2008 - 2017	RR	
1 731	Hard Ball (Spoke Wheel)	2012 - 2013	RR	
1 731	Highball (Spoke&Cast Wheel)	2012 - 2017	RR	
1 731	Jackpot	2007 - 2016	RR	
1 731	Judge	2013 - 2017	RR	
1 731	Magnum	2015 - 2017	RR	
1 731	Vision 8-Ball	2010 - 2012	RR	
1 731	Vision Street	2008 - 2009	RR	
1 731	Vision Tour (all models)	2008 - 2015	RR	
1 731	Zach Ness Vegas	2011 - 2011	RR	

W.K.BIKES

WK	125	R (4T)	2010 - 2014	FL	
WK	125	Sport	2011 - 2014	FL	

YAMAHA

	125	X- Max 125 (2DM/Brembo R/Caliper)	2014 - 2016	FL	FR
VP	125	X-City (16P)	2008 - 2015	FL	
X-MAX	125	Momo Design	2015 - 2015	FL	
XP	125	RA X-Max - IRON Max (ABS)	2016 - 2016	FL	
YP	125	Majesty DX (Taiwan Production)	2002 - 2002	FL	
YP	125	R (X-Max - ABS) (39D2/Nissin F/Caliper)	2011 - 2017	FL	
YP	125	R (X-Max - Non ABS) (39D1/5) Nissin F/Caliper	2010 - 2015	FL	
YP	125	R X- Max (2DM/Heng Tong R/Caliper)	2014 - 2014	FL	
YP	125	R X-Max (2DM/Brembo R/Caliper)	2014 - 2016	FL	
YP	125	R X-Max Sport	2011 - 2012	FL	
YP	125	RA X- Max ABS (39D2/Nissin F/Caliper)	2011 - 2017	FL	
YP	125	X-Max Business (ABS)	2011 - 2011	FL	
XC	155	F/G SMAX	2015 - 2016	FL	
VP	250	X-City (5B2)	2007 - 2016	FL	
X-Max	250	Momo Design	2015 - 2015	FL	
XP	250	R X-Max (2PLI) Non ABS (Nissin Front/Brembo Rear)	2014 - 2015	FL	
XP	250	R X-Max (37P) (Nissan Front Caliper/Non ABS)	2010 - 2013	FL	
XP	250	R X-Max (Non ABS)	2014 - 2016	FL	
XP	250	RA X-Max - Iron Max (ABS)	2016 - 2016	FL	
YP	250	R X-MAX (2DL / Non ABS / Heng Tong R-Caliper)	2014 - 2016	FL	
YP	250	R X-Max (ABS)	2011 - 2016	FL	
YP	250	R X-Max ABS	2014 - 2015	FL	
YP	250	R X-Max Sport	2011 - 2012	FL	
XC	300	Versity	2006 - 2006	FL	
XP	400	RA X-Max - Iron Max (ABS)	2016 - 2016	FL	
XP	400	X-MAX Momo Design (ABS)	2015 - 2015	FL	
YP	400	R X-Max (Non ABS)	2013 - 2016	FL	FR
YP	400	RA X-Max (ABS)	2013 - 2018	FL	FR
YP	400	X-Max Momo Design (ABS)	2015 - 2015	FL	FR
MT-01	1 670	(6 piston radial caliper)	2007 - 2010	RR	
MT-01	1 670	(Rad.cal.)	2005 - 2006	RR	
MT-01	1 670	S (5YUR)	2009 - 2009	RR	
MT-01	1 700		2007 - 2016	RR	

EQUIVALENTS OEM

06435 MCT 405	06435 ML7 P01	06435 ML7 415	06435 MS2 P00	06435 MT3 405	06435 MS9 405	06435 MZO 006
06455 MZ0 760	06455 MAW 621	06455 MAB 405	06455 MAH 405	06455 KCR 405	06455 MAA 405	06455 MBK 751
06455 MEA 671	431A0 MT4 670	43105 ML7 921A	43105 ML7 922A	43105 MS2 007A	43105 MS9 612A	43105 MT3/6 007
43105 MT4 007A	43105 MY7 405	43106 ML7 921B	45105 LEA7 305	45106 MN8 671B	45106 MS9 612B	45106 MW3 671
T2020077	T2020194	T2020537	06455 KFR 701	45105 KED9 305	5YU W0046 00	06455 MCK A01
45105 BA5 RB10M1	45106 BA5 RB10M1	1S6 W0045 00	37P F5811 00	H0300T	06455 MV4 405	06455 MR4 405
06455 MAL G01	06455 MGS D31	06455 MGS D32	06455 KYJ 901	43082 0165		

PART NUMBER

015

AD | S3 | S33 RACING

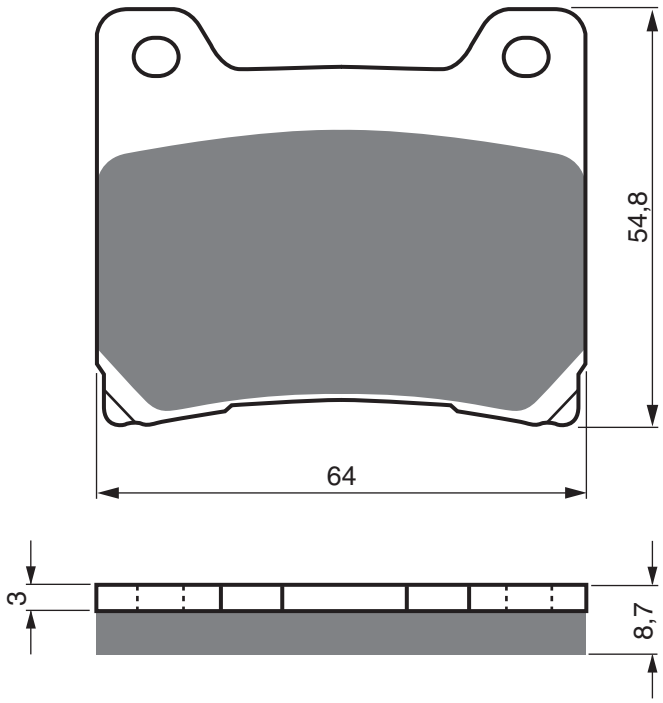

NORTON

		Commander (Rotary)	1990 - 1990	FL	RR	

YAMAHA

FJ	100	L, LC	1984 - 1984	FL	RR	
TZR	125		1990 - 1992	FL		
FZ	250	Phazer	1985 - 1986	FL	FR	
RD	350	YPVS	1983 - 1984	RR		
FZ	400	N (IFK 146X 133M)	1985 - 1985	FL	FR	
FZR	400	Genesis (1WG)	1986 - 1986	FL	FR	
SRX	400	(1JL)	1985 - 1985	FL		
XJR	400		1995 - 1995	RR		
RD	500	LC (1GE/D769)	1984 - 1986	FL	FR	
RD	500	LC (47X/D467)	1984 - 1987	FL	FR	
RZV	500	R (SIX)	1985 - 1985	FL	FR	
FZ	600		1987 - 1988	FL	FR	
FZR	600		1989 - 1989	FL	FR	RR
FZR	600		1990 - 1993	RR		
FZR	600	R	1994 - 1995	RR		
XJ	600		1984 - 1991	FL	FR	RR
YX	600	S/SC/T/TC/UC/U/W/WC/A/AC "Radian"	1986 - 1990	FL	FR	
YZF	600	R Thundercat	1996 - 2003	RR		
FZX	700	S/SC/T/TC Fazer	1986 - 1987	FL	RL	RR
FZ	750		1985 - 1988	FL	FR	RR
FZ	750		1989 - 1991	RR		
FZ	750	Genesis	1987 - 1987	RR		
FZR	750	R "OWOI"	1989 - 1990	RR		
FZX	750		1987 - 1987	FL	FR	RR
XV	750	Virago	1992 - 1993	FL	FR	
YZF	750	R/SP	1993 - 1997	RR		
TDM	850		1991 - 1995	RR		
TDM	850		1996 - 2001	RR		
TRX	850		1996 - 1999	RR		
TRX	850	(Italy)	1995 - 1995	RR		
XJ	900	/900 F	1983 - 1992	FL	FR	RR
XJ	900	S Diversion	1995 - 2003	RR		
FZR	1 000	EX UP (6 piston caliper)	1994 - 1995	RR		
FZR	1 000	EX UP (Std Forks)	1989 - 1990	RR		
FZR	1 000	EX UP (USD Forks)	1991 - 1993	RR		
FZR	1 000	Genesis	1987 - 1988	RR		
GTS	1 000		1993 - 1999	RR		
XV	1 000	SE Virago	1986 - 1988	FL	FR	
XV	1 000	Virago (2AE/E163)	1986 - 1988	FL	FR	
YZF	1 000	R "Thunderace"	1996 - 2002	RR		
BT	1 100	P/R/S/T/V Bulldog	2002 - 2006	RR		
FJ	1 100		1984 - 1985	FL	FR	RR
XV	1 100	Virago	1989 - 1993	FL	FR	
XV	1 100	Virago	1999 - 1999	RR		
XVS	1 100	A "Dragstar Classic"	2000 - 2007	RR		
XVS	1 100	Dragstar	1999 - 2004	RR		
FJ	1 200	(3CV/3XW Type)	1988 - 1995	RR		
FJ	1 200	(ITX Type)	1986 - 1987	FL	FR	RR
FJ	1 200	A (ABS Model)	1991 - 1995	RR		
V-MAX	1 200		1991 - 1992	FL	FR	RR
V-MAX	1 200		1993 - 2003	RR		
XJR	1 200		1995 - 1998	RR		
XJR	1 200	(Italy)	1995 - 1995	RR		
XV	1 200	DL, DC2	1984 - 1984	FL	FR	RR
XV	1 200	Venture Royale	1985 - 1985	FL	FR	RR
XVZ	1 200	12 TD	1985 - 1985	FL	FR	RR
XJR	1 300	(5EA1/5EA7) Brembo calipers (320 mm front disc)	1998 - 1999	RR		
XJR	1 300	/1300 SP	1999 - 2001	RR		
XJR	1 300	L 5EA2/5EA3/5EA4	1999 - 1999	RR		
XJR	1 300	M 5EAA/5EAB/5EAC	2000 - 2000	RR		
XJR	1 300	SP (L) 5EA5/5EA6/6EA8	1999 - 1999	RR		
XJR	1 300	SP (M) 5EAD/5EAE/5EAF	2000 - 2000	RR		
XJR	1 300	SP (N) 5EAL/5EAM/5EAN	2001 - 2001	RR		

EQUIVALENTS OEM

1FK W0045 00	1FK W0045 10	1FK W0046 02	1FK W0046 01	1UF W0045 00	1UF W0045 01	26H W0045 00
26H W0045 01	26H W0045 10	26H W0046 00	26H W0046 01	26H W0045 11	29L W0045 10	29L W0046 01
31A W0046 00	31A W0046 10	33M W0045 01	33M W0045 10	36H W0046 01	37A W0045 00	38A W0045 01
3HE W0045 00	3HE W0045 11	3XF W0045 00	43F W0045 00	47X W0045 00	47X W0045 01	4FM W0046 00
4FM W0045 10	4FM W0045 20	4FM W0045 30	4SV W0045 50			

AD	S3	S33 RACING

PART NUMBER

016

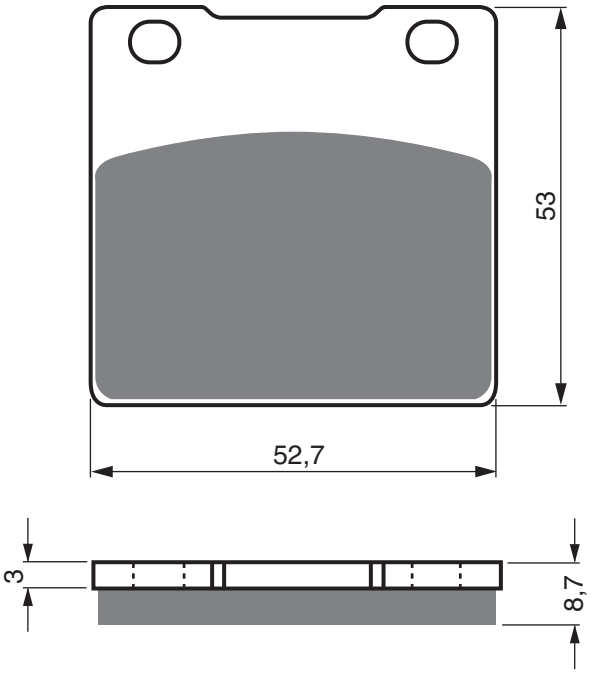

KAWASAKI

Z	250	A1/A2	1978 - 1980	RR			
Z	250	A3	1981 - 1981	RR			
ZXR	400	(L1-L9)	1991 - 2003	RR			
ZXR	400	H1/H2	1989 - 1990	RR			
ZXR	400	J1/J2	1989 - 1990	RR			
ZXR	400	R (ZX 400 M1-M4)	1991 - 1994	RR			
ZX-7R	750		1989 - 1995	RR			
ZX-7R	750	(ZX 750 P1/P2)/P3/P4/P5/P6/P7)	1996 - 2003	RR			
ZXR	750	H1/H2/J1/J2	1989 - 1992	RR			
ZXR	750	K1/L1/L2/L3/M1/M2	1993 - 1995	RL			
ZXR	750	R (ZX750H/F102)	1990 - 1992	RR			
ZXR	750	Ram-Air (ZX750L/G154)	1993 - 1995	RR			
ZRX	1 100	(ZR 1100 C1/C2/C3/C4)	1997 - 2000	RR			
ZZR	1 100	(ZX 1100 D1-D9	1993 - 2001	RR			
ZZR	1 100	(ZXT10D/G203)	1994 - 1994	RR			
ZZR	1 100	(ZXT10D/G203)	1997 - 2001	RR			
ZRX	1 200	R (A1/A2/A3/A4/A5/A6F)	2001 - 2008	RR			
ZRX	1 200	S (B1-B3)	2001 - 2004	RR			
ZX	1 200	(ZX 1200 B3/B4/B6F)	2004 - 2006	RR			
ZX-12R	1 200	(ZX 1200 A1/A2/B1/B2)	2000 - 2003	RR			
ZZR	1 200	C1H/C2H	2002 - 2004	RR			

MAGNI

	1 200	Sport S	2001 - 2001	RR			

SUZUKI

GSF	250	N/Z/M/P/NP/ZP/N/NR	1992 - 1996	RR			
GSF	250	VS/VT/VV/VVZ/VW/VX/VY Bandit (GJ77)	1995 - 2000	RR			
GSX	250	FL/FM/FN/FP/FR/FS/FT/FV/FW Across	1990 - 1998	RR			
GSX	250	R CH/H (GJ72A)		RR			
GSX	250	SSM Katana (GJ76A)	1991 - 1991	RR			
GSXR	250	CK		RR			
GSXR	250	J (GJ72A)		RR			
GSXR	250	RK (GJ73A)	1989 - 1989	RR			
RG	250	WD "Gamma"	1983 - 1983	FL	RR		
RG	250	WE/FG/CH/FCH/FH Gamma	1984 - 1988	RR			
RGV	250	J/K/L	1988 - 1990	RR			
TV	250	J (VJ21A) Wolf	1988 - 1988	RR			
TV	250	K/AK/L (VJ21A) Wolf	1989 - 1990	RR			
SG	350	N "Goose"	1992 - 1992	RR			
GSF	400	K/NK/Z/VM/VZM/P/NP/VP/VZP/VR (GK75A) "Bandit"	1989 - 1994	RR			
GSF	400	M/N/P Bandit	1991 - 1995	RR			
GSX	400	F FJ/FK/FAK/FL (GK74A)	1988 - 1990	RR			
GSX	400	FSV/FSK1 (GK7B) Inazuma	2000 - 2000	RR			
GSX	400	FW/FWS/FWS-2	1983 - 1983	FL	FR	RR	
GSX	400	R/S/T/ZR/ZS/ZT "Impulse Type"	1994 - 1996	RR			
GSX	400	R2/RG (GK71B/F)	1985 - 1986	RL			
GSX	400	SSN (GK77A) Katana	1992 - 1992	RR			
GSX	400	X Impulse	1999 - 1999	RR			
GSX	400	X/XA/XS Impulse		RR			
GSX-R	400	H	1987 - 1987	RL			
GSX-R	400	J/RR/RAK (GK73A)	1988 - 1990	RR			
GSX-R	400	RL/RM/RN/RP/RS (GK76A)	1990 - 1995	RL			
RF	400	RP/RR/VR/RT/RVT/RV-V (GK78A)	1993 - 1997	RR			
RG	400	EWF/EW-2G/EWH Walter Wolf (Type 1&2)	1985 - 1987	RR			
SV	400	N (VK53A)	1998 - 1998	RR			
SV	400	SN (VK53A)	1998 - 1998	RR			
SV	400	SX/SY/SK1/SK2	2000 - 2002	RR			
SV	400	X/Y/K1/K2	2000 - 2002	RR			
GS	500	EK/EL/EM/EN/EP/ER/ES	1989 - 1995	RR			
GS	500	ET/EV/EW/EX/EY/K1/K2/K3/FK4/FK5/K5/FK6/K6/ K7/FK7/K8/FK8	1996 - 2008	RR			
RG	500	G/CH	1985 - 1987	RR			
GSX	550	ESD/ESE/EFE/EFF/ESH/EFG	1984 - 1987	FL	FR	RR	
GSF	600	N, S Bandit (GN77B/H008)	1995 - 1999	RR			
GSF	600	SY/SK1/SK2/SK3/SK4 (Faired Bandit)	2000 - 2004	RR			
GSF	600	Y/K1/K2/K3/K4 (Naked Bandit)	2000 - 2004	RR			
GSX	600	FJ/FK/FL/FM/FN/FP/FR/FS/FT/FV	1988 - 1997	RR			

PART NUMBER

016

AD | S3 | S33 RACING

GSX	600	FW/FX/FY/FK1/FK2/FK3/FK4/FK5/FK6	1998 - 2006	RR		
GSX-R	600	K1/K2/K3/ZK3	2001 - 2003	RR		
GSX-R	600	V/W/X/Y	1997 - 2000	RR		
RF	600	RP/RR/RS/RT/RV	1993 - 1997	RR		
GSF	650	S/T/V/W/X Naked Bandit	1995 - 1999	RR		
GSX	650	ST/SV/SW/SX Faired Bandit	1995 - 1999	RR		
SV	650	SX/SY/SK1/SK2 Top Fairing Non ABS	1999 - 2002	RR		
SV	650	X/Y/K1/K2 Naked - Non ABS	1999 - 2002	RR		
GS	750	RF	1985 - 1985	RR		
GSX	750	ES (GR72A/D787)	1984 - 1985	FL	FR	RR
GSX	750	FK/FL/FM/FN/FPFR/FS/FT/FV	1989 - 1997	RR		
GSX	750	FW/FX/FY/FK1/FK2/FK3/FK4/FK5/FK6	1998 - 2006	RR		
GSX	750	RG	1989 - 1989	RR		
GSX	750	SE "Katana"	1985 - 1985	FL	FR	
GSX	750	W/X/Y/K1	1998 - 2002	RR		
GSX-R	750	F/G/H	1985 - 1987	RR		
GSX-R	750	J/K/L/M	1988 - 1991	RR		
GSX-R	750	R	1990 - 1991	RR		
GSX-R	750	T/V/W/X	1996 - 1999	RR		
GSX-R	750	WN/WP	1992 - 1993	RR		

GSX-R	750	WR/WS	1994 - 1995	RR		
GSX-R	750	Y/K1/K2/K3	2000 - 2003	RR		
GSXR	750	RG	1986 - 1986	RR		
RF	900	RT/RV/RW	1996 - 1998	RR		
TL	1 000	SV/SW/SX/SY/SK1	1997 - 2001	RR		
GSX	1 100	G (GV74A/F725)	1996 - 1996	RR		
GSX-R	1 100	G/H/J	1986 - 1988	RR		
GSX-R	1 100	K/L/M/N (GV73C/F024)	1989 - 1992	RR		
GSX-R	1 100	WP/WR/WS/WT	1993 - 1996	RR		
GSF	1 200	K1/K2/K3/K4/K5 "Naked Bandit" (6 Piston Caliper)	2001 - 2005	RR		
GSF	1 200	K3/SK3/K4/SK4/K5/SK5 "Bandit"	2003 - 2005	RR		
GSF	1 200	SAV Faired Bandit (ABS / 4 Piston Model)	1997 - 1997	RR		
GSF	1 200	SK1/SK2/SK3/SK4/SK5 "Faired Bandit" (6 Piston Caliper)	2001 - 2005	RR		
GSF	1 200	ST/SV/SW/SX/SY "Faired Bandit" (4 Piston Caliper)	1996 - 2000	RR		
GSF	1 200	T/V/W/X/Y "Naked Bandit" (4 Piston Caliper)	1996 - 2000	RR		
GSX	1 200	FSW/FSX Inazuma	1998 - 1999	RR		
GSX-R	1 300	RX/RY/RK1/RK2/RZK3/RK3/RK4/RK5/K6/K7 Hayabusa	1999 - 2007	RR		

EQUIVALENTS OEM

59100 16820	59130 16700	59130 16720	59130 16730	59130 16740	59130 16750	59130 16810
59130 30B00	59130 30B10	59130 30B20	59130 30B21	69100 05870	69130 16700	69130 16740
69130 20A10	69130 21E00	69100 05830	69100 05860	69100 05890	69100 06810	69100 20810
69100 21820	69130 27A10	69130 30B21	69130 33C00	69130 21820	69130 34C00	69100 34860
69101 05820	69100 05890	69100 0BE00	43082 1003	43082 1098	43082 1103	43082 1141
43082 1180	43082 1200	43082 1257	43082 1291			

AD | **S3** | **S33 RACING**

PART NUMBER

017

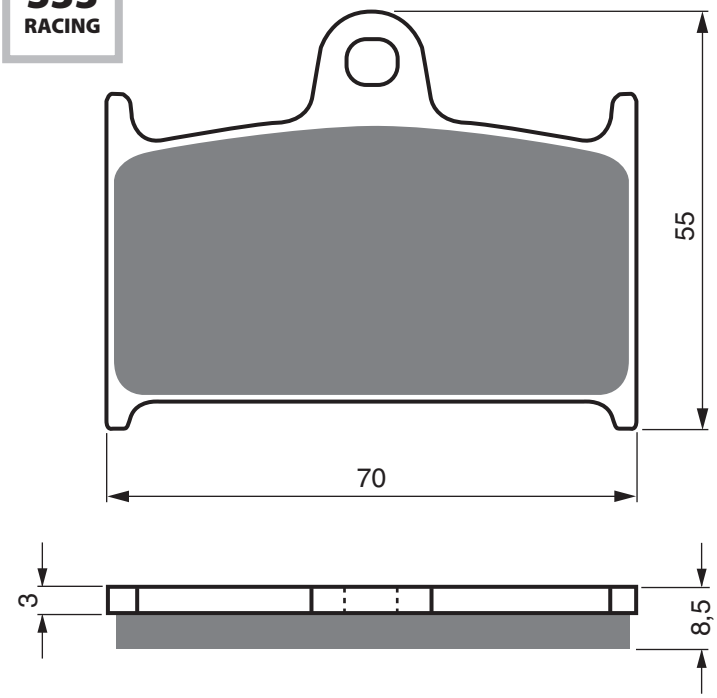

MZ

	1 000	(MUZ) S	2001 - 2002	FL	FR
	1 000	(MUZ)SN	2005 - 2007	FL	FR
	1 000	S	2003 - 2007	FL	FR
	1 000	SF	2005 - 2007	FL	FR
	1 000	SFX	2007 - 2007	FL	FR
	1 000	ST	2007 - 2007	FL	FR

NISSIN

		4 Piston Caliper		FL	

PGO

	125	Kung Fu		FL	

SUZUKI

GSX-R	400	RL/RM/RN/RP/RS (GK76A)	1990 - 1995	FL	FR
GSX-R	750	J/K/L/M	1988 - 1991	FL	FR
GSX-R	750	R	1990 - 1991	FL	FR
GSX-R	750	WN/WP	1992 - 1993	FL	FR
GSXR	750	RG	1986 - 1986	FL	FR
RF	900	RR/RS/RS2	1994 - 1995	FL	FR
RF	900	RT/RV/RW	1996 - 1998	FL	FR
GSX-R	1 100	K/L/M/N (GV73C/F024)	1989 - 1992	FL	FR
GSF	1 200	SAV Faired Bandit (ABS / 4 Piston Model)	1997 - 1997	FL	FR
GSF	1 200	ST/SV/SW/SX/SY "Faired Bandit" (4 Piston Caliper)	1996 - 2000	FL	FR
GSF	1 200	T/V/W/X/Y "Naked Bandit" (4 Piston Caliper)	1996 - 2000	FL	FR

TRIUMPH

		Sprint (All carb models from VIN 9083)	1994 - 1998	FL	FR
		Sprint RS (From VIN 139277) (Single sided swing arm up to VIN161317) (6bolt front disc)	2003 - 2004	FL	FR
		Sprint RS (From VIN139277) (6 bolt front Disc)	2002 - 2002	FL	FR
		Sprint RS (up to VIN139276) (6bolt front disc) (Double sided swing arm)	1999 - 2001	FL	FR
T595		Daytona	1997 - 1997	FL	FR
	600	Daytona	2003 - 2004	FL	FR
	600	Speedfour	2002 - 2005	FL	FR
TT	600		2000 - 2003	FL	FR
	650	Daytona	2005 - 2005	FL	FR
	750	Daytona (3cyl)	1992 - 1992	FL	FR
	750	Speed Triple (Carb Model)	1994 - 1996	FL	FR
T509	885	Speed Triple (EFi - 6 Bolt Front Disc)	1997 - 1998	FL	FR
	900	Daytona (3cyl)	1993 - 1996	FL	FR
	900	Speed Triple (Carb Model)	1994 - 1996	FL	FR
	900	Trophy (From VIN 9083)	1994 - 2001	FL	FR
	955	Daytona i	2005 - 2006	FL	FR
	955	Daytona i (6bolt front disc) (Single sided swinging arm)	1998 - 2000	FL	FR
	955	Daytona i (From VIN 132513) (5 bolt front disc single sided s/arm)	2001 - 2004	FL	FR
	955	Daytona i (From VIN132513) (5Bolt front Disc) (Double Sided s/arm)	2001 - 2004	FL	FR
	955	Speed Triple (EFi - 6 Bolt Front Disc)	1999 - 2004	FL	FR
	955	Sprint ST i (Non ABS) (Front Disc With offset / 6 Bolt Fixing)	1999 - 2004	FL	FR
T595	955	Daytona	1997 - 1997	FL	FR
	1 000	Daytona	1992 - 1992	FL	FR
	1 050	Sprint GT SE (ABS)	2010 - 2020	FL	FR
	1 050	Sprint i ST (ABS) (Front disc with zero offset)	2011 - 2012	FL	FR
	1 050	Sprint ST (5 Spoke Wheel / Non ABS Model / 5 Bolt Disc With offset)	2005 - 2010	FL	FR
	1 050	Sprint ST (5 Spoke Wheel/ ABS Model / 5 Bolt fixing Disc With offset)	2005 - 2010	FL	FR
	1 050	Sprint ST (Non ABS) (Front Disc With zero offset)	2011 - 2012	FL	FR
	1 200	Daytona	1993 - 1998	FL	FR
	1 200	Tiger Explorer	2012 - 2015	FL	FR
	1 200	Tiger Explorer XC	2013 - 2015	FL	FR
	1 200	Trophy (4cyl) (From VIN 4902)	1994 - 2001	FL	FR
	1 600	Thunderbird (1597cc)	2009 - 2018	FL	FR
	1 700	Thundebird Storm	2011 - 2018	FL	FR
	1 700	Thunderbird Commander (1699cc)	2014 - 2018	FL	FR
	1 700	Thunderbird LT (1699cc)	2014 - 2018	FL	FR
	1 700	Thunderbird Nightstorm	2015 - 2018	FL	FR
	1 700	Thunderbird Storm (1699cc)	2011 - 2018	FL	FR
	2 300	Rocket III	2004 - 2009	FL	FR
	2 300	Rocket III Classic	2007 - 2009	FL	FR
	2 300	Rocket III Roadster-ABS	2010 - 2018	FL	FR
	2 300	Rocket III Touring	2008 - 2009	FL	FR
	2 300	Rocket III Touring	2013 - 2017	FL	FR
	2 300	Rocket X	2015 - 2016	FL	FR

YAMAHA

TZ	125		1994 - 1997	FL	
TZ	250		1989 - 2001	FL	FR
FZR	750	R "OWOI"	1989 - 1990	FL	FR

EQUIVALENTS OEM

2020073 T0301	T2020193	T2020245	T2020246	59100 33830	59100 40810	59130 17C00
59130 33C00	59130 33C10	59130 40C00	59300 17810	59300 17811	3FV W0045 00	3LC 25811 00
3MW W0045 00	3TC W0045 00	9024020000	T2020393	T2020553		

PART NUMBER

018

AD	K1	K5	K5-LX	S3	S33 RACING

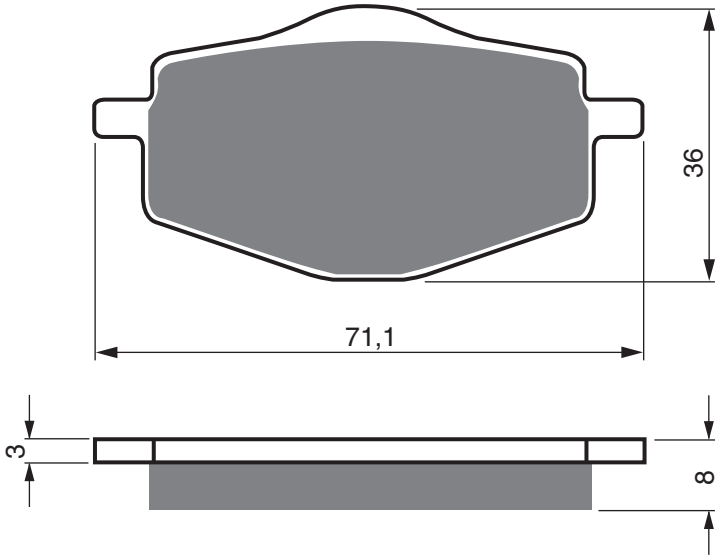

BETA				
	350	Euro	2003 - 2006	RR
	350	Jonathan	2003 - 2006	RR
BMW				
R65	650	(Double rotor model)	1988 - 1989	FR
CCM				
XTR	250		2009 - 2009	RR
CF MOTO				
CF	125	T-21A E-Charm	2010 - 2012	RR
CF	150	T-Si	2010 - 2011	RR
CF	250	T-5 V5 Custom	2011 - 2012	RR
GARELLI				
XO'E		(Electric)	2012 - 2012	RR
XO	125	i (TM 125 T)	2009 - 2012	RR
XO	150	i (TM 150 T)	2009 - 2012	RR
XO	200	i (TM 200 T)	2009 - 2012	RR
GILERA				
	125	Apache	1991 - 1991	RR
RC	125	Top Rally	1989 - 1992	RR
	250	Oregon Quad	2007 - 2007	FL
RC	600		1988 - 1988	RR
RC	600		1989 - 1990	RR
HERO				
	125	Quickster	2006 - 2006	FL
HM				
CRE	50	Six/Baja/Derapage (Brembo Caliper / Kayaba Forks)	1995 - 2002	RR
CRE	50	Six/Baja/Derapage (Grimeca caliper)	1995 - 2002	RR
CRE	50	Six/Baja/Derapage Brembo caliper / 41mm Paioli Forks	1995 - 2002	RR

ITALJET				
	100	Millennium	2000 - 2001	FL
	125	Millennium	2000 - 2001	FL
	150	Millennium	2000 - 2001	FL
LINHAI				
LH	50	Police (Scooter)	2007 - 2009	FL
	125	Eggy (Scooter)	2007 - 2009	FL
MALAGUTI				
	125	Blog ie	2009 - 2011	RR
	125	Centro ie/SL	2007 - 2011	RR
	160	Blog ie	2009 - 2011	RR
	160	Centro ie/SL	2007 - 2011	RR
MBK				
TZR	50	X-Power	2000 - 2000	RR
XC	125	Flame 125	1996 - 2003	FL
XC	150	Vertex	1997 - 1997	FL
MZ				
	660	SSR	1995 -	RR
NIPPONIA				
	100	Miro (4T)	2012 - 2013	FL
	125	Miro (4T)	2012 - 2014	FL
	130	Miro (4T)		FL
SACHS				
	50	Bee	2008 - 2010	FL
	125	Bee	2008 - 2009	FL
	650	Roadster	2005 - 2005	RR
SFM				
	50	Bee (2T)	2014 - 2015	FL
	125	Bee (4T)	2014 - 2015	FL

AD	K1	K5	K5-LX	S3	S33 RACING

PART NUMBER

018

SIAMOTO

KD	125		2000 - 2004	FL	

SINNIS

	125	Sublime	2009 - 2010	FL	

W.K.BIKES

WK	125	C (4T) (16" wheel)	2010 - 2015	RR	

YAMAHA

	50	Cygnus	1996 - 1996	FL	
DT	50	R (3MN/-)	1989 - 1995	FL	
TDR	50		1990 - 1990	FL	RR
TZM	50		1990 - 1992	RR	
TZM	50	R	1994 - 1994	RR	
TZR	50		1990 - 1992	RR	
TZR	50	Thunderkid (41V21) (5DU1/3)	1997 - 2000	RR	
YSR	50	A, B	1990 - 1991	FL	
YSR	50	D	1992 - 1992	FL	
YSR	50	T	1987 - 1987	FL	
DT	80	LC-2 (53V)	1985 - 1992	FL	
RD	80	LC (30W/D021)	1983 - 1983	FL	
YSR	80		1986 - 1986	FL	
DT	125	LC	1986 - 1987	FL	
DT	125	R	1988 - 2003	FL	RR
DT	125	R, Electric (4BL/F803)	1988 - 1988	FL	RR
DT	125	RE	2004 - 2004	FL	RR
DT	125	RE	2005 - 2007	FL	
TDR	125	(4GW/GX 1/2/3/4)	1993 - 2003	RR	
XC	125	TR Cygnus	1996 - 2003	FL	
YBR	125	ED (3D91)	2005 - 2006	FL	
YZ	125	U	1988 - 1988	RR	
XC	150	Fly One	1992 - 1992	FL	
XC	150	Fly One R	1998 - 1998	FL	
RT	180	G, H	1995 - 1996	FL	
DT	200	(2LR)	1987 - 1987	FL	
DT	200	R	1989 - 1989	FL	
DT	200	R	1989 - 1989	RR	
XT	225	(2LN) Serow (1KH 020101-)	1986 - 1987	FL	
XT	225	(3RW1-5 Serrow) (1KH 034101-132000)	1989 - 1993	FL	
XT	225	(4VW1/3/5/7/9)(4VWA/B/D/G/J/L)(Brasil)	1997 - 2006	FL	
XT	225	W (4JG1/2/3/4) Serrow	1993 - 1996	FL	
TY	250	Z (Scottish)	1996 - 1996	FL	
YTZ	250	N/S "TRI-Z"	1985 - 1986	FL	FR RR
YZ	250	U	1988 - 1988	RR	
XT	350		1985 - 1995	FL	
YFZ	350	T/U/W	1987 - 1989	FL	FR
XT	500		1986 - 1986	FL	
TT	600	N (59X) Frame #59X000101-59X007852	1985 - 1988	FL	
XT	600		1987 - 1990	RR	
XT	600	E	1992 - 1994	RR	
XT	600	E Supermotard with 320mm disc	1995 - 2003	RR	
XT	600	Z "Tenere"	1988 - 1990	RR	
XTZ	660	E "Tenere"	1991 - 1998	RR	

EQUIVALENTS OEM

1UY W0045 00	1UY W0045 01	1UY W0045 02	1UY W0045 03	2VN W0046 00	2VN W0046 01	34X W0046 00
34X W0046 01	34X W0046 02	38W W0045 00	38W W0045 01	3BN W0045 00	3BN W0045 01	3FY W0045 00
3XP W0045 00	3XP W0046 00	3JH W0045 00	3UH W0045 00	344 840	48 7100 7	4KL F5811 00
KA3495506	11969900	605 08 02 50				

PART NUMBER

019

AD	K1	K5	S3

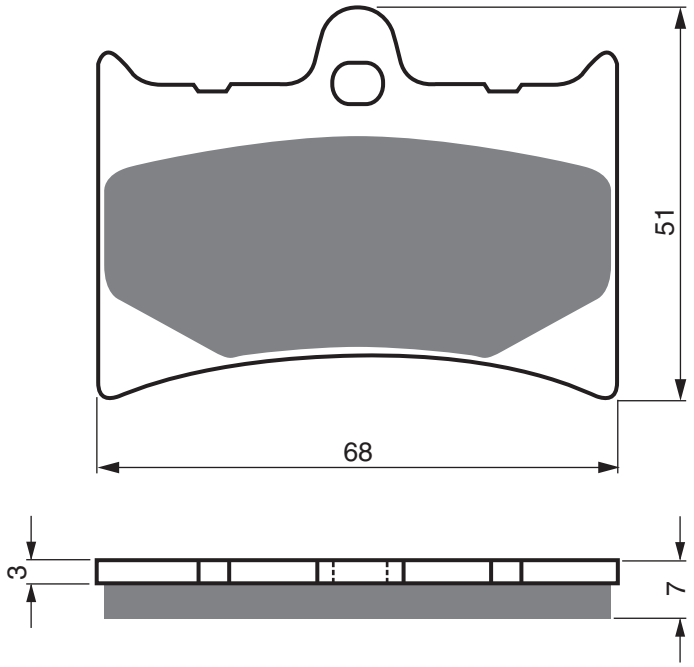

ALFER					
MC	125		1988 - 1988	FL	
GR	250	Enduro	1988 - 1988	FL	
MC	250		1988 - 1988	FL	
GR	300	Enduro	1988 - 1988	FL	
APRILIA					
	125	Tuono	2003 - 2004	FL	
AF-1	125		1989 - 1991	FL	
AF1	125		1988 - 1989	FL	
AF1	125		1990 - 1991	FL	
RS	125	(5 bolt rear disc/2T)	1999 - 2005	FL	
RS	125	(6 bolt rear disc / 2T)	1992 - 1998	FL	
BENELLI					
	50	Devil	1992 - 1992	FL	
	50	Spring	1993 - 1993	FL	
	80	Devil	1992 - 1992	FL	
	125	Tamo	1989 - 1989	FL	
BETA					
	350	Euro	2000 - 2001	FL	
	350	Euro	2002 - 2002	FL	
GILERA					
		Nordwest	1994 - 1994	FL	
		Nordwest	1995 - 1996	FL	
	125	CX	1991 - 1991	FL	
	125	MX1/MRX	1989 - 1989	FL	
	125	SP 01/ SP 02	1989 - 1989	FL	
GFR	125		1994 - 1994	FL	
KTM					
		Most Models	1987 - 1987	FL	RR
MX	250	VC, Enduro	1987 - 1987	FL	RR
EXC	350		1987 - 1987	FL	RR
GS	350		1987 - 1987	FL	RR
MX	350		1987 - 1987	FL	RR
	400	Enduro	1987 - 1987	FL	RR
MX	500		1987 - 1987	FL	RR
LC4	550		1987 - 1987	FL	RR
MX	550		1987 - 1987	FL	RR
MALAGUTI					
	125	Madison	1999 - 1999	RR	
MOTO-GUZZI					
	100	Quota D	1993 - 1995	FL	
	1 000	Quota	1992 - 1997	FL	FR
MZ					
		Scorpion Replica	1995 - 1996	FL	
	660	(MUZ) Scorpion Cup	1999 - 2002	FL	
	660	(MUZ) Scorpion Traveller	1999 - 2002	FL	

EQUIVALENTS OEM

8113489	000306546310	90214 01000	GU30654631

AD	S3	S33 RACING

PART NUMBER

020

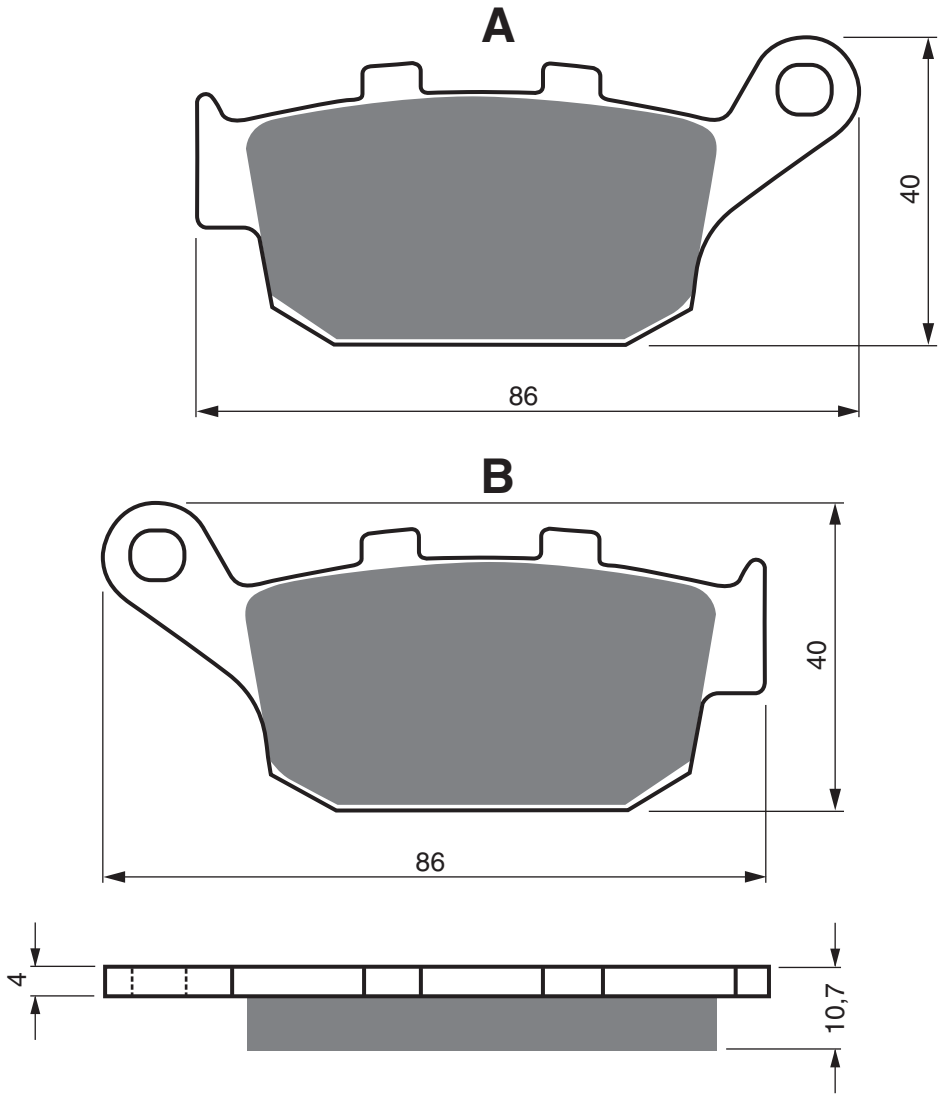

BUELL

	500	Blast	2000 - 2007	RR
XB9R	984	Firebolt	2002 - 2007	RR
XB9S	984	Lightning	2003 - 2004	RR
XB9SX	984	Lightning	2008 - 2010	RR
XB9SX	984	Lightning City X	2005 - 2009	RR
M2	1 200	Cyclone®	1998 - 2005	RR
S1	1 200	Lightning®	1998 - 2000	RR
S1	1 200	White Lightning®	1998 - 2000	RR
S3	1 200	Thunderbolt®	1998 - 2000	RR
S3T	1 200	Thunderbolt®	1998 - 2000	RR
X1	1 200	Lightning®	1998 - 2005	RR
XB12R	1 200	Firebolt	2004 - 2008	RR
XB12R	1 200	Firebolt	2009 - 2010	RR
XB12S	1 200	Lightning	2004 - 2008	RR
XB12SCG	1 200	Lightning	2006 - 2008	RR
XB12SCG	1 200	Lightning	2009 - 2010	RR
XB12SS	1 200	Lightning Long	2006 - 2008	RR
XB12SS	1 200	Lightning Long	2009 - 2010	RR
XB12STT	1 200	Lightning	2008 - 2008	RR
XB12STT	1 200	Super TT	2007 - 2010	RR
XB12X	1 200	Ulysses	2006 - 2010	RR
XT12XT	1 200	Ulysses	2008 - 2010	RR

HONDA

FES	125	3/4/5 Pantheon	2003 - 2006	RR
FES	150	3/4/5 Phantom	2003 - 2006	RR
CB	250	FT/FV/FX/FY/F1 Hornet	1996 - 2001	RR
CBR	250	RH (MC17)	1987 - 1987	RR
CBR	250	RJ/RK/RK2 (MC19)	1988 - 1989	RR
CBR	250	RRL/RRN/RRR (MC22)	1990 - 1994	RR
FES	250	Y/1/2/5 Foresight	2000 - 2005	RR
NSR	250	R5K/R5K-2 (MC18-110)	1989 - 1989	RR
NSR	250	R6K/R6K-2 (MC18-110)	1989 - 1989	RR
NSR	250	R7L/R7N (MC21-106)	1990 - 1990	RR
NSR	250	R8L-3 (MC21-101) R9L (MC21-102) R8N/R89N-3 (MC21-106)	1990 - 1992	RR
NSR	250	R9N (MC21-106)	1992 - 1992	RR
VT	250	FL Spada/Castec	1988 - 1990	RR
VTR	250	-9	2009 - 2010	RR
VTR	250	W/Y/1-7 (MC33)	1998 - 2007	RR
CB	400	Four V/V-II/W/W-II (NC36)	1997 - 1998	RR

PART NUMBER

020

AD | S3 | S33 RACING

CB	400	SF (F2N/F2R/F2S/F2T/F3S) Superfour (NC31)	1992 - 1995	RR
CB	400	SF (F2V/F3T) Superfour (NC31)	1996 - 1997	RR
CB	400	SF (F3V) Superfour (NC31)	1997 - 1997	RR
CB-1	400	(CB 400 F)	1989 - 1990	RR
CBR	400	RRJ/RRK (NC23) Tri-Arm (102/109)	1992 - 1993	RR
NT	400	Bros (NC25)	1988 - 1988	RR
VFR	400	RH2/RJ (NC24)	1987 - 1988	RR
CB	500	X (Non ABS)	2013 - 2020	RR
CB	500	XA (ABS)	2013 - 2020	RR
CBR	500	R (Non ABS/Twin)	2013 - 2020	RR
CBR	500	RA (ABS/Twin)	2013 - 2020	RR
NX	500	J/K/L/M	1988 - 1991	RR
NX	500	N/P/R/S/T Dominator	1992 - 1996	RR
NTV	600	J/K/M Revere	1988 - 1992	RR
XL	600	VM/VN/VP Trans Alp	1991 - 1993	RR
XL	600	VR/VT Trans Alp	1994 - 1996	RR
XL	600	VV/VW/VX Trans Alp	1997 - 1999	RR
FMX	650	(5/6)	2005 - 2008	RR
NT	650	J/K/L Bros	1988 - 1992	RR
NT	650	V/W	1997 - 1998	RR
NT	650	VW/VX/VY/V1 Deauville	1998 - 2001	RR
NTV	650	J/K/L/M/P/S/T/V	1988 - 1997	RR
NX	650	J/K/L/LII/M Dominator	1988 - 1991	RR
NX	650	N/P/R/S/T Dominator	1992 - 1996	RR
XL	650	VY/V1-V7 Transalp	2000 - 2007	RR
XRV	650	J Africa Twin	1988 - 1989	RR
CTX	700	DE-DCT	2014 - 2019	RR
CTX	700	N-DCT	2014 - 2019	RR
NC	700	S (Non ABS)	2012 - 2013	RR
NC	700	X (Non ABS)	2012 - 2013	RR
XL	700	V8/V9/VA Transalp (2 Piston Front Caliper/ ABS on Rear Disc)	2008 - 2011	RR
NM4	750	Vultus (NC750J)	2015 - 2019	RR
XRV	750	L/M/N Africa Twin	1990 - 1993	RR
XRV	750	P/R/S/T/V/W/X/Y Africa Twin	1994 - 2003	RR

KAWASAKI

KLE	650	Versys (KLE 650 EFF) (Non ABS)	2015 - 2015	RR
KLE	650	Versys (KLE 650 FFF) (ABS)	2015 - 2015	RR
Z	750	R (ZR 750 NBF/NCF) (Non ABS)	2011 - 2012	RR
Z	750	R ABS (ZR 750 PBF/PCF)	2011 - 2012	RR
Z	800	(Z800 ADS/AEF/AFF/AGF) (Non ABS)	2013 - 2020	RR
Z	800	(Z800 BDS/BEF/BFF/BGF) (ABS Model)	2013 - 2020	RR
Z	800	E (Z800 CDS/CEF/CFF/CGF) (Non ABS)	2013 - 2020	RR
Z	800	E (Z800 DDS/DEF/DFF/DGF) (ABS Model)	2013 - 2020	RR
Z	900	(ZR 900 AHF/AJF) (Non ABS)	2017 - 2020	RR
Z	900	(ZR 900 BHF/BJF/DJF) (ABS)	2017 - 2020	RR
Z	900	Café	2018 - 2020	RR
Z	900	RS	2018 - 2020	RR
Z	900	RS ABS (ZR 900 CJF/EJF ABS)	2018 - 2020	RR
Z	900	RS Café (CJFA/CJFB) (ABS)	2018 - 2020	RR

KREIDLER

	125	Street DD	2012 - 2013	RR

PEUGEOT

SV	250		2001 - 2002	RR

SINNIS

QM	125	-2D Stealth	2008 - 2010	RR

SUZUKI

XF	650	V/W/X/Y Freewind (AC/H674)	1997 - 2002	RR

TRIUMPH

	600	Daytona	2003 - 2004	RR
	600	Speedfour	2002 - 2005	RR
TT	600		2000 - 2003	RR
	650	Daytona	2005 - 2005	RR
	675	Daytona	2006 - 2008	RR
	675	Daytona Black Monobloc radial caliper	2009 - 2012	RR
	675	Daytona R (Brembo F/Nissin R calipers)	2011 - 2012	RR
	675	Street Triple (Naked)	2007 - 2012	RR
	675	Street Triple R	2009 - 2012	RR
	800	Tiger (Non ABS)	2011 - 2014	RR
	800	Tiger (With ABS)	2011 - 2014	RR
	800	Tiger XC (ABS)	2011 - 2020	RR
	800	Tiger XC (Non ABS)	2011 - 2014	RR
	800	Tiger XCa (ABS) from VIN 855532	2018 - 2020	RR
	800	Tiger XCa (ABS) up to VIN 855531	2015 - 2018	RR
	800	Tiger XCx (ABS) from VIN 855532	2018 - 2020	RR
	800	Tiger XCx (ABS) up to VIN 855531	2015 - 2018	RR
	800	Tiger XR (ABS)	2015 - 2018	RR
	800	Tiger XRt (ABS) from VIN 855532	2018 - 2020	RR
	800	Tiger XRt (ABS) up to VIN 855531	2015 - 2018	RR
	800	Tiger XRx (ABS) from VIN 855532	2018 - 2020	RR
	800	Tiger XRx (ABS) up to VIN 855531	2015 - 2018	RR
	900	Tiger	2020 - 2020	RR
	900	Tiger GT	2020 - 2020	RR
	900	Tiger GT Low	2020 - 2020	RR
	900	Tiger GT Pro	2020 - 2020	RR
	900	Tiger Rally	2020 - 2020	RR
	900	Tiger Rally Pro	2020 - 2020	RR
	955	Daytona i (From VIN132513) (5Bolt front Disc) (Double Sided s/arm)	2001 - 2004	RR
	1 200	Bonneville Bobber (Liquid Cooled)	2017 - 2020	RR
	1 200	Bonneville Bobber Black (Liquid Cooled)	2018 - 2020	RR
	1 200	Bonneville Speedmaster (Liquid Cooled)	2018 - 2018	RR

YAMAHA

YZF	600	RRR (R6)	2003 - 2004	RR

ZONTES

R	310		2020 - 2020	RR
T	310		2020 - 2020	RR
V	310		2020 - 2020	RR
X	310		2020 - 2020	RR

EQUIVALENTS OEM

06435 KFG J21	06435 KFK 016	06435 KT7 405	06435 KV3 405	42385 98Y	43105 KT7 761A	43105 KT7 762A
43106 KT7 761B	43105 KV3 831	43105 MN8 006	43106 KV3 831	43106 MN8 006	43105 MY1 405	43106 KT7 762B
69100 04830	T2020602	06435 KFG J21	754804	H0301 T	06435 MY9 405	06435 KFK 006
06435 MFF D01	20S W0046 00	06435 MGZ 501	43082 0117	T2025016		

AD | S3 | S33 RACING

PART NUMBER

021

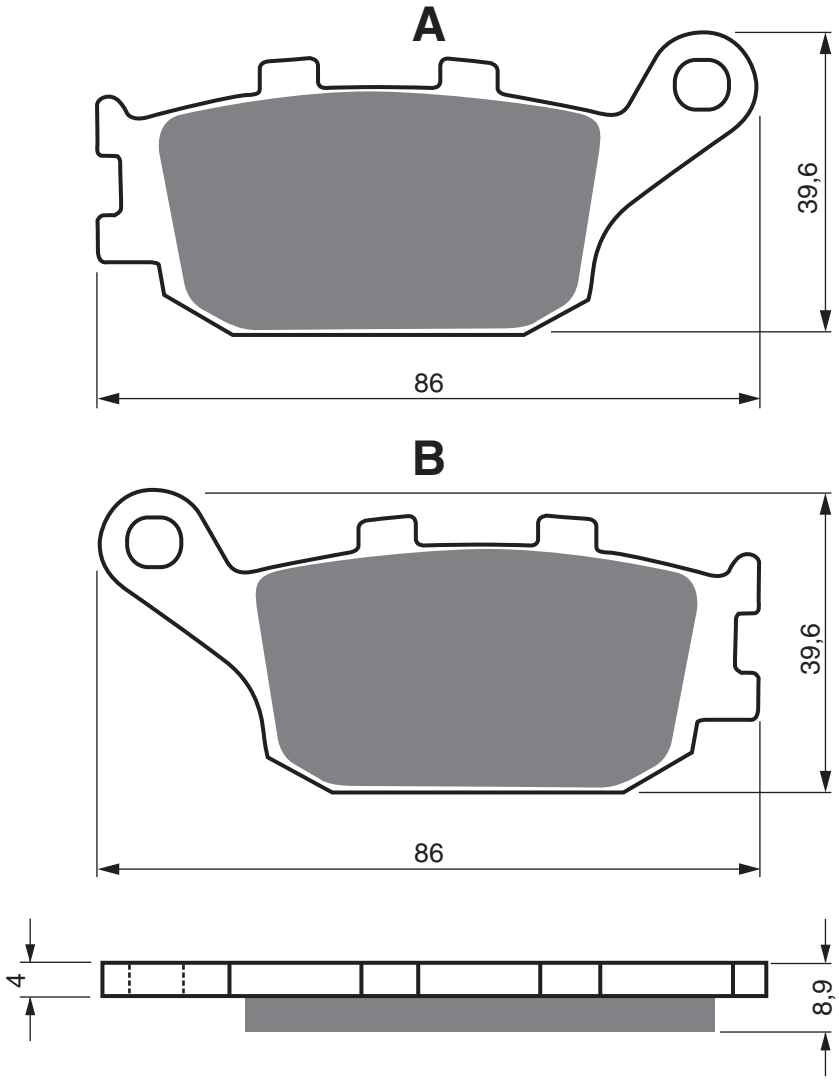

HONDA

CB	400	SF4/5/S5 (NC39 - Superfour/Superfour Bol D'Or)	2004 - 2005	RR
VRX	400	T (NC33)	1996 - 1996	RR
CBF	500	4 (Non ABS Model)	2004 - 2004	RR
CBF	500	A4/A5/A6/A7 (ABS Model)	2004 - 2007	RR
CB	600	F2Y/F21/F22 Hornet S (17" Wheels)	2000 - 2004	RR
CB	600	FA7/FA8/FA9/FAA/FAB/FAC Hornet (ABS)	2007 - 2013	RR
CB	600	FW/FX Hornet (16" Wheels)	1998 - 1999	RR
CB	600	FY/F1/F2/F3/F4/F5/F6 Hornet (17" Wheel)	2000 - 2006	RR
CBF	600	N4/N5/N6 (Non ABS)	2004 - 2006	RR
CBF	600	N8/N9/NA (Non ABS)	2008 - 2011	RR
CBF	600	NA4/NA5/NA6 (ABS Model)	2004 - 2006	RR
CBF	600	NA8/NA9/NAA (ABS)	2008 - 2011	RR
CBF	600	S4/S5 (Non ABS)	2004 - 2005	RR
CBF	600	S8/S9 (Non ABS)	2008 - 2009	RR
CBF	600	SA4/SA5/SA6/SA7 (ABS)	2004 - 2008	RR
CBF	600	SA8/SA9/SAA (ABS/Non ABS)	2008 - 2012	RR
CBR	600	F1/F2	2001 - 2002	RR
CBR	600	F3/F4/F5/F6	2003 - 2006	RR
CBR	600	FAB/FAC (ABS)	2011 - 2013	RR
CBR	600	FM/FN/FP/FR	1991 - 1994	RR
CBR	600	FS/FT/FV/FW	1995 - 1998	RR
CBR	600	FS1/FS2 "Sport"	2001 - 2002	RR
CBR	600	FX/FY	1999 - 2000	RR
CBR	600	RR3/RR4	2003 - 2004	RR
CBR	600	RR5/RR6 (Radial Caliper)	2005 - 2006	RR
NC	700	DC Integra Scooter	2012 - 2014	RR
NC	700	SA (ABS)	2012 - 2013	RR
NC	700	SD (ABS/DCT)	2012 - 2014	RR
NC	700	XA (ABS)	2012 - 2013	RR
NC	700	XD (ABS/DCT)	2012 - 2014	RR
XL	700	VA8/VA9/VAA Transalp (3 Piston Front Caliper/ ABS Front & Rear wheels)	2008 - 2011	RR
CB	750	F2N/F2R/F2S/F2T/F2V/F2W/F2X/F2Y/F21 CB Seven Fifty	1992 - 2002	RR
CB	900	F2/F3/F4/F5/F6/F7 Hornet	2002 - 2007	RR
CBR	900	RR2/RR3 Fireblade (954cc)	2002 - 2003	RR
CBR	900	RRN/RRP Fireblade (893cc)	1992 - 1993	RR
CBR	900	RRR/RRS Fireblade /893cc)	1994 - 1995	RR
CBR	900	RRT/RRV Fireblade (918cc)	1996 - 1997	RR
CBR	900	RRW/RRX Fireblade (918cc)	1998 - 1999	RR
CBR	900	RRY/RR1 Fireblade (929cc)	2000 - 2001	RR
CB	1 000	FP/FR/FS/FT/FV	1993 - 1997	RR

PART NUMBER

021

AD | S3 | S33 RACING

CBF	1 000	6/7/8/9/A (2 piston front calipers / Non ABS Model)	2006 - 2011	RR
CBF	1 000	F (FA) (2 piston front calipers /Non ABS)	2010 - 2015	RR
CBF	1 000	FA FAA (3 Piston Front Caliper / ABS Model)	2010 - 2015	RR
CBF	1 000	FS FSA (3 Piston Front Caliper / ABS Model)	2010 - 2011	RR
CBF	1 000	FT FTA (3 Piston Front Caliper / ABS Model)	2010 - 2011	RR
CBR	1 000	RR4/RR5 Fireblade	2004 - 2005	RR
CRF	1 000	Africa Twin ABS	2016 - 2017	RR
CRF	1 000	Africa Twin ABS DCT	2016 - 2020	RR
VTR	1 000	FV/FW/FX/FY/F1/F2/F3/F4/F5/F6 Firestorm	1997 - 2006	RR
VTR	1 000	SP2/SP3/SP4/SP5/SP6 (SP2)	2002 - 2007	RR
VTR	1 000	SPY/SP1 (SC45) (SP1)	2000 - 2001	RR
CB	1 100	AD (Cast Wheels / 3 Piston Caliper)	2013 - 2013	RR
CB	1 100	AE (Cast Wheels / 4 piston Caliper)	2014 - 2014	RR
CB	1 100	EX (SAE)	2014 - 2018	RR
CB	1 100	RS	2017 - 2017	RR
CB	1 100	RS	2018 - 2018	RR
CRF	1 100	Africa Twin Adventure Sport ES ABS (DCT)	2018 - 2020	RR
CRF	1 100	Africra Twin Adventure Sport ES ABS (Manual)	2018 - 2020	RR
VT	1 100	C2 (S/T/V/W/X/Y/1/2/3/4/5)	1995 - 2005	RR
VT	1 100	C3 (W/X/Y)	1998 - 2000	RR
CB	1 300	5/6/7/8/9 (Superfour)	2005 - 2009	RR
CB	1 300	A5/A6/A7/A8/A9 (Superfour ABS)	2005 - 2009	RR
CB	1 300	F3/F13	2003 - 2004	RR
CB	1 300	S5/S6/S7/S8/S9	2005 - 2009	RR
CB	1 300	SA5/SA6/SA7/SA8/SAA	2005 - 2010	RR
VT	1 300	CXA (Fury/Chopper) (9 spoke wheel/Non ABS)	2010 - 2020	RR
VT	1 300	CXAA (Fury/Chopper) (9 spoke wheel/ABS model)	2010 - 2020	RR
VTX	1 300	C/T (Cast Wheel Models)	2003 - 2008	RR
VTX	1 300	S (Spoke Wheel Models)	2003 - 2008	RR

KAWASAKI

ZX-25	250	Ninja	2020 - 2020	RR
EN	650	Vulcan S (ABS)	2015 - 2020	RR
EN	650	Vulcan S (Non ABS)	2015 - 2020	RR
EN	650	Vulcan S Café (ABS)	2018 - 2020	RR
EN	650	Vulcan S SE (ABS)	2018 - 2020	RR
EX	650	Ninja (ABS)	2017 - 2020	RR
EX	650	Ninja (KRT)	2018 - 2020	RR
EX	650	Ninja (Non ABS)	2017 - 2020	RR
KLE	650	Versys (ABS) (KLE650 FGF/FHF/FHFA/FJF/FJFA)	2016 - 2020	RR
KLE	650	Versys (Non ABS) (KLE650 EGF)	2016 - 2016	RR
Z	650	(ER 650 GHF) (Non ABS)	2017 - 2020	RR
Z	650	(ER 650 HHF/HJF) (ABS)	2017 - 2020	RR
Z	750	(ZR 750 L7F/L8F/L9F/LAF/LAB)	2007 - 2011	RR
Z	750	ABS (ZR 750 M7F/M8F/M9F/MAF/MBF)	2007 - 2011	RR
KLV	1 000	(LV 1000 A1H/A2H)	2004 - 2005	RR
KLX	1 000	Versys LT ABS	2018 - 2020	RR
KLX	1 000	Versys SE LT ABS	2018 - 2020	RR
KLX	1 000	Versys SE LT+ ABS	2018 - 2020	RR
KLZ	1 000	ACF/ADF/AEF/BFF/B6F Versys	2012 - 2018	RR
KLZ	1 000	SE LT Versys (BJF) (ABS)	2018 - 2020	RR
KLZ	1 000	Versys SE LT + ABS Inc DKF	2019 - 2020	RR
Z	1 000	(ZR 1000 B7F/B8F/B9F)	2007 - 2009	RR
Z	1 000	ABS (ZR 1000 C7F/C8F/C9F)	2007 - 2009	RR

SUZUKI

SV	400	K3/K4/K5	2003 - 2005	RR
SV	400	SK3/SK4/SK5	2003 - 2005	RR
DL	650	AK7/AK8/AK9/AL0 V-Strom ABS	2007 - 2011	RR
DL	650	AK9 GT V-Storm Traveller ABS	2009 - 2011	RR
DL	650	AL1 XP V-Strom Expedition	2011 - 2011	RR
DL	650	AL2/AL3/AL4/AL5/AL6/AL7/AL8/AL9 V-Strom ABS	2012 - 2020	RR
DL	650	K4/K5/K6 V-Strom	2004 - 2006	RR
DL	650	XK7/XK8/XK9/XL0 V-Strom X	2007 - 2011	RR
DL	650	XT V-Strom Touring ABS	2018 - 2020	RR
DL	650	XT XAL5/XAL6/XAL7/XAL8/XAL9 V-Strom ABS	2015 - 2020	RR
GSF	650	AK5/AK6 Naked Bandit - ABS	2005 - 2006	RR
GSF	650	AK7/AK8/AK9/AK0/AL1/AL2 Naked Bandit ABS	2007 - 2012	RR
GSF	650	K6/SAK6/K7/SAK7(Bandit ABS)	2007 - 2007	RR
GSF	650	K7/K8/K9/L0/L1/L2 Naked Bandit / Non ABS	2007 - 2012	RR
GSF	650	SAK5/SAK6 Faired Bandit ABS	2005 - 2006	RR
GSF	650	SAK7/SAK8/SAK9/SAL0/SAL1/SAL2 Faired Bandit ABS	2007 - 2015	RR
GSX	650	FAK8/FAK9/FAL0/FAL1/FAL2 (ABS Model)	2008 - 2015	RR
GSX	650	FK8/FK9/FL0/FL1/FL2	2008 - 2012	RR
GSX	650	SK7/SK8/SK9 Faired Bandit / Non ABS	2007 - 2009	RR
SV	650	AK7/AK8/AK9/AL0 Naked - ABS	2007 - 2010	RR
SV	650	K3/K4/K5/K6/K7/K8/K9/L0 Naked - Non ABS	2003 - 2010	RR
SV	650	SAK7/SAK8/SAK9/SAL0	2007 - 2015	RR
SV	650	SK3/SK4/SK5/SK6/SK7/SK8/SK9/SL0 Top Fairing - Non ABS	2003 - 2015	RR
GSR	750	AL2/AL3/AL4/AL5 (ABS)	2011 - 2015	RR
GSR	750	L1/L2/L3/L4/L5/L6 (Non ABS)	2011 - 2016	RR
GSX-S	750	AL7/AZL7/AL8/AZL8/AL9/AZL9	2017 - 2020	RR
DL	900	Migrator	2014 - 2019	RR
DL	1 000	K2/K3/K4/K5/K6/K7/K8/K9/L0 V-Strom	2002 - 2010	RR
DL	1 000	V-Strom ABS Adventure AL2	2012 - 2013	RR
GSX	1 000	Katana	2019 - 2020	RR
GSX-S	1 000	AL6/AL7/AL8/AL9 (Naked/ABS)	2016 - 2020	RR
GSX-S	1 000	FAL6/FAL7/FAL8/FAL9 (Faired/ABS)	2016 - 2020	RR
GSX-S	1 000	FL6/FL7/FL8/FL9 (Faired/Non ABS)	2016 - 2020	RR
GSX-S	1 000	L6/L7/L8/L9 (Naked/Non ABS)	2016 - 2020	RR
SV	1 000	K3/K4/K5/K6/K7	2003 - 2007	RR
SV	1 000	SK3/SK4/SK5/SK6/SK7 Faired Model	2003 - 2007	RR
GSF	1 200	K6/AK6 "Naked Bandit" (ABS & Non ABS Models / 4 Piston Caliper)	2006 - 2006	RR
GSF	1 200	SK6/SAK6 "Faired Bandit" (ABS & Non ABS Models / 4 Piston Caliper)	2006 - 2006	RR
GSF	1 250	AK7/AK8 ABS Model Naked Bandit 4 Piston Caliper	2007 - 2008	RR
GSF	1 250	K6/AK6 ABS & Non ABS Naked Bandit 4 Piston Caliper	2006 - 2006	RR
GSF	1 250	K7/K8/K9/0L0 Non ABS Naked Bandit 4 Piston Caliper	2007 - 2011	RR
GSF	1 250	SAK7/SAK8/SAK9/SAZK9/SAL0/SAL1/SAL2/SAL4/SAL5/SAL6 Faired Bandit (4 Piston Caliper) (ABS)	2007 - 2016	RR
GSF	1 250	SK6/SAK6 ABS & Non ABS Faired Bandit 4 Piston Caliper	2006 - 2006	RR
GSF	1 250	SK7/SK8/SK9/SL0 Faired Band Non ABS 4 Piston Caliper	2007 - 2010	RR
GSX	1 250	FAL0/FAL1/FAL2/FAL4/FAL5/FAL6	2010 - 2016	RR
GSX	1 250	FAL0ST/FAL1ST Sports Tourer	2010 - 2014	RR

YAMAHA

FZ6	600	(Naked Version)	2004 - 2007	RR
FZ6	600	Fazer	2004 - 2007	RR
FZ6	600	Fazer (ABS/Half Fairing/ 2 Piston Caliper)(4P5)	2006 - 2007	RR
FZ6	600	Fazer (Half Fairing/Non ABS/ 2 Piston Caliper) (5VX/5VXL)	2004 - 2007	RR
FZ6	600	Fazer S2 (ABS) (4 Piston Caliper)	2007 - 2009	RR
FZ6	600	Fazer S2 (ABS/Half Fairing/4 piston caliper) (5S2)	2008 - 2008	RR
FZ6	600	Fazer S2 (Non ABS/Half Fairing/4 Piston Caliper) (4S81/4S8)	2007 - 2009	RR
FZ6	600	Naked/Non ABS/ 2 Piston Caliper (1B3/1B3D)	2004 - 2007	RR
FZ6	600	NS Naked / Non ABS/2 Piston Caliper	2005 - 2006	RR
FZ6	600	S2 (Naked / Non ABS/4 Piston Caliper) (5S51/5S5)	2007 - 2009	RR
FZ6	600	S2 ABS (Naked)	2007 - 2009	RR
XJ6	600	Diversion (ABS)	2009 - 2009	RR
XJ6	600	Diversion (Non ABS)	2009 - 2009	RR
XJ6	600	SP	2013 - 2013	RR
XJ6-F	600	Diversion (Full Fairing - 1CW1) (Non ABS/ABS)	2010 - 2015	RR
XJ6-N	600	(Naked 20S) (Non ABS/ABS)	2009 - 2015	RR
XJ6-S	600	Diversion (Top Fairing - 36) ABS and Non ABS Version	2009 - 2015	RR
YZF	600	"R6"	2003 - 2004	RR
YZF	600	R-6	2005 - 2007	RR
YZF	600	R6 (13S1)	2008 - 2016	RR
MT-07	700	(689cc/2 Cyl) Non ABS	2014 - 2016	RR

AD | S3 | S33 RACING

PART NUMBER

021

MT-07	700	Moto Cage (ABS/2 Cyl)	2015 - 2017	RR
MT-07A	700	(689cc/2Cyl) ABS	2014 - 2018	RR
MT-07A	700	Moto Cage (Non ABS)	2014 - 2016	RR
Tracer	700	(MTT 690)	2016 - 2020	RR
XSR	700	ABS (MTM 690-U)	2016 - 2020	RR
XSR	700	ABS Xtribute	2019 - 2020	RR
FZ8	800	(Single Headlight)	2010 - 2015	RR
FZ8	800	N-Naked/Single Headlight/Non ABS (RN255/39P1)	2011 - 2015	RR
FZ8	800	NA-Naked/Single Headlight/ ABS (RN256/59P1)	2011 - 2015	RR
FZ8-S	800	Fazer 8 (Top fairing/Twin headlight/Non ABS) (RN251/42P1)	2011 - 2015	RR
FZ8-SA	800	Fazer 8 (Top fairing/Twin headlight/ ABS) (RN252/1BD1)	2011 - 2015	RR
MT-09	900	(1RC) Non ABS (847cc/3cyl)	2014 - 2016	RR
MT-09	900	(2DR) ABS (847cc/3cyl)	2014 - 2016	RR
MT-09	900	A Sport Tracker (ABS) (847cc/3cyl)	2014 - 2016	RR
MT-09	900	ABS (MT850-A 847cc/ 3 Cyl Engine)	2017 - 2020	RR
MT-09	900	SP ABS (MT850-D 847cc/3 Cyl Engine)	2018 - 2020	RR
MT-09	900	SR Street Rally ABS (847cc/3cyl)	2014 - 2016	RR
MT-09	900	Tracer (ABS847cc/3 Cyl engine)	2015 - 2020	RR
MT-09 Tracer	900	GT ABS (847cc/3 Cyl Engine)	2018 - 2018	RR
XSR	900	(ABS) (MTM850)	2016 - 2020	RR
XSR	900	Abarth ABS (MTM 850)	2017 - 2018	RR
FZ1	1 000	Fazer (Half Fairing - ABS - 5D0)	2008 - 2015	RR
FZ1	1 000	Fazer (Half Fairing / Non ABS)	2006 - 2015	RR
FZ1	1 000	N/NA Naked (Non ABS/ABS)	2010 - 2015	RR
FZ1	1 000	N/NV (2D11/2/3)	2006 - 2009	RR
FZ1	1 000	S/FZ1-SV	2006 - 2009	RR
MT-10	1 000	(MTN 1000/998cc)	2016 - 2020	RR
MT-10	1 000	SP (MTN 1000D/998cc)	2017 - 2020	RR
MT-10	1 000	Tourer Edition (998cc)	2018 - 2020	RR
YZF	1 000	R1	2002 - 2003	RR
YZF	1 000	R1	2004 - 2006	RR
YZF	1 000	R1 (6 piston radial caliper)	2007 - 2014	RR
YZF	1 000	R1 (Rad.cal.) (4-pad) ABS	2012 - 2014	RR
YZF	1 000	R1 50th Anniversary	2006 - 2006	RR
YZF	1 000	R1 SP	2006 - 2006	RR

EQUIVALENTS OEM

43105 MW0 405	T2020602	5SL W0046 00	06435 KV3 405	69100 06830	06435 MEE 006	69100 06820
69100 08850	06435 MEJ 006	06435 MEJ 016	5VX W0045 00	43020 S020	69100 16851	43082 0073
5VX25806 00	06435 MGS D3	43082 0155	69100 0886	43105 MWO 425	5VX W0046 00	43082 0166
69100 16852						

PART NUMBER

022

AD	S3	S33 RACING	GP5	GP6	GP7	GPR

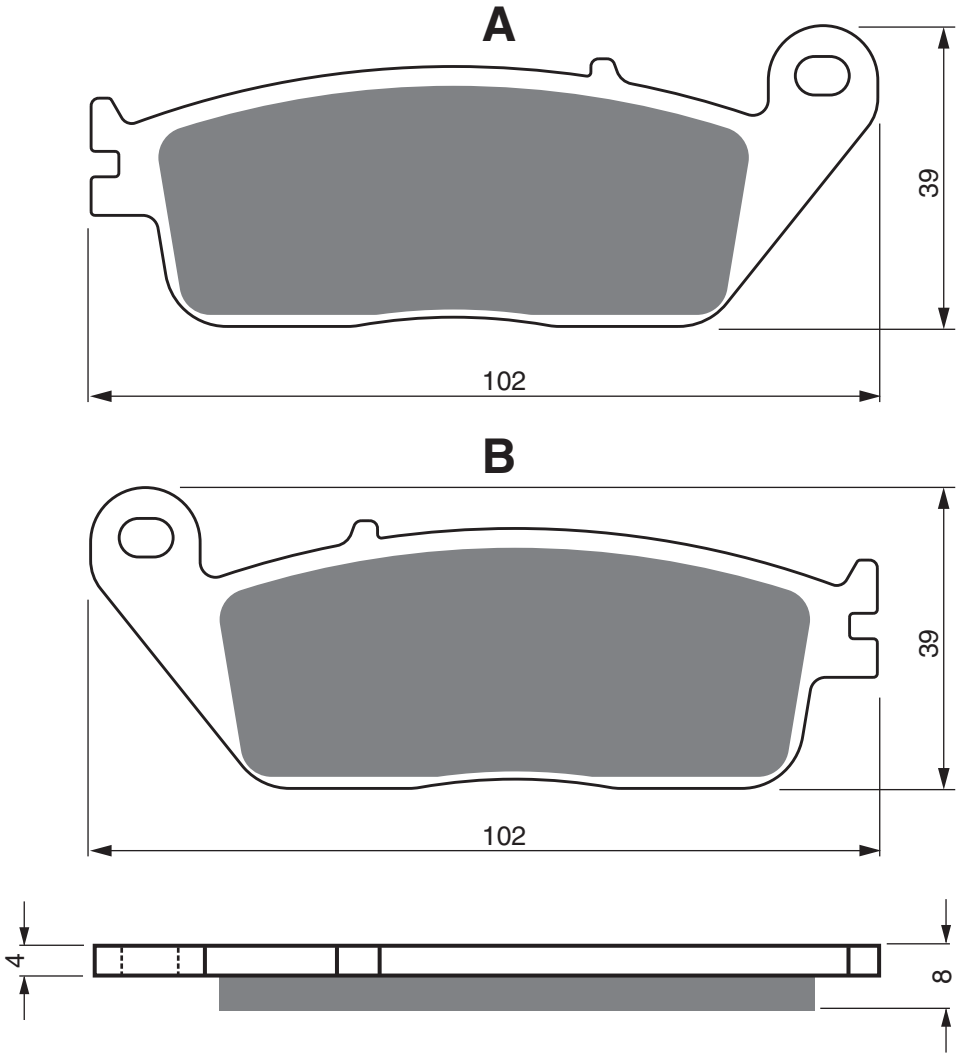

BENELLI					
	500	Leoncino Trail	2018 - 2019	FL	
BMW					
C		Evolution (Scooter)	2014 - 2018	FL	
C		Evolution Electric	2018 - 2020	FL	FR
C	600	Sport Evolution Scooter	2014 - 2020	FL	FR
C	600	Sport Highline	2013 - 2015	FL	FR
C	600	Sport Scooter	2012 - 2015	FL	FR
C	650	GT Highline	2013 - 2018	FL	FR
C	650	GT Scooter	2012 - 2018	FL	FR
C	650	Sport Scooter	2016 - 2020	FL	FR
CAGIVA					
IE	900	Canyon / Gran Canyon	1998 - 2000	FL	FR
	1 000	Navigator	2000 - 2005	FL	FR

DAELIM					
SQ	125	Freewing A2	2006 - 2006	FL	
SQ	250	Freeway S2	2006 - 2006	FL	
VJF	250	Roadsport	2010 - 2014	FL	FR
VJF	250	Roadwin R Fi	2008 - 2010	FL	FR
VL	250	Daystar	2013 - 2014	FL	FR
GENERIC					
TW	125	SM	2013 - 2015	FL	
HONDA					
CBR	250	RB/RC (Non ABS)	2011 - 2013	FL	
CBR	250	RJ/RK/RK2 (MC19)	1988 - 1989	FL	
CBR	250	RRL/RRN/RRR (MC22)	1990 - 1994	FL	FR
VT	250	FL Spada/Castec	1988 - 1990	FL	
CBR	300	RAE (ABS)	2014 - 2014	FL	

AD | S3 | S33 RACING | GP5 | GP6 | GP7 | GPR

PART NUMBER

022

CB	400	Four V/V-II/W/W-II (NC36)	1997 - 1998	FL	FR
CB	400	SF (F2N/F2R/F2S/F2T/F3S) Superfour (NC31)	1992 - 1995	FL	FR
CB-1	400	(CB 400 F)	1989 - 1990	FL	
CBR	400	RRJ/RRK (NC23) Tri-Arm (102/109)	1992 - 1993	FL	FR
CBR	400	RRL/RRN/RRR (NC29) Gull-Arm	1990 - 1994	FL	FR
NV	400	CS/CV Steed	1995 - 1997	FL	
XR	400	M (ND08/NC38E) Supermotard	2006 - 2008	FL	
NTV	600	J/K/M Revere	1988 - 1992	FL	
VT	600	CR/CS/CT/CV/CW/CX Shadow Custom	1994 - 2000	FL	
CB	650	F (ABS)	2014 - 2020	FL	FR
CB	650	FE/FG	2014 - 2016	FL	FR
CBR	650	F (Non ABS)	2014 - 2020	FL	FR
CBR	650	FA (ABS)	2014 - 2020	FL	FR
NTV	650	J/K/L/M/P/S/T/V	1988 - 1997	FL	
CB	750	F2N/F2R/F2S/F2T/F2V/F2W/F2X/F2Y/F21 CB Seven Fifty	1992 - 2002	FL	FR
CBR	750	FJ Superaero (RC27)	1988 - 1988	FL	FR
VFR	750	FJ/FK	1988 - 1989	FL	FR
VFR	750	FL/FM/FN/FP	1990 - 1993	FL	FR
VFR	750	FR/FS/FT/FV	1994 - 1997	FL	FR
PC	800	Pacific Coast	1989 - 1997	FL	FR
CBR	1 000	FK/FL/FM/FN	1989 - 1992	FL	FR
ST	1 100	AN/AP/AR/AS Pan European (ABS Model)	1992 - 1995	FL	FR
ST	1 100	L/M/N/P/R/S Pan European (Non ABS)	1990 - 1995	FL	FR
ST	1 100	T/V/W/X/Y/1/2 Pan European (Non ABS)	1996 - 2002	FL	FR
GL	1 500	CV/CW/CX/CY/C1/C2 (F6C)	1997 - 2003	FL	FR
HYOSUNG					
	125	V2	1999 - 1999	FL	
ITALJET					
	400	cc Marco Polo Scooter	2007 - 2009	FL	FR
JAWA					
	350	Californian	2009 - 2010	FL	
	350	New Classic	2013 - 2014	FL	
KAWASAKI					
J	125	ABS (SC125 AGF/BGF/CGF/CHF/CJF)	2016 - 2018	FL	
J	125	SE/ABS (SC125 AGFA/BGFA/CGFA/CHFA/CJFA)	2016 - 2018	FL	
J	300	AEF/AFF/AGF (Non ABS)	2014 - 2016	FL	
J	300	AEFA/AFFA Special Edition (Non ABS)	2014 - 2016	FL	
J	300	BEF/BFF/BGF/CHF/CJF (ABS Model)	2014 - 2020	FL	
J	300	BEFA/BFFA/BGFA/CHFA/CJFA Special Edition (ABS Model)	2014 - 2020	FL	
KLE	300	BHF Versys-X (Non ABS)	2017 - 2020	FL	
KLE	300	CHF/CJF Versys-X (ABS)	2017 - 2020	FL	
KLE	650	Versys (ABS) (KLE650 FGF/FHF/FHFA/FJF/FJFA)	2016 - 2020	FL	FR
KLE	650	Versys (KLE 650 EFF) (Non ABS)	2015 - 2015	FL	FR
KLE	650	Versys (KLE 650 FFF) (ABS)	2015 - 2015	FL	FR
KLE	650	Versys (Non ABS) (KLE650 EGF)	2016 - 2016	FL	FR
Z	650	(ER 650 GHF) (Non ABS)	2017 - 2020	FL	FR
Z	650	(ER 650 HHF/HJF) (ABS)	2017 - 2020	FL	FR
Z	750	(ZR 750 L7F/L8F/L9F/LAF/LAB)	2007 - 2011	FL	FR
Z	750	ABS (ZR 750 M7F/M8F/M9F/MAF/MBF)	2007 - 2011	FL	FR
Z	800	E (Z 800 CDS/CEF/CCF) (Non ABS)	2013 - 2016	FL	FR
KYMCO					
	125	Grand Dink	2012 - 2013	FR	
	125	Grand Dink	2014 - 2015	FL	
	125	i Downtown (C21000)	2009 - 2015	FL	
	125	i Super Dink (C21000)	2009 - 2015	FL	
K-XCT	125	i	2012 - 2015	FL	
	200	i Downtown	2010 - 2015	FL	
	250	i X-Citing (T71000)	2006 - 2008	FL	
	250	People	2003 - 2006	RR	
	250	X-Citing	2005 - 2005	FL	
	300	Grand Dink i	2012 - 2020	FR	
	300	i Downtown (V20000)	2009 - 2012	FL	
	300	i Downtown (ABS/C20010)	2010 - 2015	FL	
	300	Super Dink i (V20000)	2009 - 2012	FL	
	300	X-Citing i (T72000 - EFi Model)	2008 - 2008	FL	
	300	X-Citing i R (T720001/T72011)	2009 - 2014	FL	
	500	X-Citing (T70000) (Carb Model)	2005 - 2005	FL	FR
	500	X-Citing Evo i ABS	2013 - 2013	FL	
	500	X-Citing i (T70020) (EFi Model)	2006 - 2008	FL	FR
	500	X-Citing Ri (T70021)(EFi Model)	2009 - 2015	FL	FR
	700	i Myroad	2008 - 2008	FL	FR RR
	700	i Myroad	2009 - 2011	FL	FR
MX	700	My Road i	2012 - 2015	FL	FR
MASH					
	400	Family Side x Side Car Outfit	2018 - 2020	FL	
	400	Roadstar (Five Hundred)	2014 - 2020	FL	
	400	Scrambler (Dirtstar 400)	2017 - 2020	FL	
PEUGEOT					
	300	Geopolis GT	2014 - 2014	FL	
	400	Satelis 2 (4T)	2014 - 2015	FL	FR
	400	Satelis Premium (Nissin Calipers)	2008 - 2011	FL	FR
	400	Satelis RS (Nissin Calipers)	2008 - 2014	FL	FR
	400	Satelis Urban (Nissin Calipers/ABS)	2008 - 2012	FL	FR
RS	400	Satelis 2	2014 - 2015	FL	FR
	500	Geopolis	2008 - 2011	FL	
	500	Satelis	2007 - 2012	FL	FR
	500	Satelis RS (Nissin Calipers)	2008 - 2012	FL	FR
SACHS					
	400	Quattrocento	2008 - 2008	FL	FR
SUZUKI					
GW	250	FL5 Inazuma	2015 - 2015	FL	
GW	250	L3/ZL5 Inazuma	2013 - 2015	FL	
GSX	400	R/S/T/ZR/ZS/ZT "Impulse Type"	1994 - 1996	FL	FR
RF	400	RP/RR/VR/RT/RVT/RV-V (GK78A)	1993 - 1997	FL	
GSF	600	N, S Bandit (GN77B/H008)	1995 - 1999	FL	FR
RF	600	RP/RR/RS/RT/RV	1993 - 1997	FL	FR
AN	650	AK4/AK5/AK6/AK7/AK8/AZK8/AK9/AL0 Burgman / ABS	2004 - 2012	FL	FR
AN	650	K3/K4/K5/K6/K7/K8/K9/L0 Burgman (Non ABS)	2004 - 2011	FL	FR
AN	650	L3/L4/L5/L6 Burgman (Non ABS)	2013 - 2016	FL	FR
AN	650	ZL3/ZL4/ZL5/ZL6/ZL7/ZL8 Burgman ABS Executive	2013 - 2018	FL	FR
GSF	650	S/T/V/W/X Naked Bandit	1995 - 1999	FL	
GSX	650	ST/SV/SW/SX Faired Bandit	1995 - 1999	FL	
SWM					
	440	Gran Milano (4T)	2015 - 2015	FL	
	440	Gran Tourismo (4T)	2015 - 2015	FL	
	440	Silver Vase (4T)	2015 - 2015	FL	
TRIUMPH					
	800	Bonneville (790cc)	2001 - 2006	FL	FR
	800	Bonneville America (Spoke Wheel)	2002 - 2006	FL	FR
T100	800	Bonneville (790cc)	2002 - 2004	FL	FR
	865	Bonneville Spirit (Spoke Wheel)	2015 - 2015	FL	FR
	865	America (12 Spoke Cast wheels/865cc)	2010 - 2017	FL	FR
	865	America LT (12 spoke cast wheels/865cc)	2014 - 2017	FL	FR
	865	Bonneville Steve McQueen SE (Spoke Wheel)	2012 - 2012	FL	FR
	865	Bonneville/Bonneville Black	2007 - 2008	FL	FR
	865	Scrambler	2006 - 2015	FL	FR
	865	Speedmaster (EFI)	2008 - 2009	FL	FR
T100	865	Bonneville	2005 - 2009	FL	FR
T100	865	Bonneville (Air Cooled/Spoke Wheel)	2010 - 2016	FL	FR

PART NUMBER

022

AD	S3	S33 RACING	GP5	GP6	GP7	GPR

T100	865	Bonneville Black (Spoke Wheel/Air Cooled)	2014 - 2016	FL	FR
T214	865	Bonneville (Spoke Wheel)	2015 - 2015	FL	FR
	900	America (6 Spoke Cast wheel)	2007 - 2009	FL	FR
	900	Street Cup (Liquid Cooled)	2016 - 2020	FL	FR
	900	Street Scrambler (Liquid Cooled)	2016 - 2020	FL	FR
	900	Street Twin (Liquid Cooled)	2016 - 2020	FL	FR
	900	Thruxton	2004 - 2016	FL	FR
	900	Thruxton Ace	2015 - 2016	FL	FR
T100	900	Bonneville (Liquid Cooled/Spoke Wheel)	2016 - 2020	FL	FR
T100	900	Bonneville Black (Liquid Cooled/Spoke Wheel)	2016 - 2020	FL	FR
	1 200	Bonneville Bobber (Liquid Cooled)	2017 - 2020	FL	FR
	1 200	Thruxton (Liquid Cooled)	2016 - 2020	FL	FR
T120	1 200	Bonneville (Liquid Cooled)	2016 - 2020	FL	FR
T120	1 200	Bonneville Black (Liquid Cooled)	2016 - 2020	FL	FR

VOXAN

	1 000	Scrambler	2006 - 2006	FL	FR

YAMAHA

	125	Majesty S (XC 125 R)	2014 - 2015	FL
WR	125	R	2009 - 2015	FL
WR	125	X (Supermoto)	2009 - 2018	FL
XC	125	R	2014 - 2015	FL
WR	250	XX/XY (32D2-)	2008 - 2015	FL
WR	250	XX/XY (Supermoto) (32D2/4)	2008 - 2010	FL

ZONTES

R	310		2020 - 2020	FL
T	310		2020 - 2020	FL
V	310		2020 - 2020	FL
X	310		2020 - 2020	FL

EQUIVALENTS OEM

06455 MR1 405	06455 MR4 405	06455 MW3 405	06455 MV4 405	06455 MZ0 760	43082 0079	451A0 MT4 670
45105 ML7 921/922	45105 MS9 612	45105 MT4 651/405	45105 KAZ 004	45105 MV4 008	45105 ML7 405	45105 ML7 P10
45105 LBA2 305	45105 LEA7 305	45106 ML7 922	45106 ML7 922B	45106 MR4 901	45106 MS9 612	45106 MT4 651/405
59300 21820	59300 21840	59300 21850	8000 88482	06455 MBE 006	59100 21860	59100 21870
06455 KFR 701	T2020543	3D7 W0045 10	22B FS811 00	5AP W0045 00	59301 48811	43082 0150
43082 Y005	43082 Y007	45105 LCA7 305	45105 LLJ3 305	55120315	1DK W0045 00	59101 26820
T2027535	T2027545	43082 0173	43082 0165			

AD	K1	K5	K5-LX	S3	S33 RACING

PART NUMBER

023

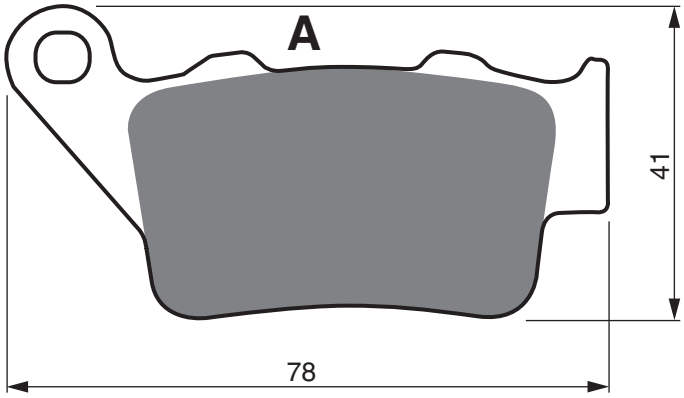

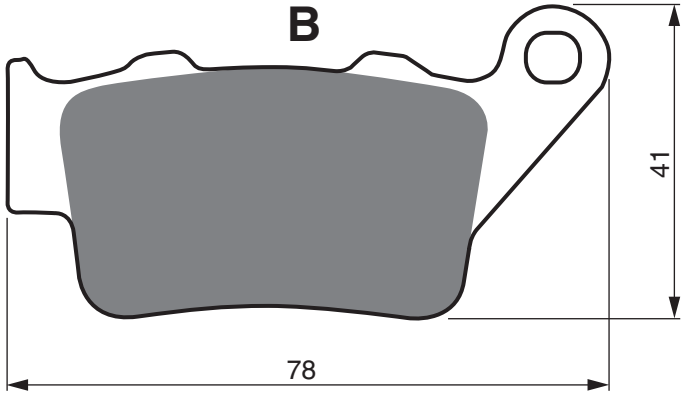

ALFER				
VRE	125	4T	1998 - 1998	RR
	250	Diferente Enduro	2001 - 2001	RR
	250	Diverdita Super Motard	2001 - 2001	RR
VR	250		1998 - 2013	RR
APRILIA				
	650	Pegaso	2007 - 2008	RR
	650	Pegaso Factory	2006 - 2008	RR
	650	Pegaso ie	2001 - 2004	RR
	650	Pegaso Strada	2005 - 2006	RR
	650	Pegaso Trial	2006 - 2008	RR
	750	Dorsoduro (ABS)	2008 - 2016	RR
	750	Dorsoduro Factory	2010 - 2013	RR
	750	Dorsoduro Factory (ABS)	2010 - 2012	RR
	750	Shiver (RAE00/STD & ABS)	2010 - 2016	RR
	750	Shiver GT (ABS)	2010 - 2012	RR
SL	750	Shiver (RA000)	2007 - 2010	RR
SL	750	Shiver GT	2009 - 2010	RR
	900	Dorsoduro (ABS)	2017 - 2020	RR
	900	Shiver (ABS)	2017 - 2020	RR
	1 200	Caponord (Cast Wheels)	2013 - 2016	RR
	1 200	Caponord Rally (Spoke Wheels)	2015 - 2020	RR
	1 200	Dorsoduro	2011 - 2012	RR
	1 200	Dorsoduro ATC/ABS	2011 - 2014	RR
BAJAJ				
	200	Pulsar Adventure AS	2015 - 2016	RR
	200	Pulsar NS	2014 - 2016	RR
	200	Pulsar RS (inc Lower Fairing)	2015 - 2016	RR
	220	Pulsar F	2015 - 2016	RR
	220	Pulsar S	2015 - 2016	RR
BENELLI				
	125	Aurak MY (BJ 125 10A)	2016 - 2017	RR
BX	450	Cross	2007 - 2012	RR
BX	505	Enduro	2008 - 2012	RR
BX	570	Motard	2008 - 2010	RR
BETA				
	125	Jonathan	2000 - 2001	RR
	350	Euro	2000 - 2001	RR
BMW				
HP4			2013 - 2014	RR
HP4		Carbon	2013 - 2014	RR
HP4		Race	2019 - 2020	RR
C1	125		1999 - 2003	RR
C1	200		2001 - 2003	RR
G	310	GS	2017 - 2020	RR
G	310	R	2017 - 2020	RR
C	400	GT	2018 - 2020	RR
C	400	X	2018 - 2020	RR
F	650	(E169/0161) Standard	1993 - 1996	RR
F	650	(E169/0162) (Funduro/High Screen / 19" Front Wheel)	1997 - 2000	RR
F	650	CS Scarver (K14/0174/0184 - Belt Drive / 17" Cast Wheels)	2000 - 2003	RR
F	650	CS Scarver (K14/0177/0187 - Belt Driver / 17" Cast Wheels)	2004 - 2007	RR
F	650	GS (30 Years GS) (Twin Cylinder 798cc/Cast wheel)	2011 - 2011	RR
F	650	GS (K72/0218/0228) (798cc Twin Cylinder/Cast Wheels)	2007 - 2012	RR

PART NUMBER

023

AD	K1	K5	K5-LX	S3	S33 RACING

F	650	GS (R13/0172/0182) (19" Front Wheel)	1999 - 2003	RR
F	650	GS (R13/0175/0185) Single Cylinder	2004 - 2007	RR
F	650	GS Dakar (R13/0173/0183) (21" Front Wheel)	1999 - 2003	RR
F	650	GS Dakar (R13/0176/0186) (21" Front Wheel)	2004 - 2007	RR
F	650	ST (E169/0163/168) Strada (18" Front Wheel / Low Screen)	1997 - 2000	RR
G	650	GS (R131) (Single Cylinder / Chain Drive)	2009 - 2015	RR
G	650	GS Sertao (Spoke Wheels)	2012 - 2014	RR
G	650	XChallenge	2007 - 2009	RR
G	650	XCountry	2007 - 2009	RR
G	650	XMoto (Cast Wheel)	2007 - 2009	RR
F	700	GS	2013 - 2018	RR
F	750	GS	2016 - 2020	RR
F	800	GS	2008 - 2018	RR
F	800	GS (30 Years GS)	2011 - 2011	RR
F	800	GS Adventure	2012 - 2018	RR
F	800	GS Triple Black	2012 - 2012	RR
F	800	GS Trophy	2012 - 2018	RR
F	800	GT	2013 - 2020	RR
F	800	R	2015 - 2020	RR
F	800	R Chris Pfeifer Edition	2009 - 2011	RR
F	800	R Sport	2015 - 2015	RR
F	800	S (Half Fairing)	2006 - 2017	RR
F	800	ST (Full Fairing)	2006 - 2012	RR
F	800	ST Touring	2010 - 2017	RR
F	850	GS	2016 - 2020	RR
F	850	GS Adventure	2016 - 2020	RR
F	900	R	2020 - 2020	RR
F	900	XR	2020 - 2020	RR
S	1 000	R	2018 - 2020	RR
S	1 000	R Naked (K47)	2014 - 2018	RR
S	1 000	R/RR (Models Fitted with Forged Race Wheels - 7 Spoke Type)	2010 - 2018	RR
S	1 000	RR	2018 - 2020	RR
S	1 000	RR (K46) (Disc Has fixed bobbins)	2010 - 2018	RR
S	1 000	RR M Sport	2018 - 2020	RR
S	1 000	RR Sport	2018 - 2020	RR

BORILE

B	500	CR	2002 - 2004	RR
B	500	MT	2002 - 2002	RR

CCM

604E		DS (Dual Sport/Trail) (260mm F/Disc)	1998 - 2003	RR
R45			2007 - 2009	RR
CR	40	Cafe Racer (Handlebar Fairing)	2007 - 2008	RR
CR	40	S Cafe Racer (Full Fairing)	2007 - 2009	RR
SR	40	Street Scrambler	2007 - 2009	RR
FT 35	400	S (DRZ 400 Motor)	2007 - 2009	RR
R35	400		2007 - 2009	RR
R35S	400		2007 - 2009	RR
	404	DS (260mm F/Disc)	2003 - 2004	RR
	404	DS Supermoto (320mm F/Disc)	2003 - 2004	RR
	404	E (260mm F/Disc)	2003 - 2004	RR
DS	404	Supermoto	2007 - 2009	RR
DS	404	Trail	2007 - 2009	RR
CMX	450	(MX)	2008 - 2008	RR
DS	450	Trail	2007 - 2009	RR
GP	450	(4T)	2013 - 2015	RR
	600	Spitfire	2019 - 2019	RR
	600	Spitfire Bobber	2019 - 2020	RR
	600	Spitfire Bobber Stealth Edition	2019 - 2020	RR
	600	Spitfire Foggy Edition	2019 - 2020	RR
	600	Spitfire Foggy Edition S	2019 - 2020	RR
	600	Spitfire Foggy Stealth Edition	2019 - 2020	RR
	600	Spitfire RAFBF 100	2019 - 2020	RR
	600	Spitfire Six	2019 - 2020	RR
	600	Spitfire Six Stealth Edition	2019 - 2020	RR
	600	Spitfire Stealth	2019 - 2020	RR
604E	600	Supermoto (320mm F/Disc)	1999 - 2003	RR
604RS	600	Roadster (320mm F/Disc)	2000 - 2003	RR
R30	604	(Mag Wheel) (604/644) (320mm F/Disc)	2002 - 2004	RR
R30	604	(Spoke Wheel) (604/644) (320mm F/Disc)	2002 - 2004	RR
DS	644	(320mm F/Disc)	2004 - 2004	RR
DS	644	Supermoto (320mm F/Disc)	2004 - 2004	RR
FT	650		2008 - 2008	RR
FT	710	S Flat Tracker	2008 - 2009	RR

DUCATI

	400	Scrambler Sixty 2	2016 - 2020	RR
	797	+ Monster	2018 - 2020	RR
	797	Monster	2017 - 2020	RR
	803	Scrambler Café Racer (Cast Wheels)	2017 - 2020	RR
	803	Scrambler Classic (Spoke Wheels)	2015 - 2020	RR
	803	Scrambler Desert Sled (Spoke Wheels)	2017 - 2020	RR
	803	Scrambler Flat Track Pro	2016 - 2016	RR
	803	Scrambler Full Throttle (Cast Wheels)	2015 - 2020	RR
	803	Scrambler Icon (Cast Wheels)	2015 - 2020	RR
	803	Scrambler Mach 2 (Cast wheels)	2018 - 2020	RR
	803	Scrambler Street Classic (Cast wheels)	2018 - 2020	RR
	803	Scrambler Urban Enduro (Spoke Wheels)	2015 - 2016	RR
	992	Classic Sport Biposto	2007 - 2007	RR
	1 000	Biposta	2007 - 2007	RR
	1 000	Paul Smart LE (992cc)	2006 - 2006	RR
	1 000	Sport (992cc)	2006 - 2007	RR
	1 000	Sport Classic (992cc) (Monoposto - Japan/Biposto - Europe)	2006 - 2008	RR
	1 000	Sport S	2007 - 2009	RR
	1 000	Sport S (992cc)	2007 - 2007	RR
GT	1 000	(992 ccm)	2007 - 2010	RR
GT	1 000	Touring (992cc)	2009 - 2009	RR
	1 100	Scrambler (1079cc)	2018 - 2020	RR
	1 100	Scrambler Special (1079cc)	2018 - 2020	RR
	1 100	Scrambler Sport (1079cc)	2018 - 2020	RR

FACTORY

YR	250	Desert	2003 - 2003	RR

GAS GAS

	125	/250 Enduros	2000 - 2000	RR
EC	125		1997 - 1999	RR
EC	200	Enduro	1997 - 1999	RR
EC	250		1997 - 1999	RR
EC	300		1996 - 1999	RR
	400	Enforcer four 2 Quad	1999 - 1999	FL
	501	Enforcer four 2 Quad	1999 - 1999	FL
	600	Enforcer four 2 Quad	1999 - 1999	FL

HIGHLAND

MX	450		2006 - 2006	RR
	950	V2 Motard	2000 - 2004	RR
	950	V2 Outback	2000 - 2004	RR

HONDA

CB	500	V/W/SW/X/SX/Y/SY/2/S2 (Twin)	1997 - 2003	RR
NX	500	V/W/X Dominator	1997 - 1999	RR
FX	650	X/Y Vigor	1999 - 2003	RR
NX	650	V/W/X Dominator	1997 - 1999	RR
SLR	650	V/W	1997 - 1998	RR

HP POWER

	600	Pantera	2011 - 2011	RR

HUSABERG

		All models	2000 - 2001	RR
FC	400		1999 - 2002	RR
FE	400	/530/650 Supermoto	1999 - 2003	RR
FE	400	S,E	1999 - 2003	RR
FE/FC	400	/450/501/550/650 Oversize with 270mm disc	1999 - 2013	RR
FS	400	E,C	2001 - 2002	RR
FC	450		2003 - 2013	RR

AD	K1	K5	K5-LX	S3	S33 RACING

PART NUMBER

023

FE	450	E	2006 - 2008	RR
FS	450	E	2006 - 2008	RR
FS	450	R	2006 - 2006	RR
FX	450	E	2003 - 2009	RR
GS	450	E	2006 - 2013	RR
FC	470		2001 - 2002	RR
FX	470	E	2001 - 2002	RR
FC	501		1991 - 1994	RR
FC	501		1999 - 2001	RR
FE	501	S,E	1999 - 2004	RR
FC	550		2001 - 2012	RR
FE	550	E	2006 - 2007	RR
	600	Enduro	1999 - 2001	RR
FE	600	S,E	1999 - 2002	RR
FS	650	C	2006 - 2008	RR
FS	650	E	2006 - 2008	RR
FS	650	E,C	2001 - 2005	RR
FX	650	E	2001 - 2012	RL
GS	650	E	2006 - 2013	RR

HUSQVARNA

2T		All models	2000 - 2001	RR
4T		All models	2000 - 2001	RR
	125	Enduro	2000 - 2013	RR
	125	Supermotard	1999 - 2013	RR
CR	125		1995 - 1999	RR
CR	125		2000 - 2004	RR
SM	125		1998 - 2000	RR
SM	125	S (4 bolt Fixing) (2T)	2002 - 2003	RR
SM	125	S (4 bolt fixing) (2T)	2004 - 2013	RR
SM	125	S (4T)	2011 - 2013	RR
SM	125	S Supermotard	1998 - 2010	RR
SMR	125	(4T)	2011 - 2013	RR
SMS	125	-4 (4T)	2011 - 2011	RR
TE	125	(4T)	2011 - 2013	RR
WR	125		1995 - 1999	RR
WR	125		2000 - 2005	RR
WRE	125		1993 - 2013	RR
WRE	125	Dual	2006 - 2007	RR
CR	250		1995 - 1999	RR
CR	250		1996 - 1999	RR
CR	250		2000 - 2005	RR
TC	250	(4T)	2002 - 2004	RR
TE	250	(4T)	2002 - 2005	RR
TXC	250	R (4T) (Kayaba Forks)	2013 - 2013	FL
WR	250		1992 - 2011	RR
WR	250	(2T)	2006 - 2011	RR
WR	250	(2T)	2009 - 2013	RR
WR	300		2006 - 2011	RR
TE	350		1995 - 1997	RR
WR	360		1995 - 1999	RR
WR	360		2000 - 2002	RL
SM	400	R	2002 - 2002	RR
TE	400		2001 - 2001	RR
TE	400		2002 - 2002	RR
	401	Svartpilen (4T)	2018 - 2020	RR
	401	Vitpilen (4T)	2018 - 2020	RR
TE	410		1995 - 2000	RR
TE	410	E	2000 - 2000	RR
SM	450	R	2003 - 2006	RR
SM	450	R	2005 - 2006	RR
TC	450		2003 - 2004	RR
TE	450		2002 - 2002	RR
TE	450		2003 - 2005	RR
SM	510	R	2005 - 2005	RR
SM	510	R	2005 - 2005	RR
TC	510		2004 - 2005	RR
TC	510	Centennial	2004 - 2013	RR
TE	510		2004 - 2005	RR
TE	510	Centennial	2004 - 2004	RR
	570	Nox	2001 - 2003	RR
SM	570	R	2001 - 2004	RR
TC	570		2002 - 2003	RR
TE	570		2001 - 2004	RR
LT	610	(6 Bolt Front Disc)	2000 - 2000	RR
SM	610		2005 - 2005	RR
SM	610	(6 bolt front disc)	1998 - 2000	RR
SM	610	ie	2007 - 2009	RR
SM	610	R	2000 - 2000	RR
SM	610	R/IE	2005 - 2007	RR
SM	610	S (4 bolt front disc)	2002 - 2006	RR
SM	610	S (Radial Caliper)	2006 - 2006	RR
TC	610		2000 - 2000	RR
TC	610	/TE E	1995 - 2004	RR
TC	610	E	1995 - 1999	RR
TE	610		2000 - 2000	RR
TE	610	E	1995 - 2003	RR
TE	610	E Supermotard	1999 - 2013	RR
TE	610	ie	2006 - 2009	RR
SMR	630		2004 - 2004	RR
SMR	630		2005 - 2005	RR
SMR	630		2006 - 2006	RR
TE	630		2010 - 2012	RR
STR	650	CRC	2007 - 2007	RR
TR	650	Strada (Cast wheel)	2012 - 2013	RR
TR	650	Terra (Spoke wheel)	2012 - 2013	RR
	701	Enduro	2016 - 2020	RR
	701	Enduro LR	2019 - 2020	RR
	701	Supermoto	2016 - 2020	RR
	701	Svartpilen	2018 - 2020	RR
	701	Vitpilen	2018 - 2020	RR
	900	Nuda	2012 - 2013	RR
	900	Nuda R	2012 - 2013	RR

HYOSUNG

RX	450	SM	2008 - 2008	RR

INDIAN

		Scout	2017 - 2020	RR
		Scout Bobber	2018 - 2020	RR
		Scout Bobber Twenty	2019 - 2020	RR
		Scout Sixty	2017 - 2020	RR

KRAM-IT

GS	250		1997 - 1997	RR
GS	250		2000 - 2000	RR
MX	250		1997 - 1997	RR
SM	250		2000 - 2000	RR
SMR	250		2000 - 2000	RR

KTM

	125	Duke (4T)	2011 - 2018	RR
	125	Sting	1997 - 1999	RR
EGS	125		1994 - 1994	RR
EXC	125		1994 - 1997	RR
EXC	125		1998 - 2003	RR
EXC	125		2009 - 2017	RR
EXE	125		2000 - 2000	RR
LC2	125		1996 - 1998	RR
RC	125		2014 - 2019	RR
SM	125	Supermoto	2000 - 2000	RR
SX	125		1994 - 1999	RR
SX	125	(Upside Down Forks)	2000 - 2003	RR
	200	Duke (4T)	2012 - 2015	RR
EGS	200		1998 - 2003	RR

PART NUMBER

023

AD | K1 | K5 | K5-LX | S3 | S33 RACING

EXC	200		1998 - 2003	RR
MXC	200		1998 - 2003	RR
RC	200		2014 - 2015	RR
	250	Duke	2015 - 2020	RR
EGS	250		1994 - 1994	RR
EXC	250		1994 - 2003	RR
EXC	250		1995 - 2003	RR
EXC	250	Enduro, enduro 4T	1999 - 2003	RR
MXC	250		1998 - 2003	RR
SX	250	(2T/Std forks)	1994 - 1999	RR
SX	250	(2T/Upside down forks)	2000 - 2002	RR
EXC	300		2000 - 2003	RR
GS	300		1995 - 1996	RR
EXC	350		1994 - 1995	RR
EXC	360		1996 - 1997	RR
MX	360		1996 - 1997	RR
SX	360		1996 - 1997	RR
EXC	380		1998 - 2003	RR
MXC	380		1998 - 2001	RR
SX	380		1998 - 2003	RR
	390	Adventure	2019 - 2020	RR
	390	Duke (300mm F/Disc)	2013 - 2017	RR
	390	Duke (320mm F/Disc)	2018 - 2020	RR
	390	Duke (4T)	2015 - 2015	RR
RC	390		2014 - 2016	RR
RC	390		2017 - 2020	RR
	400	Duke LC4	1994 - 1998	RR
EGS	400		1996 - 1999	RR
EGS	400	(USD)	2000 - 2003	RR
EGS-E	400		1996 - 1999	RR
EXC	400	(USD)	2000 - 2003	RR
EXC	400	Racing	2000 - 2003	RR
LC4-E	400	Enduro	2000 - 2001	RR
LSE	400		1996 - 1999	RR
SC	400		1996 - 1999	RR
SX	400		2000 - 2002	RR
SXC	400	Tiainen replica	1999 - 1999	RR
EXC	440		1994 - 1995	RR
SX	440		1994 - 1995	RR
	450	Rally	2017 - 2020	RR
EXC	450		2003 - 2003	RR
MX	500		1995 - 1995	RR
SX	500		1993 - 1995	RR
EXC	520		2001 - 2003	RR
MXC	520		2001 - 2002	RR
SX	520		2001 - 2003	RR
EXC	525		2002 - 2002	RR
EXC	525		2003 - 2003	RR
MXC	525		2004 - 2004	RR
MXC	525	Desert Racing	2003 - 2003	RR
SXC	540	Tiainen replica	1999 - 1999	RR
SXS	540		2001 - 2006	RR
MXC	550		1996 - 1996	RR
GS	600		1993 - 1994	RR
	620	Duke LC4	1994 - 1998	RR
EGS	620	Enduro	1996 - 1999	RR
EGS-E	620	Adventure-Rallye	1999 - 1999	RR
EGS-E	620	Enduro	1996 - 1999	RR
LC4	620	Adventure	1997 - 1998	RR
LC4	620	Competition	1996 - 1998	RR
LC4	620	RXC	1995 - 1995	RR
LC4	620	SC Supermoto	1999 - 2001	RR
LC4	620	SC Supermoto/Supercompetition	1999 - 1999	RR
LC4	620	Supercompetition	1995 - 2001	RR
LSE	620	Enduro	1996 - 1999	RR
SC	620	Supercompetition	1996 - 2000	RR
SX	620		1996 - 1998	RR
SX	620	EXC/EGS	1995 - 1995	RR
LC4	625	SC	2002 - 2006	RR
LC4	625	SC Supermoto	2002 - 2002	RR
SMC	625		2004 - 2006	RR
SXC	625		2003 - 2004	RR
	640	Duke II (2 pin pad fixing / Disc with Zero Offset)	1999 - 2002	RR
	640	Duke II (2 pin pad fixing/disc with offset)	2003 - 2007	RR
	640	Duke-E (Single pin pad fixing)	1998 - 1998	RR
LC4	640	Adventure	2001 - 2002	RR
LC4	640	Adventure	2003 - 2003	RR
LC4	640	Adventure	2005 - 2007	RR
LC4	640	Adventure R	1999 - 2002	RR
LC4	640	Adventure R	2004 - 2004	RR
LC4	640	SC	1999 - 2006	RR
LC4	640	SC Supermoto	2003 - 2006	RR
LC4	640	Supermoto	1999 - 2002	RR
LC4-E	640		2003 - 2006	RR
LC4-E	640	(2 pin fixing)	2004 - 2006	RR
LC4-E	640	(Central single pin fixing)	2003 - 2003	RR
LC4-E	640	Enduro	1999 - 2002	RR
LC4-E	640	Enduro	2000 - 2004	RR
LC4-E	640	Supermoto	2000 - 2006	RR
R	640	Adventure	1999 - 2002	RR
SMC	640	LC4	2005 - 2005	RR
LC4	660	Factory Replica	2005 - 2006	RR
LC4	660	Rallye	2001 - 2006	RR
SMC	660		2005 - 2006	RR
SMC	660	Supermoto	2003 - 2004	RR
	690	Duke (2-pin Pad Fixing) (Multi Spoke Cast Wheels)	2013 - 2020	RR
	690	Duke	2008 - 2011	RR
	690	Duke (2 pin pad fixing / 5 Spoke Cast Wheels)	2012 - 2012	RR
	690	Duke R (5 Spoke Cast Wheels)	2010 - 2011	RR
	690	Enduro	2008 - 2020	RR
	690	Enduro R	2009 - 2010	RR
	690	Enduro R	2011 - 2020	RR
	690	Enduro R (ABS)	2014 - 2020	RR
	690	R Duke (Multi Spoke Cast Wheels)	2013 - 2018	RR
	690	Rally Factory Replica	2007 - 2009	RR
LC4	690	Supermoto	2007 - 2007	RR
SM	690		2007 - 2009	RR
SM	690	LE (Limited Edition)	2010 - 2011	RR
SM	690	Prestige	2007 - 2007	RR
SMC	690		2008 - 2010	RR
SMC	690	R	2012 - 2013	RR
SMC	690	R (ABS)	2014 - 2020	RR
SMR	690	(4 Pad Type Caliper/Cast Wheel)	2007 - 2011	RR
	790	Adventure R	2018 - 2020	RR
	790	Duke	2018 - 2020	RR
	890	Duke R	2020 - 2020	RR
	950	Duke	2003 - 2003	RR
	990	Superduke	2005 - 2011	RR
	990	Superduke R	2007 - 2013	RR

MAICO

	250	Motocross/Enduro	1999 - 1999	RR
	500	Motocross/Enduro	1999 - 1999	RR
	500	Supermotard	1999 - 1999	RR

PRAGA

ED	250		1999 - 1999	RR
CD	610		1999 - 1999	RR

ROYAL ENFIELD

		Himalayan	2016 - 2020	RR
	500	Bullet (EFi/Single Seat)	2016 - 2018	RR

AD	K1	K5	K5-LX	S3	S33 RACING

PART NUMBER

023

	500	Classic (EFi/Single Seat)	2016 - 2020	RR
	500	Classic Chrome (EFi/Single Seat)	2016 - 2018	RR
	535	Continental GT (ABS)	2017 - 2020	RR
	535	Continental GT (Non ABS)	2013 - 2016	RR
	650	Continental Twin	2018 - 2018	RR
	650	Interceptor Twin	2018 - 2018	RR
SWM				
	440	Gran Milano Special (4T)	2015 - 2015	RR
	600	Super Dual T	2016 - 2020	RR
	600	Super Dual X	2016 - 2020	RR
RS	650	R	2016 - 2018	RR
SM	650	R	2016 - 2018	RR
TM				
	80	/85/100 Junior Cross (Small wheel)	2002 - 2004	RR
	80	/85/100 (Big wheel)	2002 - 2004	RR
	80	Cross	1996 - 2001	RR
	80	Enduro	1996 - 2000	RR
	85	Cross	1996 - 2001	RR
	125	Cross	1995 - 2000	RR
	125	Enduro	1995 - 2000	RR
MX	125		1996 - 2000	RR
	250	Cross	1995 - 2000	RR
	250	E	1995 - 2000	RR
	250	Enduro	1995 - 2000	RR
	300	Cross	1995 - 2000	RR
	300	Enduro (2T)	1995 - 2000	RR
	400	Cross (4T)	1995 - 2000	RR
	530	Cross (4T)	1998 - 2000	RR
TRIUMPH				
	660	Street Triple S (Nissin F/Brembo R Calipers)	2017 - 2020	RR
	675	Daytona (Nissin F/Brembo R Calipers)	2013 - 2017	RR
	675	Daytona R (Brembo Calipers F&R)	2013 - 2017	RR
	675	Street Triple (Nissin F/Brembo R Calipers)	2013 - 2016	RR
	675	Street Triple R (Nissn F/Brembo R Calipers)	2013 - 2016	RR
	675	Street Triple RX (Nissin F/Brembo R Calipers)	2015 - 2016	RR
	765	Daytona Moto 2	2020 - 2020	RR
	765	Street Triple R (Brembo 4 piston radial front calipers/Brembo single piston rear caliper)	2017 - 2020	RR
	765	Street Triple RS (Brembo 4 piston radial monobloc front calipers/Brembo single piston rear caliper)	2017 - 2020	RR
	765	Street Triple S ABS (Nissin 2 piston front calipers/Brembo single piston rear caliper)	2018 - 2020	RR
VERTEMATI				
		All models (2 piston Brembo)	1999 - 2004	RR
VOR				
		All models	1999 - 2004	RR
	400	Cross	2000 - 2001	RR
	400	Enduro	2000 - 2001	RR
EN	400		2002 - 2004	RR
MX	400		2002 - 2004	RR
SM	400		2002 - 2004	RR
EN	450		2002 - 2004	RR
MX	450		2002 - 2004	RR
SM-E	450	/530	2003 - 2004	RR
	500	492 Enduro	1999 - 2004	RR
	500	492 Supermotard	2000 - 2001	RR
	500	495 Cross	1999 - 2004	RR
MX	503	Enduro	2000 - 2001	RR
EN	530		2002 - 2004	RR
MX	530		2002 - 2004	RR
SM	530		2002 - 2004	RR
YAMAHA				
	125	Majesty S (XC 125 R)	2014 - 2015	RR
WR	125	R	2009 - 2015	RR
WR	125	X (Supermoto)	2009 - 2018	RR
X-MAX	125	Momo Design	2015 - 2015	RR
XC	125	R	2014 - 2015	RR
XC	155	F/G SMAX	2015 - 2016	RR
WR	250	RX/RY (32D1/3)	2008 - 2010	RR
WR	250	XX/XY (Supermoto) (32D2/4)	2008 - 2010	RR
X-Max	250	Momo Design	2015 - 2015	RR
XP	250	R X-Max (2PLI) Non ABS (Nissin Front/Brembo Rear)	2014 - 2015	RR
TT	600	E (4LW3/4LW4/4GV4/4GV5)	1994 - 2001	RR
TT	600	K From 4GV 003404 (Brembo Rear Caliper)	1995 - 1996	RR
TT	600	R (5CH1/5CH2/5CH3)	1997 - 2002	RR
TT	600	RE (5CH5)	2004 - 2004	RR
MT-03	660		2006 - 2012	RR
XT	660	R	2004 - 2016	RR
XT	660	X Supermoto	2004 - 2016	RR
XT	660	Z Tenere (ABS)	2008 - 2016	RR
XT	660	Z Tenere (Non ABS)	2008 - 2015	RR
XT	660	ZA Tenere (ABS)	2011 - 2016	RR
XT	700	Z Tenere	2018 - 2020	RR
ZERO				
DS		(ZF13.0) ((J.Juan F&R Calipers)	2016 - 2019	RR
DS		(ZF8.5/ZF11.4) (Nissin F/J.Juan R Calipers)	2014 - 2014	RR
DS		(ZF9.4/ZF12.5) (J.Juan F&R Calipers)	2015 - 2015	RR
DS II		(ZF14.4)	2019 - 2020	RR
DS II		(ZF7.2)	2019 - 2020	RR
DSR		(ZF13.0) (J.Juan F&R Calipers)	2017 - 2019	RR
DSR		(ZF14.4.0)	2019 - 2020	RR
DSR		Black Forest Edition (ZF14.4.0)	2019 - 2020	RR
FX		(ZF2.8/ZF5.7) (J.Juan F & R Calipers)	2015 - 2015	RR
FX		(ZF2.8/ZF5.7) (Nissin F/J.Juan R Calipers)	2014 - 2014	RR
FX		(ZF3.3/ZF6.5) (J.Juan F&R Calipers)	2016 - 2020	RR
FXS		(ZF3.3/ZF6.5) (J.Juan F&R Calipers)	2017 - 2020	RR
S		(ZF14.4)	2019 - 2020	RR
S		(ZF7.2)	2019 - 2020	RR
S		(ZF8.5/ZF11.4) (Nissin F/J. Juan R Calipers)	2014 - 2014	RR
S		(ZF9.4/ZF12.5) (J. Juan F & R Calipers)	2015 - 2015	RR
S		(ZF9.8/ZF13.0) (J.Juan F&R Calipers)	2016 - 2019	RR
SR		(ZF11.4) (Nissin F/J.Juan R Calipers)	2014 - 2014	RR
SR		(ZF12.5) (J. Juan F & R Calipers)	2015 - 2015	RR
SR		(ZF13.0) (J.Juan F&R Calipers)	2016 - 2020	RR
SR		(ZF9.4/ZF12.5) (J.Juan F&R Calipers)	2015 - 2015	RR

EQUIVALENTS OEM

800079072	8A0079072	8113538	AB040	AB040 S	546 13 309 200	546 13 309 300
546 13 309 400	211021038	4GV FS811 00	750 13 090 000	5VK W0046 00	8000A9231	06435 MAK 003
34 21 7 660 343	34 21 7 660 253	34 21 7 664 983	34 21 2 345 449	34 21 7 707 908	5VK W0046 00	8133825
61340761A	8133911	503 13 090 000	6130761A	858200	22BF591100	34 21 7 722 884
897119	7707809	901 13 090 000	T2024901	546 13 309 200	8539283	76513030000
613 13 090 000	750 13 090 000	2DLF581100	06435 KYJ 711	1DK WOO46 00	F000P02029	

PART NUMBER

024

AD | S3 | S33 RACING

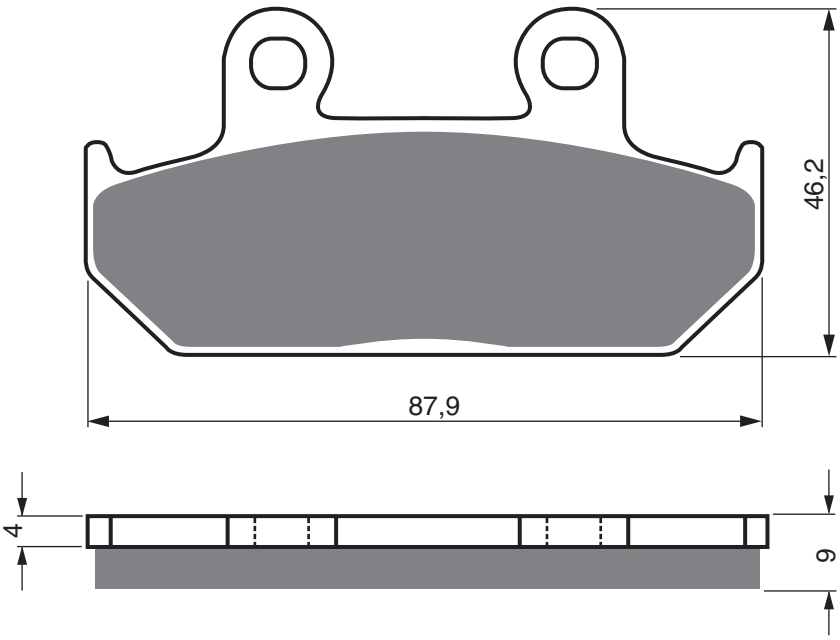

CAGIVA

	500	Canyon	1996 - 2000	FL	
	600	Canyon E	1996 - 1999	FL	
E	750	Elefant	1993 - 1995	FL	
E	900	Elefant Dakar Rep (300mm Front Disc)	1990 - 1990	FL	
E	900	Elefant ie GT (296 Front Disc)	1991 - 1992	FL	
E	900	ie Lucky Explorer (296mm Front Disc)	1990 - 1990	FL	

HONDA

CD	250	UJ	1988 - 1992	FL	
GB	250	J/L/P/S/V Clubman (MC 10-120-150)	1989 - 1997	FL	
VTZ	250	H/J/K	1986 - 1988	FL	
NV	400	CJ/CK Steed	1992 - 1993	FL	
NX	500	J/K/L/M	1988 - 1991	FL	
NX	500	N/P/R/S/T Dominator	1992 - 1996	FL	
VT	600	CN Shadow Custom	1993 - 1993	FL	
XL	600	VM/VN/VP Trans Alp	1991 - 1993	FL	
NX	650	J/K/L/LII/M Dominator	1988 - 1991	FL	
NX	650	N/P/R/S/T Dominator	1992 - 1996	FL	
XRV	650	J Africa Twin	1988 - 1989	FL	
GL	1 500	J/K/SEM/SEN/SEP/SER/SES/SEV/SEW/SEX/SEY Goldwing	1988 - 2000	FL	FR

EQUIVALENTS OEM

06455 MT8 405	06455 MS8 405	06455 MV4	06455 MS8 405	06455 MS6 P00	45105 KV0 701	45105 MN5 008
45105 MN5 018	45105 MN9 008	45105 MR1 671	45105 MS6 901	45105 MS8 008	45105 MT2 007	45105 MT2 008
45105 MT8 008	45106 MW3 671	451A0 MT8 670	451A0 MT2 670	8000 66796		

AD | K5 | S3 | S33 RACING | GP5 | GPR

PART NUMBER

025

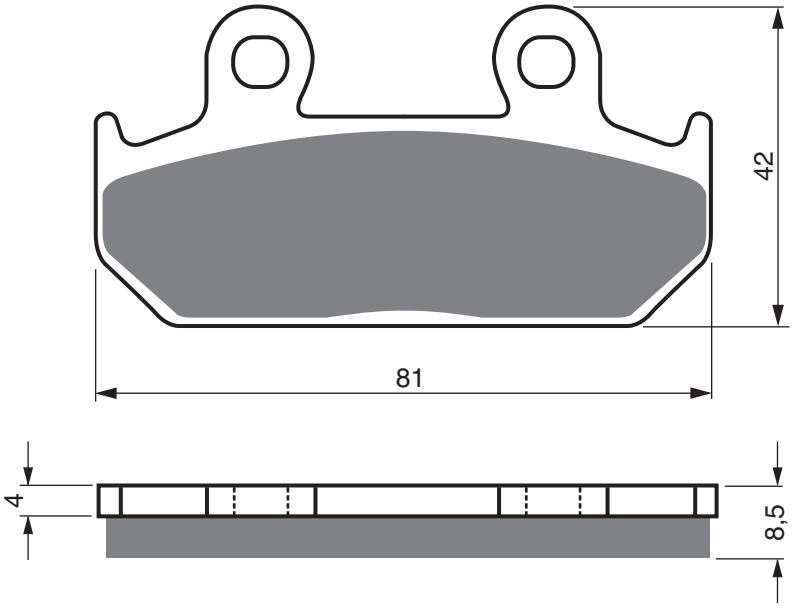

HONDA

CBR	250	FG/FGYA (MC14)	1986 - 1986	FL	FR
CBR	250	RH (MC17)	1987 - 1987	FL	FR
NSR	250	RG (MC16-100)	1986 - 1986	FL	FR
CB	350	SG/SJ	1986 - 1990	FL	FR
CBR	400	RG (NC23) 100	1986 - 1986	FL	FR
CBR	400	RH-YA (NC23) 101	1986 - 1986	FL	FR
VFR	400	RH2/RJ (NC24)	1987 - 1988	FL	FR
VFR	400	ZG/ZH/RG/RG-YA (NC21)	1985 - 1987	FL	FR
CB	450	SG/SJ	1986 - 1988	FL	FR
CBR	500	FH/FJ/FK/FL (Four)	1987 - 1990	FL	FR
CBR	600	FH/FJ/FK/FL	1987 - 1990	FL	FR
CBR	600	FM/FN/FP/FR	1991 - 1994	FL	FR
XRV	750	L/M/N Africa Twin	1990 - 1993	FL	FR

EQUIVALENTS OEM

06455 ML4 P00	06455 ML7 P10	451A0 MN4 670	45105 KT7 751	45105 KT7 761	45105 KT8 004	45105 ML4 000
45105 ML4 004	45105 ML4 006	45105 ML4 008	45105 ML4 014	45105 ML4 024	45105 ML7 017	45105 ML0 007
45105 MN4 007	45105 MN4 008	45105 MV1 008	45105 MV1 405			

PART NUMBER

026

AD	K1	K5	S3

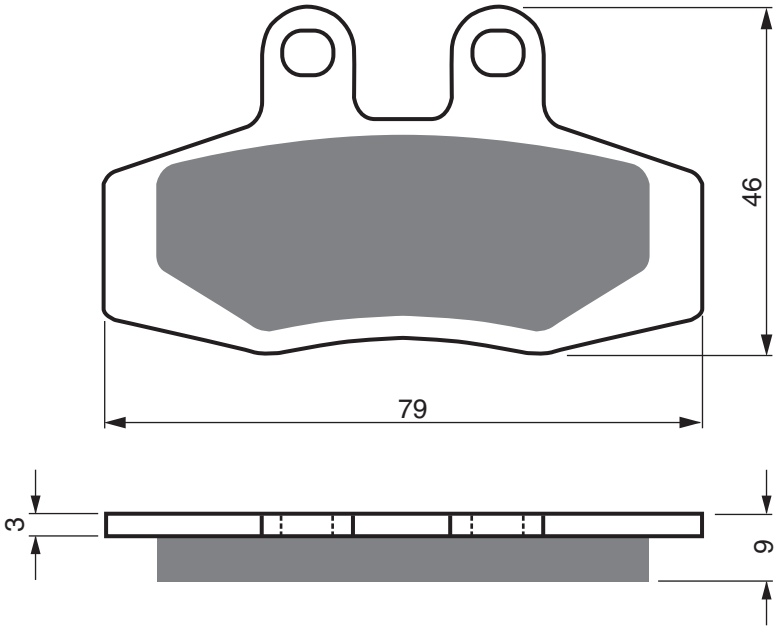

KTM

		Enduro Models	1989 - 1991	FL	RR
		GS, EXC, Enduro models	1991 - 1993	FL	
		Most 1988 Models	1988 - 1988	FL	RR
	125	/250/300/600 Enduro	1992 - 1993	FL	
	125	/250/400/600 LC Models	1989 - 1991	FL	RR
	125	/350 E/XL/GS	1990 - 1991	FL	
	125	/350 E/XL/GS	1990 - 1991	RR	
D-XC/E-XC/E-GS	125	Grimeca Calipers	1990 - 1991	FL	RR
D-XC/E-XC/E-GS	125	Grimeca Calipers	1992 - 1993	FL	
EXC	125		1989 - 1989	FL	RR
GS	125		1988 - 1988	FL	RR
MX	125		1989 - 1991	FL	RR
MX	125	Grimeca Calipers	1992 - 1993	FL	
	250	/300 E/XC/GS	1990 - 1991	FL	
D-XC/E-XC/T-XC/E-GS	250	Grimeca Calipers	1992 - 1993	FL	RR
DXC/EXC	250	5-0	1990 - 1990	FL	RR
EXC	250		1990 - 1994	FL	RR
EXC/EGS	250		1988 - 1989	FL	RR
GS	250		1988 - 1988	FL	RR
MX	250		1988 - 1991	FL	RR
GS	300		1990 - 1993	FL	RR
DXC/EXC/EGS	350		1990 - 1991	FL	RR
EXC	350		1988 - 1988	FL	RR
EXC	350		1989 - 1989	FL	RR
GS	350		1988 - 1991	FL	RR
MX	350		1988 - 1991	FL	RR
MX/EXC/EGS	350		1988 - 1988	FL	RR
LC-4 MX/EXC	500		1989 - 1991	FL	RR
MX	500		1988 - 1988	FL	RR
LC-4 EXC	600		1992 - 1993	FL	
LC-4 MX/EXC	600		1989 - 1991	FL	RR
LC4	600	Enduro	1990 - 1992	FL	
LC4	600	EXC	1992 - 1993	FL	
LC4	600	Six Days	1992 - 1992	FL	
MX	600		1990 - 1991	FL	RR

MAICO

		All Models	1989 - 1990	FL	RR
	250	MX	1994 - 1998	FL	RR
GP	250	all models	1989 - 1989	FL	RR
	350		1993 - 1993	FL	RR
GP	400	all models	1989 - 1989	FL	RR
	500		1993 - 1993	FL	RR
	500	MX	1994 - 1998	FL	
GP	500	all models	1989 - 1989	FL	RR

PHB

	500		1992 - 1992	FL	

EQUIVALENTS OEM

565 13209544	565 13209323

Disc Brake Pads

AD	S3	S33 RACING	GP5

PART NUMBER

027

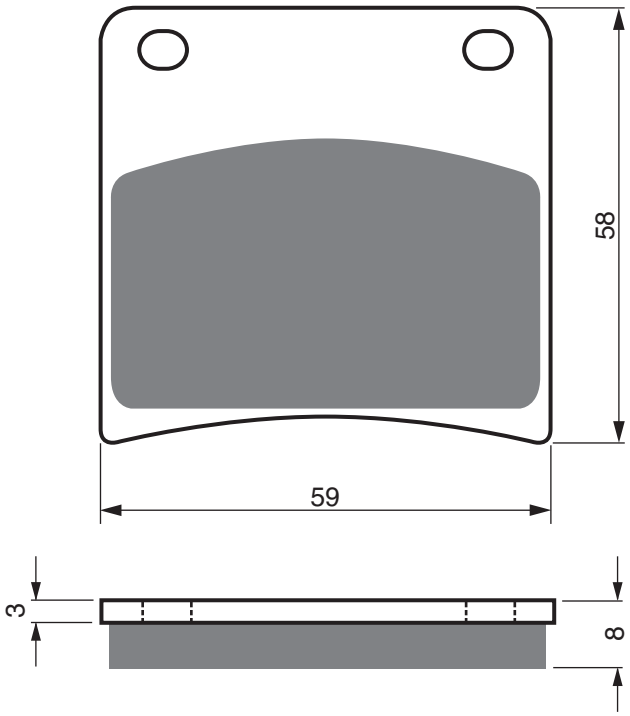

SUZUKI

GW	250	L3 Inazuma	2013 - 2013	FL	
GSX	400	F FJ/FK/FAK/FL (GK74A)	1988 - 1990	FL	FR
GSX	600	FJ/FK/FL/FM/FN/FP/FR/FS/FT/FV	1988 - 1997	FL	FR
GSX	750	FK/FL/FM/FN/FPFR/FS/FT/FV	1989 - 1997	FL	FR
VX	800	L/M/N/P/R/T	1990 - 1996	RR	
GSX	1 100	FJ/FK/FL/FM/FN/FP/FR (GV72A)	1988 - 1994	FL	FR
GSX	1 100	GM/GN/GP (GV74A/F725)	1991 - 1994	RR	
GV	1 400	GDG/GCG/GDH/GDJ "Cavalcade"	1986 - 1988	FL	FR

EQUIVALENTS OEM

59100 19820	59100 24810	59130 19C00	59130 20C00	59130 24A10	59130 26D00	59130 45C10
59130 48B00	69100 34860	69100 45890	69130 34C00	69130 45C00	69130 26D00	69100 26810
69130 45C10						

PART NUMBER

028

AD | S3 | S33 RACING

5 mm Pin Holes

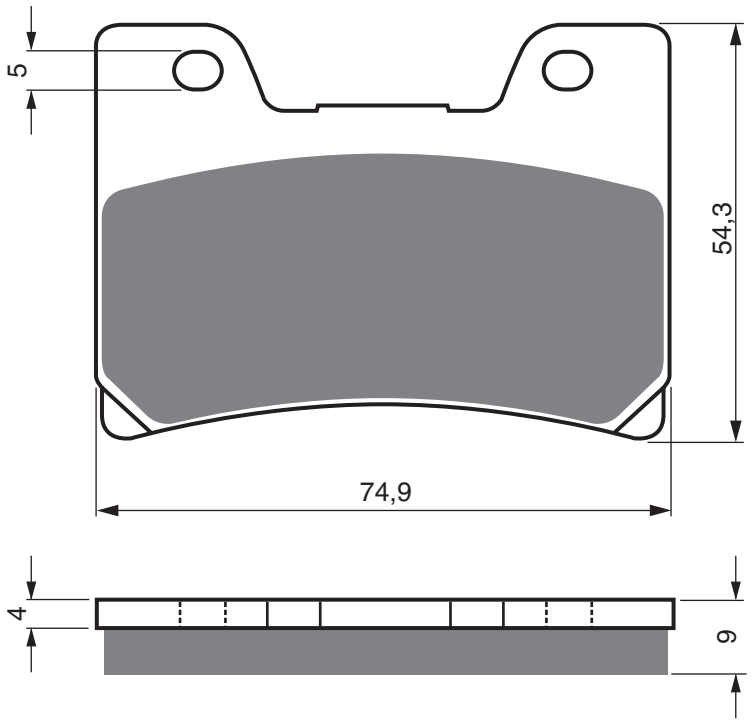

MZ					
	850	KBT	1995 - 1995	FL	
YAMAHA					
FZR	600		1990 - 1993	FL	FR
FZR	600	R	1994 - 1995	FL	FR
TDM	850		1996 - 2001	FL	FR
FZR	1 000	EX UP (Std Forks)	1989 - 1990	FL	FR
FJ	1 200	A (ABS Model)	1991 - 1995	FL	FR
V-MAX	1 200		1993 - 2003	FL	FR

EQUIVALENTS OEM

3GM W0045 00	3GM W0045 01	3GM W0045 11

AD | S3

PART NUMBER

029

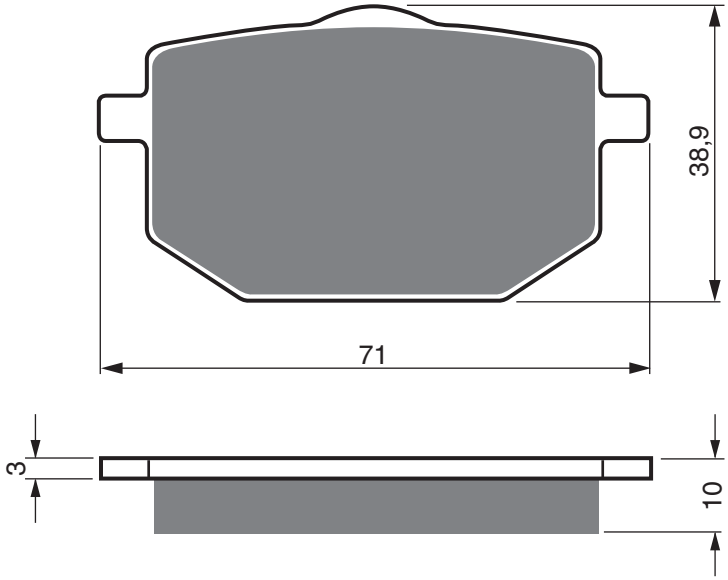

ALFER					
VRE	125	4T	1998 - 1998	FL	
	250	Diferente Enduro	2001 - 2001	FL	
	250	Diverdita Super Motard	2001 - 2001	FL	
MOTO-GUZZI					
NTX	750		1990 - 1990	FL	RR
YAMAHA					
RT	180	A, B, D	1990 - 1992	FL	
RT	180	E	1993 - 1993	FL	
XT	600		1987 - 1990	FL	
XT	600	Z "Tenere"	1985 - 1986	FL	
XT	600	Z "Tenere"	1988 - 1990	FL	

EQUIVALENTS OEM

55W W0045 00	55W W0045 01

PART NUMBER

030

AD | S3

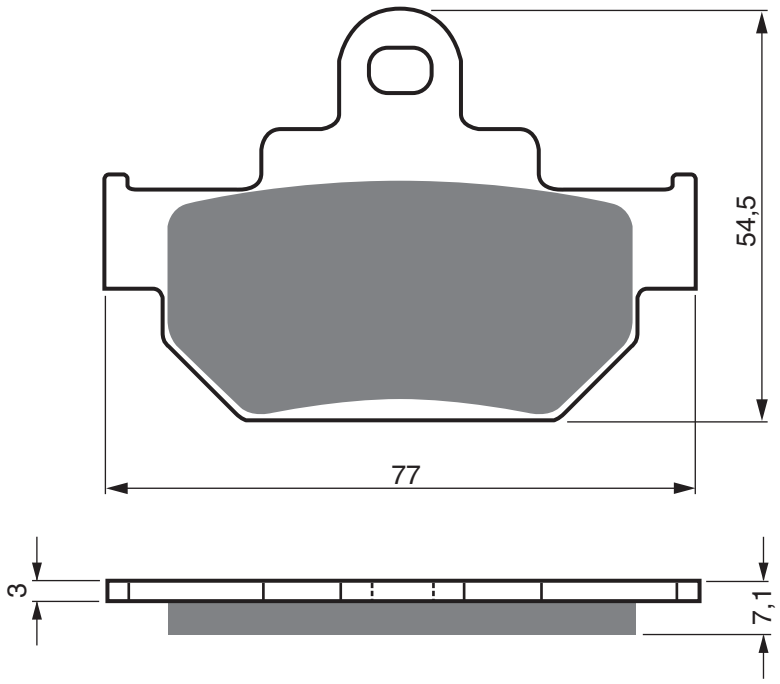

MAICO

GM	250	Star	1986 - 1986	FL	RR
GP	250	E	1987 - 1987	FL	RR
GP	250	Motocross	1987 - 1987	FL	RR
GP	400	E	1987 - 1987	FL	RR
GP	400	Motocross	1987 - 1987	FL	RR
GM	500	Star	1986 - 1986	FL	RR
GP	500	E	1987 - 1987	FL	RR
GP	500	Motocross	1987 - 1987	FL	RR
GP	550		1987 - 1987	FL	RR

SIAMOTO

	250	Geco	2004 - 2004	FL

SUZUKI

GZ	125	W/X/Y/K1-K9 "Marauder"	1998 - 2010	FL
RM	125	/ 250 F/G	1985 - 1986	FL
VL	125	Y/K1/K2/K3/K4/K5/K6/K7/K8 Intruder	2000 - 2008	FL
GZ	250	K2-K8 Marauder	2002 - 2008	FL
GZ	250	X/Y/K1	1999 - 2001	FL
TU	250	S/T/XS/XT/X-ST/XSV/XT-W (NJ47A 10001-115972)	1992 - 1997	FL
TU	250	XV/XW	1997 - 2000	FL
VL	250	K5/K6/K7 Intruder	2005 - 2007	FL
VL	250	Y/K1 Intruder	2000 - 2001	FL
LS	650	"Savage" FG/PK/PM/PR/PG/PT/PV/PW/PX	1987 - 1999	FL
LS	650	P Savage	1995 - 2004	FL

EQUIVALENTS OEM

59300 24830	59340 14600	59340 24B00	59340 24B10

AD	K1	K5	K5-LX	S3	S33 RACING

PART NUMBER

031

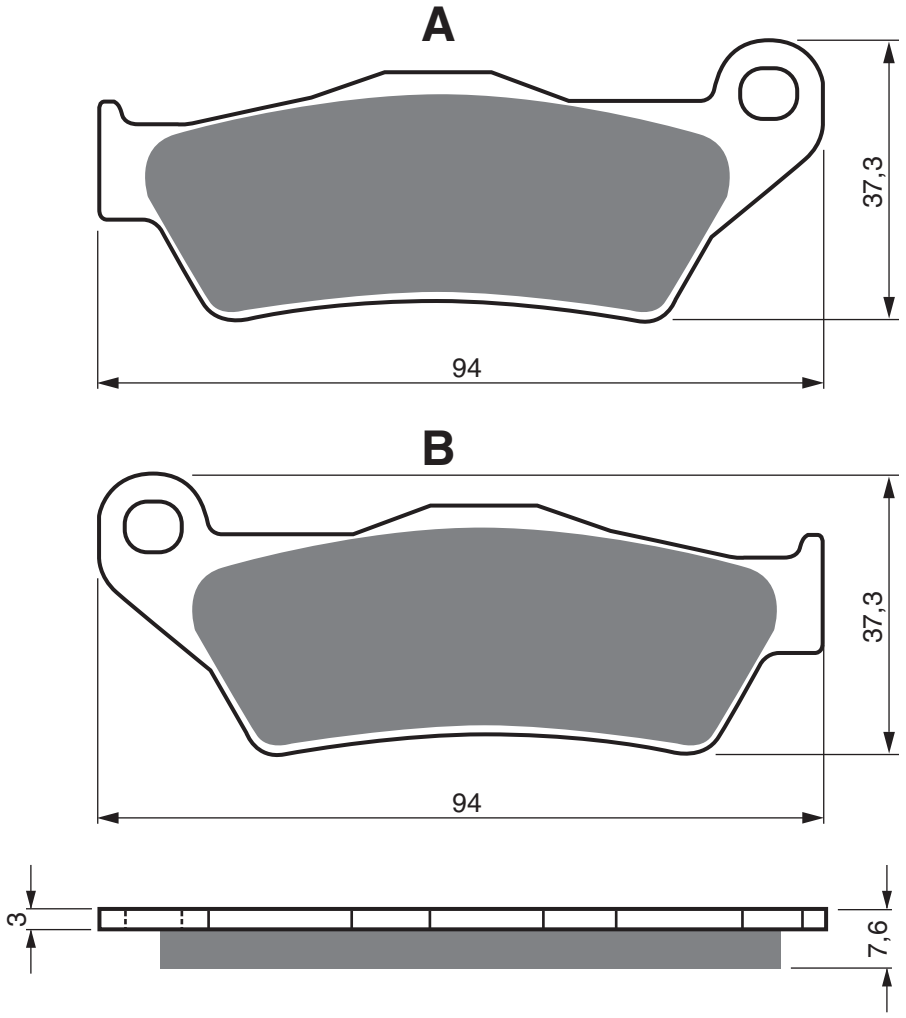

ALFER

VR	250		1998 - 2013	FL		

ALTA MOTORS (ELECTRIC)

		Redshift MX	2016 - 2018	FL		

APRILIA

MX	125		2004 - 2006	FL		
RX	125		2000 - 2001	FL		
RX	125		2008 - 2012	FL		
RX	125	(AJP Rear Caliper)	2008 - 2012	FL		
RX	125	(Brembo Front & Grimeca Rear Caliper)	2008 - 2012	FL		
SX	125	(Grimeca Caliper)	2008 - 2013	FL		
SRV	850		2012 - 2014	FL	FR	
RST	1 000	Futura	2001 - 2004	RR		

BAJAJ

	125	Discover S (Disc Brake)	2014 - 2016	FL		
	125	Discover ST	2013 - 2015	FL		
XDC	125	(Drum Brake)		FL		
	135	Pulsar LS	2012 - 2016	FL		
	150	Discover F (Disc Brake)	2014 - 2016	FL		
	150	Discover M	2014 - 2016	FL		
	150	Pulsar	2007 - 2016	FL		
	150	Pulsar Adventure AS	2015 - 2016	FL		
	150	Discover S (Disc Brake)	2014 - 2016	FL		
	180	Pulsar (UG4)	2012 - 2016	FL		
	200	Pulsar Adventure AS	2015 - 2016	FL		
	200	Pulsar NS	2014 - 2016	FL		
	200	Pulsar RS (inc Lower Fairing)	2015 - 2016	FL		
	220	Pulsar F	2015 - 2016	FL		
	220	Pulsar S	2015 - 2016	FL		

BENELLI

BX	250	Motard	2003 - 2003	FL		
BX	250	Motard	2012 - 2012	FL		
BX	250	Motard	2016 - 2018	FL		
BX	450	Cross	2007 - 2012	FL		
BX	505	Enduro	2008 - 2012	FL		

BMW

G	450	X	2008 - 2011	FL		
F	750	GS	2016 - 2020	FL		
F	750	GS	2016 - 2020	FR		
F	850	GS	2016 - 2020	FL		
F	850	GS Adventure	2016 - 2020	FL		

BREMBO RACING CALIPERS

		122A99021 P2 24 Off Road Caliper		FL		
		XQ 21361 02/28 Off Road Caliper		FL		

CAGIVA

E	750	Elefant	1993 - 1995	RR		
E	900	C Elefant (282mm Front Discs / USD Forks / Brembo Front/Rear Calipers)	1993 - 1997	FL	FR	RR
E	900	C ie Lucky Explorer	1995 - 1997	FL	FR	RR

PART NUMBER

031

AD	K1	K5	K5-LX	S3	S33 RACING

CCM							
604E		DS (Dual Sport/Trail) (260mm F/Disc)	1998 - 2003	FL			
R45			2007 - 2009	FL			
FT 35	400	S (DRZ 400 Motor)	2007 - 2009	FL			
R35	400		2007 - 2009	FL			
R35S	400		2007 - 2009	FL			
	404	DS (260mm F/Disc)	2003 - 2004	FL			
	404	DS Supermoto (320mm F/Disc)	2003 - 2004	FL			
	404	E (260mm F/Disc)	2003 - 2004	FL			
DS	404	Supermoto	2007 - 2009	FL			
DS	404	Trail	2007 - 2009	FL			
CMX	450	(MX)	2008 - 2008	FL			
DS	450	Trail	2007 - 2009	FL			
604E	600	Supermoto (320mm F/Disc)	1999 - 2003	FL			
604RS	600	Roadster (320mm F/Disc)	2000 - 2003	FL			
R30	604	(Mag Wheel) (604/644) (320mm F/Disc)	2002 - 2004	FL			
R30	604	(Spoke Wheel) (604/644) (320mm F/Disc)	2002 - 2004	FL			
DS	644	(320mm F/Disc)	2004 - 2004	FL			
DS	644	Supermoto (320mm F/Disc)	2004 - 2004	FL			
FT	650		2008 - 2008	FL			
FT	710	S Flat Tracker	2008 - 2009	FL			
DUCATI							
	400	Monster ie (Japan)	2007 - 2008	FL	FR		
	620	IE Monster (Second series)	2003 - 2005	FL	FR		
	620	Monster	2005 - 2006	FL	FR		
	620	Monster Dark	2005 - 2006	FL	FR		
	695	Monster	2007 - 2008	FL	FR		
S2R	803	Monster	2005 - 2006	FL	FR		
S2R	803	Monster Dark	2006 - 2006	FL	FR		
	950	Multistrada (936cc)	2017 - 2020	RR			
	1 200	Multistrada Enduro	2017 - 2018	RR			
	1 200	Multistrada Enduro Pro	2018 - 2019	RR			
	1 200	Multistrada Touring	2015 - 2017	RR			
	1 200	S Multistrada Touring	2015 - 2018	RR			
	1 260	Multistrada	2018 - 2020	RR			
	1 260	Multistrada Enduro	2018 - 2020	RR			
	1 260	Multistrada S Grand Tour	2019 - 2020	RR			
	1 260	Multistrada Touring	2018 - 2018	RR			
	1 260	S Multistrada	2018 - 2020	RR			
	1 260	S Multistrada D Air	2018 - 2020	RR			
	1 260	S Multistrada Pikes Peak	2018 - 2020	RR			
FACTORY							
YR	250	Desert	2003 - 2003	FL			
FANTIC							
	50	Caballero Regolarita Competizione	2006 - 2009	FL			
	50	Caballero Regolarita Competizione Mini	2008 - 2009	FL			
	50	Caballero Supersei Competizione	2007 - 2008	FL			
	125	Caballero Regolarita Competizione	2007 - 2009	FL			
GAS GAS							
HP	50	Quad Wild	2004 - 2007	FL	FR	RR	
EC	125		1997 - 1999	FL			
EC	200	Enduro	1997 - 1999	FL			
HP	240	Wild	2003 - 2006	FL	FR	RR	
EC	250		1997 - 1999	FL			
EC	300		1996 - 1999	FL			
HP	300	Quad RV	2003 - 2006	FL	FR	RR	
HP	300	Wild	2003 - 2006	FL	FR	RR	
	400	Pampera	2006 - 2006	FL			
HP	450	Quad	2004 - 2009	FL	FR	RR	
HP	515	Wild (Quad)	2009 - 2009	FL	FR	RR	
GILERA							
	500	Nexus	2003 - 2012	FL	FR		
GP	800	(Chain Drive)	2008 - 2014	FL	FR		
HARLEY DAVIDSON							
XG	500	Street (300mm Discs)	2016 - 2020	RR			
XG	750	Street (300mm Discs)	2016 - 2020	RR			
HIGHLAND							
	950	V2 Motard	2000 - 2004	FL			
	950	V2 Outback	2000 - 2004	FL			
HUSABERG							
		All models	1995 - 1998	FL			
		All models	2000 - 2001	FL			
		Enforcer Four	2000 - 2003	FL	FR	RR	
TE	125		2012 - 2014	FL			
FE	250	(4T)	2013 - 2014	FL			
TE	250	(2T)	2011 - 2014	FL			
TE	300	(2T)	2011 - 2014	FL			
FE	350	(4T)	2013 - 2014	FL			
FE	390	(New 70° Engine)	2010 - 2012	FL			
FC	400		1999 - 2002	FL			
FE	400	/530/650 Supermoto	1999 - 2003	FL			
FE	400	S,E	1999 - 2003	FL			
FE/FC	400	/450/501/550/650 Oversize with 270mm disc	1999 - 2013	FL			
FC	450		2003 - 2013	FL			
FE	450	(New 70° Engine)	2008 - 2014	FL			
FE	450	E	2006 - 2008	FL			
FX	450		2010 - 2012	FL			
FX	450	E	2003 - 2009	FL			
FC	470		2001 - 2002	FL			
FX	470	E	2001 - 2002	FL			
FC	501		1991 - 1994	FL			
FC	501		1999 - 2001	FL			
FE	501	(4T)	2013 - 2014	FL			
FE	501	S,E	1999 - 2004	FL			
FC	550		2001 - 2012	FL			
FE	550	E	2006 - 2007	FL			
FE	550	E	2008 - 2008	FL			
FE	570		2009 - 2012	FL			
FE	570	(New 70° Engine)	2009 - 2012	FL			
	600	Enduro	1999 - 2001	FL			
FE	600	S,E	1999 - 2002	FL			
FE	650	E	2006 - 2008	FL			
FX	650	E	2001 - 2012	FL			
HUSQVARNA							
2T		All models	2000 - 2001	FL			
4T		All models	2000 - 2001	FL			
TC	85		2021 - 2021	FL			
	125	Enduro	2000 - 2013	FL			
	125	Supermotard	1999 - 2013	FL			
CR	125		1995 - 1999	FL			
CR	125		2000 - 2004	FL			
CR	125		2005 - 2013	FL			
SM	125		1998 - 2000	FL			
SM	125	S	2002 - 2013	FL			
SM	125	S (4 bolt Fixing) (2T)	2002 - 2003	FL			
SM	125	S (4 bolt fixing) (2T)	2004 - 2013	FL			
SM	125	S (4T)	2011 - 2013	FL			
SMR	125	(4T)	2011 - 2013	FL			
SMS	125	-4 (4T)	2011 - 2011	FL			
TC	125	(2T)	2014 - 2020	FL			
TE	125	(2T)	2014 - 2019	FL			
TE	125	(4T)	2011 - 2013	FL			
TX	125	(2T)	2018 - 2019	FL			
WR	125		1995 - 1999	FL			
WR	125		2000 - 2005	FL			
WR	125		2006 - 2013	FL			
WRE	125		1993 - 2013	FL			
TE	150	i (2T)	2018 - 2020	FL			
CR	250		1995 - 1999	FL			

AD | K1 | K5 | K5-LX | S3 | S33 RACING

PART NUMBER

031

CR	250		1996 - 1999	FL
CR	250		2000 - 2005	FL
CR	250		2005 - 2013	FL
FC	250	(4T)	2014 - 2020	FL
FE	250	(4T)	2014 - 2020	FL
TC	250	(2T)	2014 - 2020	FL
TC	250	(4T)	2002 - 2004	FL
TC	250	(4T)	2003 - 2004	FL
TC	250	(4T)	2005 - 2012	FL
TC	250	(4T)	2013 - 2013	FL
TC	250	R (4T) (Kayaba Forks)	2013 - 2013	FL
TE	250	(2T)	2014 - 2020	FL
TE	250	(2T) inc Tpi	2014 - 2020	FL
TE	250	(4T)	2002 - 2005	FL
TE	250	(4T)	2006 - 2013	FL
TE	250	Meo Replica (4T)	2011 - 2011	FL
TXC	250	Cross Country	2008 - 2012	FL
WR	250		1992 - 2011	FL
WR	250	(2T)	1995 - 1999	FL
WR	250	(2T)	2000 - 2005	FL
WR	250	(2T)	2006 - 2011	FL
WR	250	(2T)	2009 - 2013	FL
TE	300	(2T)	2014 - 2020	FL
TE	300	Tpi (2T) inc Jarvis Edition	2019 - 2020	FL
TX	300	(2T)	2018 - 2019	FL
WR	300	(2T)	2009 - 2012	FL
TE	310	(4T)	2009 - 2013	FL
TE	310	(4T)	2009 - 2013	FL
TE	310	R (4T) (Kayaba Forks)	2013 - 2013	FL
TXC	310	Cross Country	2012 - 2012	FL
TXC	310	R (4T) (Kayaba Forks)	2013 - 2013	FL
FC	350	(4T)	2014 - 2020	FL
FE	350	(4T)	2014 - 2020	FL
FX	350	(4T)	2018 - 2020	FL
TE	350		1995 - 1997	FL
WR	360		1995 - 1999	FL
WR	360		2000 - 2002	FL
TE	400		2001 - 2001	FL
TE	400		2002 - 2002	FL
TE	410		1995 - 2000	FL
TE	410		2006 - 2006	FL
TE	410	E	2000 - 2000	FL
TC	449	(4T)	2011 - 2013	FL
TE	449	(4T)	2011 - 2013	FL
FC	450	(4T) inc Rockstar Edition	2014 - 2020	FL
FE	450	(4T)	2014 - 2020	FL
FX	450	(4T)	2017 - 2019	FL
TC	450		2003 - 2004	FL
TC	450		2005 - 2010	FL
TE	450		2002 - 2002	FL
TE	450		2003 - 2005	FL
TE	450		2006 - 2010	FL
FE	501	(4T)	2014 - 2020	FL
TC	510		2004 - 2005	FL
TC	510		2005 - 2009	FL
TC	510	Centennial	2004 - 2013	FL
TE	510		2004 - 2005	FL
TE	510		2006 - 2010	FL
TE	510	Centennial	2004 - 2004	FL
TE	511	(4T)	2011 - 2013	FL
TC	570		2002 - 2003	FL
TE	570		2001 - 2004	FL
TE	570		2009 - 2013	FL
TC	610		2000 - 2000	FL
TC	610	/TE E	1995 - 2004	FL
TC	610	E	1995 - 1999	FL
TE	610		1996 - 2004	FL
TE	610		2000 - 2000	FL
TE	610	E	1995 - 2003	FL
TE	610	E	1995 - 2000	FL
TE	610	E	2002 - 2003	FL
TE	610	ie	2006 - 2009	FL
TE	630		2010 - 2012	FL
JAWA				
	650	Classic 836	2007 - 2007	FL
KEEWAY				
	125	Silverblade	2007 - 2007	FL
	150	Silverblade	2007 - 2007	FL
KXM	200		2014 - 2014	FL
KXV	200		2014 - 2014	FL
	250	Silverblade	2007 - 2007	FL
KRAM-IT				
GS	250		1997 - 1997	FL
GS	250		2000 - 2000	FL
MX	250		1997 - 1997	FL
SM	250		2000 - 2000	FL
KTM				
SX	85		2021 - 2021	FL
D-XC/E-XC/E-GS	125	Brembo Calipers	1992 - 1993	FL
EGS	125		1994 - 1994	FL
EXC	125		1994 - 1997	FL
EXC	125		1998 - 2003	FL
EXC	125		2004 - 2008	FL
EXC	125		2009 - 2017	FL
EXC	125	(2T) Six Days	2011 - 2017	FL
EXE	125		2000 - 2000	FL
GS	125		1992 - 1992	FL
LC2	125		1996 - 1998	FL
MX	125		1990 - 1993	FL
MX	125	Brembo Calipers	1992 - 1993	FL
SM	125	Supermoto	2000 - 2000	FL
SX	125		1994 - 1999	FL
SX	125	(Upside Down Forks)	2000 - 2003	FL
SX	125	(Upside Down Forks)	2004 - 2008	FL
SX	125	(Upside Down Forks)	2009 - 2020	FL
XC-W	125	(2T)	2017 - 2020	FL
SX	150		2008 - 2008	FL
SX	150	(Upside down Forks)	2009 - 2020	FL
XC	150	(USD)	2011 - 2013	FL
XC-W	150	(2T) inc Tpi	2017 - 2020	FL
EGS	200		1994 - 1997	FL
EGS	200		1998 - 2003	FL
EXC	200		1994 - 1997	FL
EXC	200		1998 - 2003	FL
EXC	200	(inc Six Days)	2004 - 2016	FL
MXC	200		1998 - 2003	FL
XC-W	200		2006 - 2009	FL
XC-W	200		2012 - 2012	FL
EGS	250		1994 - 1994	FL
EXC	250		1994 - 2003	FL
EXC	250		1995 - 2003	FL
EXC	250		2004 - 2020	FL
EXC	250	(2T) Six Days	2011 - 2020	FL
EXC	250	4T	2004 - 2005	FL
EXC	250	Enduro, enduro 4T	1999 - 2003	FL
EXC	250	Racing	2006 - 2006	FL
EXC-F	250		2006 - 2020	FL
EXC-F	250	(4T) Six Days	2011 - 2020	FL
MX	250		1992 - 1993	FL

PART NUMBER

031

AD | K1 | K5 | K5-LX | S3 | S33 RACING

MXC	250		1998 - 2003	FL
SX	250	(2T) (Upside Down Forks)	2009 - 2020	FL
SX	250	(2T/Std forks)	1994 - 1999	FL
SX	250	(2T/Upside down forks)	2000 - 2002	FL
SX	250	(2T/Upside down forks)	2003 - 2008	FL
SX-F	250	(4T)	2006 - 2020	FL
SX-F	250	Ken Roczen Edition	2012 - 2012	FL
SX-F	250	Prado	2020 - 2020	FL
XC	250	(2T) Tpi	2019 - 2020	FL
XC	250	(USD)	2011 - 2017	FL
XC-F	250	(USD)	2011 - 2017	FL
EXC	300		2000 - 2003	FL
EXC	300		2004 - 2020	FL
EXC	300	(2T) Inc Tpi Six Days & Erzbergrodeo	2011 - 2020	FL
EXC	300	(2T) Six Days	2011 - 2020	FL
EXC	300	(Upside Down Forks)	2000 - 2020	FL
EXC	300	E (Electric Start)	2008 - 2019	FL
GS	300		1995 - 1996	FL
GS	300	Enduro	1993 - 1994	FL
MX	300		1992 - 1992	FL
XC	300	(2T)	2011 - 2020	FL
EXC	350		1994 - 1995	FL
EXC	350	LC4	1994 - 1995	FL
EXC-F	350	(USD)	2011 - 2020	FL
EXC-F	350	Six Days	2012 - 2020	FL
GS	350		1993 - 1993	FL
SX-F	350	(Upside down Forks)	2011 - 2020	FL
SX-F	350	Six Days Diaphragm Spring	2012 - 2012	FL
SX-F	350	Tony Cairoli Edition	2012 - 2012	FL
XC-F	350		2012 - 2020	FL
EXC	360		1996 - 1997	FL
MX	360		1996 - 1997	FL
SX	360		1996 - 1997	FL
EXC	380		1998 - 2003	FL
MXC	380		1998 - 2001	FL
SX	380		1998 - 2003	FL
EGS	400		1996 - 1999	FL
EGS	400	(USD)	2000 - 2003	FL
EGS-E	400		1996 - 1999	FL
EXC	400		2004 - 2011	FL
EXC	400	(4T)	2009 - 2011	FL
EXC	400	(USD)	2000 - 2003	FL
EXC	400	Racing	2000 - 2003	FL
EXC	400	Racing	2004 - 2007	FL
LC4	400		1993 - 1999	FL
LC4	400	/620 Supermoto with 320 mm disc	1994 - 1998	FL
LC4-E	400	Enduro	2000 - 2001	FL
LSE	400		1996 - 1999	FL
SC	400		1996 - 1999	FL
SX	400		2000 - 2002	FL
SXC	400	Tiainen replica	1999 - 1999	FL
XC-W	400		2007 - 2009	FL
EXC	440		1994 - 1995	FL
SX	440		1994 - 1995	FL
EXC	450		2003 - 2003	FL
EXC	450	(4T)	2004 - 2008	FL
EXC	450	(4T)	2009 - 2011	FL
EXC	450	(4T)	2012 - 2020	FL
EXC	450	(4T) Six Days	2011 - 2020	FL
EXC	450	Racing	2006 - 2007	FL
EXC-R	450	(4T)	2008 - 2008	FL
SX	450		2003 - 2007	FL
SX	450	F	2008 - 2015	FL
SX-F	450	(4T)	2007 - 2020	FL
SXS	450		2004 - 2010	FL
XC-F	450		2008 - 2012	FL
XC-F	450		2013 - 2019	FL
XC-W	450		2007 - 2009	FL
EXC	500	(4T)	2012 - 2020	FL
EXC	500	(4T) Six Days	2012 - 2020	FL
MX	500		1992 - 1994	FL
MX	500		1995 - 1995	FL
SX	500		1993 - 1995	FL
SX-F	505		2007 - 2008	FL
SX-F	505		2009 - 2009	FL
EXC	520		2001 - 2003	FL
MXC	520		2001 - 2002	FL
SX	520		2001 - 2003	FL
EXC	525		2002 - 2002	FL
EXC	525		2003 - 2003	FL
EXC	525		2004 - 2005	FL
EXC	525	Racing	2004 - 2006	FL
MXC	525		2004 - 2004	FL
MXC	525	Desert Racing	2003 - 2003	FL
SX	525		2003 - 2006	FL
SX	525	Racing	2004 - 2006	FL
XC	525	Racing	2006 - 2007	FL
EXC	530		2009 - 2010	FL
EXC	530	(4T) Six Days	2011 - 2011	FL
EXC-R	530	(4T)	2008 - 2008	FL
SXC	540	Tiainen replica	1999 - 1999	FL
SXS	540		2001 - 2006	FL
MXC	550		1996 - 1996	FL
GS	600		1993 - 1994	FL
EGS	620	Enduro	1996 - 1999	FL
EGS-E	620	Adventure-Rallye	1999 - 1999	FL
EGS-E	620	Enduro	1996 - 1999	FL
LC4	620	Adventure	1997 - 1998	FL
LC4	620	Competition	1996 - 1998	FL
LC4	620	RXC	1995 - 1995	FL
LC4	620	SC Supermoto	1999 - 2001	FL
LC4	620	SC Supermoto	2000 - 2000	FL
LC4	620	SC Supermoto/Supercompetition	1999 - 1999	FL
LC4	620	Supercompetition	1995 - 2001	FL
LSE	620	Enduro	1996 - 1999	FL
SC	620	Supercompetition	1996 - 2000	FL
SX	620		1996 - 1998	FL
SX	620	/EXC/EGS	1994 - 1994	FL
SX	620	EXC/EGS	1995 - 1995	FL
LC4	625	SC	2002 - 2006	FL
LC4	625	SC Supercompetititon	2002 - 2002	FL
LC4	625	SC Supermoto	2002 - 2002	FL
SXC	625		2003 - 2004	FL
SXC	625		2005 - 2006	FL
LC4	640	Adventure	2001 - 2002	FL
LC4	640	Adventure	2003 - 2003	FL
LC4	640	Adventure	2003 - 2003	FR
LC4	640	Adventure R	1999 - 2002	FL
LC4	640	SC	1999 - 2006	FL
LC4-E	640	Enduro	1999 - 2002	FL
LC4-E	640	Enduro	2000 - 2004	FL
LC4-E	640	Supermoto	2000 - 2006	FL
R	640	Adventure	1999 - 2002	FL
LC4	660	Rallye	2001 - 2006	FL
	950	Adventure	2002 - 2006	RR
	950	Adventure S	2003 - 2006	RR
	950	R Superenduro	2006 - 2008	RR
	950	Supermoto	2005 - 2007	RR
SM	950	R	2007 - 2007	RR
	990	Adventure R (Non ABS)	2009 - 2012	RR

AD	K1	K5	K5-LX	S3	S33 RACING

PART NUMBER

031

	990	Adventure S (Non ABS)	2006 - 2008	RR	
LC8	990	Adventure (Non ABS)	2009 - 2012	RR	
LC8	990	Adventure Dakar Edition (ABS)	2011 - 2011	RR	
SM-R	990	Supermoto R	2008 - 2009	RR	
SM-R	990	Supermoto R	2010 - 2013	RR	
SM-T	990	Supermoto T	2009 - 2013	RR	
	1 050	Adventure	2015 - 2016	RR	
	1 090	Adventure	2017 - 2019	RR	
	1 090	Adventure R	2017 - 2020	RR	
	1 190	Adventure	2013 - 2016	RR	
	1 190	Adventure R	2013 - 2016	RR	
	1 290	Super Adventure	2015 - 2016	RR	
	1 290	Super Adventure R ABS	2017 - 2020	RR	
	1 290	Super Adventure S ABS	2017 - 2020	RR	
	1 290	Super Adventure T ABS	2017 - 2017	RR	

MAICO

	250	Motocross/Enduro	1999 - 1999	FL	
	500	Motocross/Enduro	1999 - 1999	FL	
	500	Supermotard	1999 - 1999	FL	

MBK

XP	125	Skycruiser	2006 - 2006	FL	
XQ	125	Thunder	2001 - 2003	FL	
YP	125	D Skyliner	1998 - 2010	FL	
	150	Skyliner	2001 - 2001	FL	
XQ	150	Thunder	2001 - 2003	FL	
	180	Skyliner	2004 - 2004	FL	
YP	300	R Kilibre	2003 - 2004	FL	RR

MOTO-GUZZI

	850	Breva ie (Non ABS models)	2006 - 2007	RR	
	850	Griso	2006 - 2007	RR	
	940	Bellagio	2007 - 2013	RR	
	1 100	Breva (ABS)	2005 - 2007	RR	
	1 100	Breva (Non ABS models)	2005 - 2007	RR	
	1 100	Breva V	2005 - 2005	RR	
	1 100	Griso 4V (1064cc)	2005 - 2008	RR	
	1 100	Quota ES	1999 - 2001	RR	
	1 200	Breva	2008 - 2009	RR	
	1 200	Griso 8v (1151cc/Cast Wheel/Rad.cal.)	2009 - 2011	RR	
	1 200	Griso 8v (Std - Cast Wheel/Radial Caliper)	2007 - 2012	RR	
	1 200	Norge	2006 - 2007	RR	
	1 200	Sport (2V)	2007 - 2009	RR	
	1 200	Sport (4V)	2006 - 2007	RR	
	1 200	Sport (8V)	2008 - 2013	RR	
	1 200	Stelvio	2008 - 2011	RR	
	1 200	Stelvio 8V (ABS)	2011 - 2015	RR	
	1 200	Stelvio 8v NTX (ABS)	2011 - 2015	RR	
	1 200	Stelvio NTX ABS	2009 - 2010	RR	
GT	1 200	Norge 8V (ABS)	2008 - 2015	RR	

MOTO-MORINI

	1 200	Granferro	2010 - 2013	RR	
	1 200	Granpasso	2008 - 2013	RR	
	1 200	Scrambler	2010 - 2013	RR	

OSSA

	250	Enduro i	2012 - 2012	FL	
	300	Enduro i	2012 - 2012	FL	

PEUGEOT

	250	i Enduro	2012 - 2012	FL	
	300	i Enduro	2012 - 2012	FL	

PIAGGIO VESPA

X9	250	(Linked brake F&R wheel 14")	2004 - 2004	FL	
	400	Beverley ie	2007 - 2007	FL	
X9	500	cc Evolution (Inc. ABS)	2003 - 2006	FL	FR
X9	500	ie	2007 - 2007	FL	FR

PRAGA

ED	250		1999 - 1999	FL	
CD	610		1999 - 1999	FL	

RIEJU

	250	Marathon	2009 - 2010	FL	
	450	Marathon	2009 - 2010	FL	
MRX	450		2008 - 2010	FL	

ROYAL ENFIELD

		Himalayan	2016 - 2020	FL	
	500	Bullet (EFi/Single Seat)	2016 - 2018	FL	
	500	Classic (EFi/Single Seat)	2016 - 2020	FL	
	500	Classic Chrome (EFi/Single Seat)	2016 - 2018	FL	

SHERCO

		Enduro 2.5i F (4T) (inc SE models)	2008 - 2010	FL	
		Enduro 4.5i	2004 - 2010	FL	
SM		2.5i Supermotard	2008 - 2008	FL	
SM		5.1 iF Supermotard	2007 - 2007	FL	
SC	125	Factory	2019 - 2020	FL	
SE-R	125		2019 - 2020	FL	
2.5i	250	Enduro (4T)	2006 - 2009	FL	
SC	250	Factory	2019 - 2020	FL	
SCF	250	Factory	2019 - 2020	FL	
SE	250	Factory	2019 - 2020	FL	
SE	250	i Enduro (Brembo rear Caliper) (2T)	2012 - 2015	FL	
SE-R	250		2019 - 2020	FL	
SE-R	250	(2T)	2012 - 2015	FL	
SEF	250	(4T)	2013 - 2015	FL	
SEF	250	Factory	2019 - 2020	FL	
SEF-R	250		2019 - 2020	FL	
SEF-R	250	(4T)	2013 - 2015	FL	
SX	250	2.5i Moto Cross	2010 - 2010	FL	
	300	Enduro SE 3.0i (4T)	2010 - 2010	FL	
SC	300	Factory	2019 - 2020	FL	
SCF	300	Factory	2019 - 2020	FL	
SE	300	Factory	2019 - 2020	FL	
SE-R	300		2019 - 2020	FL	
SE-R	300	(2T)	2012 - 2015	FL	
SEF	300	(4T)	2013 - 2015	FL	
SEF	300	Factory	2019 - 2020	FL	
SEF-R	300		2019 - 2020	FL	
SEF-R	300	(4T)	2013 - 2015	FL	
	450	4.5 i Enduro	2004 - 2004	FL	
4.5i	450	Enduro	2005 - 2011	FL	
SCF	450	Factory	2019 - 2020	FL	
SE	450	iR Enduro (Nissin Rear Caliper)	2012 - 2012	FL	
SE-R	450		2019 - 2020	FL	
SE-R	450	(2T)	2014 - 2015	FL	
SEF	450	(4T)	2014 - 2015	FL	
SEF	450	Factory	2019 - 2020	FL	
SEF-R	450	(4T)	2014 - 2015	FL	
SM	450		2004 - 2008	FL	
SM	450	i	2004 - 2009	FL	
SCF	500	Factory	2019 - 2020	FL	
SEF	500	Factory	2019 - 2020	FL	
SEF-R	500		2019 - 2020	FL	
	510	Enduro 5.1iF	2007 - 2010	FL	
5.1i	510	Enduro (4T)	2006 - 2009	FL	
5.1i	510	Supermotard	2006 - 2009	FL	
SE	510	iR (Nissin Rear Caliper)	2012 - 2012	FL	
SM	510	5.1iF Supermotard	2007 - 2007	FL	

SINNIS

RSX	125		2019 - 2020	FL	

SUZUKI

UH	125	K2/K3/K4/K5/K6 Burgman	2002 - 2006	FL	

PART NUMBER

031

AD	K1	K5	K5-LX	S3	S33 RACING

SWM					
MC	125	R	2018 - 2018	FL	
RS	125	R	2016 - 2017	FL	
SM	125	R	2016 - 2017	FL	
MC	250	S	2016 - 2016	FL	
FT	300	R (RS 300 R Flat Track)	2017 - 2017	FL	
RS	300	R (4T)	2015 - 2020	FL	
RS	340	S	2016 - 2016	FL	
RS	500	R (4T)	2015 - 2018	FL	
RS	650	R	2016 - 2018	FL	
TM					
	80	/85/100 Junior Cross (Small wheel)	2002 - 2004	FL	
	80	/85/100 (Big wheel)	2002 - 2004	FL	
	80	/85/100 Junior	2005 - 2008	FL	
	80	Cross	1996 - 2001	FL	
	80	Enduro	1996 - 2000	FL	
	85	Cross	1996 - 2001	FL	
MX	85		1994 - 2002	FL	
MX	85	JR (Small Wheel)	2005 - 2015	FL	
MX	85	(Big Wheel)	2002 - 2004	FL	
MX	85	(Big Wheel)	2005 - 2015	FL	
MX	85	JR	2002 - 2004	FL	
	125	Cross	1995 - 2000	FL	
	125	Enduro	1995 - 2000	FL	
EN	125	/250/250 F-ES/450 F-ES	2003 - 2004	FL	
EN	125	Enduro (2T)	2001 - 2004	FL	
EN	125	Enduro (2T)	2005 - 2009	FL	
EN	125	Enduro (2T)	2010 - 2014	FL	
EN	125	Enduro (2T)	2015 - 2015	FL	
EN/MX	125	/144/250/300/450/530 All models	2010 - 2014	FL	
EN/MX	125	/144/250/300/450/530 All models	2015 - 2015	FL	
MX	125		1996 - 2000	FL	
MX	125	(2T)	2001 - 2004	FL	
MX	125	(2T)	2005 - 2009	FL	
MX	125	(2T)	2010 - 2014	FL	
MX	125	(2T)	2015 - 2015	FL	
SMX	125		2006 - 2014	FL	
EN	144	(2T)	2008 - 2009	FL	
EN	144	Enduro (2T)	2010 - 2014	FL	
EN	144	Enduro (2T)	2015 - 2015	FL	
MX	144	(2T)	2008 - 2009	FL	
MX	144	(2T)	2010 - 2014	FL	
MX	144	(2T)	2015 - 2015	FL	
	250	Cross	1995 - 2000	FL	
	250	E	1995 - 2000	FL	
	250	Enduro	1995 - 2000	FL	
EN	250	(2T)	2005 - 2009	FL	
EN	250	(2T)	2010 - 2014	FL	
EN	250	(2T)	2015 - 2015	FL	
EN	250	Enduro (2T)	2001 - 2004	FL	
EN	250	F (4T) Enduro	2005 - 2009	FL	
EN	250	F Enduro (4T)	2004 - 2004	FL	
EN	250	Fi (4T) Enduro	2010 - 2014	FL	
EN	250	Fi (4T) Enduro	2015 - 2015	FL	
MX	250	(2T)	2001 - 2004	FL	
MX	250	(2T)	2005 - 2008	FL	
MX	250	(2T)	2010 - 2014	FL	
MX	250	(2T)	2015 - 2015	FL	
MX	250	(4T)	2002 - 2004	FL	
MX	250	(4T)	2005 - 2009	FL	
MX	250	Cross (4T)	2002 - 2014	FL	
MX	250	Fi (4T)	2010 - 2014	FL	
MX	250	Fi (4T)	2015 - 2015	FL	
	265	Enduro	1994 - 2002	FL	
	300	Cross	1995 - 2000	FL	
	300	Enduro (2T)	1995 - 2000	FL	
EN	300	Enduro (2T)	2001 - 2004	FL	
EN	300	Enduro (2T)	2005 - 2009	FL	
EN	300	Enduro (2T)	2010 - 2014	FL	
EN	300	Enduro (2T)	2015 - 2015	FL	
MX	300		1998 - 2000	FL	
MX	300	(2T)	2001 - 2004	FL	
MX	300	(2T)	2005 - 2009	FL	
MX	300	(2T)	2010 - 2014	FL	
MX	300	(2T)	2015 - 2015	FL	
MX	320		1996 - 2000	FL	
	400	Cross (4T)	1995 - 2000	FL	
MX	400	Cross (4T)	2002 - 2003	FL	
MX	400	F	2000 - 2000	FL	
EN	450	/530 Supermoto wit 320mm Disc	2005 - 2009	FL	
EN	450	F (4T)	2004 - 2004	FL	
EN	450	F (4T)	2004 - 2015	FL	
EN	450	Fi	2005 - 2009	FL	
EN	450	Fi (4T) Enduro	2010 - 2014	FL	
EN	450	Fi (4T) Enduro	2015 - 2015	FL	
FT	450	Fi	2017 - 2017	FL	
MX	450	F	2004 - 2004	FL	
MX	450	Fi (4T)	2005 - 2009	FL	
MX	450	Fi (4T)	2010 - 2014	FL	
MX	450	Fi (4T)	2015 - 2015	FL	
	530	Cross (4T)	1998 - 2000	FL	
EN	530	F (4T)	2004 - 2004	FL	
EN	530	F (4T) Enduro	2011 - 2014	FL	
EN	530	F (4T) Enduro	2015 - 2015	FL	
EN	530	F Enduro	2005 - 2009	FL	
MX	530	(4T)	2001 - 2004	FL	
MX	530	F	2005 - 2009	FL	
MX	530	F	2010 - 2014	FL	
MX	530	F	2015 - 2015	FL	
TRIUMPH					
	800	Tiger XCa (ABS) from VIN 855532	2018 - 2020	FL	FR
	800	Tiger XCx (ABS) from VIN 855532	2018 - 2020	FL	FR
	800	Tiger XRt (ABS) from VIN 855532	2018 - 2020	FL	FR
	800	Tiger XRx (ABS) from VIN 855532	2018 - 2020	FL	FR
	1 200	Bonneville Bobber Black (Liquid Cooled)	2018 - 2020	FL	FR
	1 200	Bonneville Speedmaster (Liquid Cooled)	2018 - 2018	FL	FR
VECTRIX					
		Electric 3W (MP3 style scooter)	2007 - 2014	RR	
		Electric std scooter	2007 - 2008	FL	RR
VX-1		(Li/NiMh)	2007 - 2014	FL	RR
VX-3		Li+ (3 wheeler model)	2012 - 2013	RR	
VERTEMATI					
		All models (2 piston Brembo)	1999 - 2004	FL	
VOR					
		All models	1999 - 2004	FL	
		All Models (2 Piston Brembo)	2003 - 2004	FL	
	400	Cross	2000 - 2001	FL	
	400	Enduro	2000 - 2001	FL	
EN	400		2002 - 2004	FL	
MX	400		2002 - 2004	FL	
EN	450		2002 - 2004	FL	
MX	450		2002 - 2004	FL	
	500	492 Enduro	1999 - 2004	FL	
	500	492 Supermotard	2000 - 2001	FL	
	500	495 Cross	1999 - 2004	FL	
MX	503	Enduro	2000 - 2001	FL	
EN	530		2002 - 2004	FL	
MX	530		2002 - 2004	FL	
SM	530		2002 - 2004	FL	

AD	K1	K5	K5-LX	S3	S33 RACING

PART NUMBER

031

WRM

MX	450		2006 - 2006	FL

YAMAHA

GT	125	Hammerhead	2012 - 2018	FL
XQ	125	/150 N Maxter	2001 - 2003	FL
YBA	125	Enticer (3P01/3P41)	2005 - 2006	FL
YP	125	Majesty	1998 - 2001	FL
YP	125	Majesty	2002 - 2009	FL
YZF-R	125		2008 - 2013	FL
XQ	150	Maxter	2001 - 2003	FL
YP	150	Majesty (SG08/EBE0)	1998 - 2000	FL
YP	150	Majesty (SG08/EBE0)	2001 - 2001	FL
YP	180	R Majesty	2004 - 2004	FL
VP	300	Versity	2003 - 2005	FL RR
XC	300	V Versity	2006 - 2006	FR RR
TT	600	E (4GV2)	1994 - 1995	FL
TT	600	E (4LW3/4LW4/4GV4/4GV5)	1994 - 2001	FL
TT	600	K (4LW1/4GV1/4LW2) Up to 4GV 003403 (Nissin Rear Caliper)	1993 - 1995	FL
TT	600	K From 4GV 003404 (Brembo Rear Caliper)	1995 - 1996	FL
TT	600	R (5CH1/5CH2/5CH3)	1997 - 2002	FL
TT	600	RE (5CH5)	2004 - 2004	FL
XT	660	Z Tenere (ABS)	2008 - 2016	FL
XT	660	Z Tenere (Non ABS)	2008 - 2015	FL
XT	660	ZA Tenere (ABS)	2011 - 2016	FL
XT	700	Z Tenere	2018 - 2020	FL

EQUIVALENTS OEM

546 13 209 044	5CH F5911 00	5DS F5811 00	4GV F5911 00	8000 88482	5NR F5811 00	5SE F5811 00
8A0074181	8B0074181	8C0074181	AB024	AB024 S	59330 49F00	5SE F5811 10
K00976315	497396	800074181	503 13 030 100	8113593	0624	59330 49F00
00306546250	613 4 072 1A	BQ300222068	K00976315	80009634	BQ300222065	56325 R
GU05654630	GU30654675	8133516	34 11 7 717 292	34 11 7 717 308	5D7 FS811 00	11D FS811 00
770 13 020 000	69107	69116	860883	1679	647074	894047
3710	07849312/27	5SU W0045 00	107 861750	M9467Z04	503 13 030 000	777 13 030 000
61340721A	41300161	61321161A	F000P02030	8000A7143	800096934	T2022314
61341161A	BRK-PAD-0017					

PART NUMBER

032

AD	S3	S33 RACING	GP5	GP6	GP7

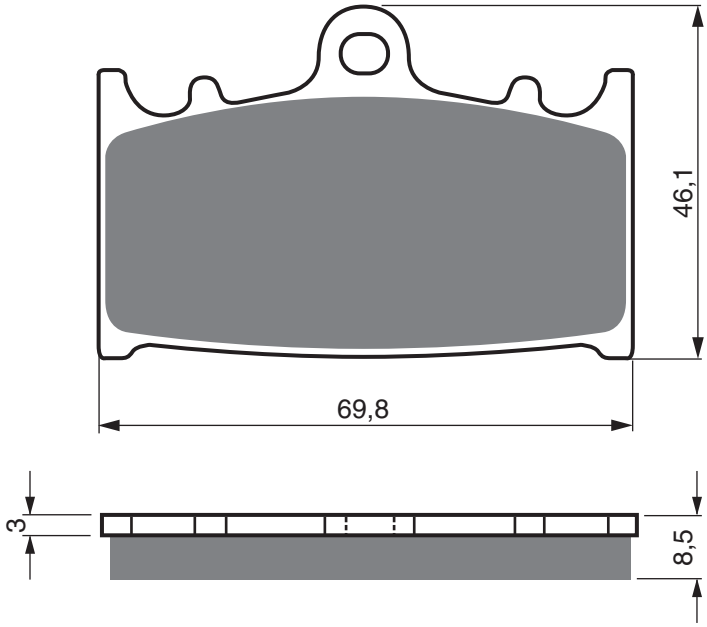

FOR BERINGER

		4 Piston (Old Design)		FL	

HUSABERG

		4 piston calipers	2001 - 2013	FL	
FS	400	E,C	2001 - 2002	FL	
FS	650	E,C	2001 - 2005	FL	

KAWASAKI

KR-1S	250	(KR 250 C2/C3)	1990 - 1992	FL	FR
ZR	400	Zephyr (G2/G3/G4/G5)	1997 - 2001	FL	FR
ZXR	400	H1/H2	1989 - 1990	FL	FR
ZXR	400	J1/J2	1989 - 1990	FL	FR
ZXR	400	R (ZX 400 M1-M4)	1991 - 1994	FL	FR
ZZ-R	400	(ZX 400 K1/K2/K3)	1990 - 1992	FL	FR
ZZ-R	400	(ZX 400 N1/N2/N3/N4/N5/N6/N7)	1993 - 1999	FL	FR
ZX-6R	600	(ZX600 F1-F3)	1995 - 1997	FL	FR
ZZ-R	600	(ZX 600 D1-D3)	1990 - 1993	FL	FR
ZZR	600	(ZX 600 E1-E13)	1993 - 2005	FL	FR
ZZR	600	(ZX 600 E6F)	2006 - 2007	FL	FR
ZX-7R	750		1989 - 1995	FL	FR
ZXR	750	H1/H2/J1/J2	1989 - 1992	FL	FR
ZXR	750	K1/L1/L2/L3/M1/M2	1993 - 1995	FL	FR
ZXR	750	R (ZX750H/F102)	1990 - 1992	FL	FR
ZXR	750	Ram-Air (ZX750L/G154)	1993 - 1995	FL	FR
GPZ	900	R (ZX 900 A11)	1998 - 1998	FL	FR
GPZ	900	R A7/A8	1990 - 1996	FL	FR
ZX-9R	900	(ZX 900 B1/B2)	1994 - 1995	FL	FR
KLX	1 000	Versys LT ABS	2018 - 2020	FL	FR
KLZ	1 000	ACF/ADF/AEF/BFF/B6F Versys	2012 - 2018	FL	FR
KLZ	1 000	SE LT Versys (BJF) (ABS)	2018 - 2020	FL	FR
ZR	1 100	A1-A4 "Zephyr"	1992 - 1995	FL	FR
ZZR	1 100	(ZX 1100 C1-C3)	1990 - 1992	FL	FR
ZZR	1 100	(ZX 1100 D1-D9	1993 - 2001	FL	FR
ZZR	1 100	(ZXT10D/G203)	1994 - 1994	FL	FR
ZZR	1 200	C1H/C2H	2002 - 2004	FL	FR
VN	1 700	B9F/BAF/BBF/BCF/BDF/BEF/BFF/BGF/BHF/BJF Voyager (ABS)	2009 - 2020	FL	FR
VN	1 700	DAF/DBF/DCF/DDF/DEF Classic Tourer ABS	2010 - 2014	FL	FR
VN	1 700	DFF/DGF Vulcan Nomad	2015 - 2016	FL	FR
VN	1 700	FAF/FBF/FCF/FDF/FEF Classic ABS	2010 - 2014	FL	FR
VN	1 700	KBF/KCF/KDF/KEF Voyager Custom	2011 - 2014	FL	FR
VN	2 000	A1/A2/A6F	2004 - 2008	FL	FR
VN	2 000	H8F/H9F Classic	2008 - 2009	FL	FR

MOTO MASTER

		4 Piston		FL	

PRE TECH

		4 Piston (P402) Lockheed replacement caliper		FL	

PRO ONE

		4 Piston Caliper		FL	

SUZUKI

RG	125	FN/FP/FR (NF13A) Gamma / Rear Disc Model	1992 - 1994	FL	
RG	125	FUN/FUP/FUR (NF13B) Gamma / Rear Disc Model	1992 - 1994	FL	
GSXR	250	RK (GJ73A)	1989 - 1989	FL	FR

AD | S3 | S33 RACING | GP5 | GP6 | GP7

PART NUMBER

032

RGV	250	J/K/L	1988 - 1990	FL	FR
RGV	250	M/N/P/R/S	1991 - 1995	FL	FR
TV	250	J (VJ21A) Wolf	1988 - 1988	FL	
TV	250	K/AK/L (VJ21A) Wolf	1989 - 1990	FL	
SG	350	N "Goose"	1992 - 1992	FL	
GSF	400	K/NK/Z/VM/VZM/P/NP/VP/VZP/VR (GK75A) "Bandit"	1989 - 1994	FL	FR
GSF	400	S/VS/V-V/VZ-V Bandit (GK7AA)	1995 - 1997	FL	FR
GSR	400	K6/K7/K8	2006 - 2008	FL	FR
GSX	400	SSN (GK77A) Katana	1992 - 1992	FL	FR
GSX-R	400	J/RR/RAK (GK73A)	1988 - 1990	FL	FR
GSX-R	400	K6/K7/K8	2006 - 2008	FL	FR
GSR	600	K6/K7/K8	2006 - 2010	FL	FR
GSX-R	600	K1/K2/K3/ZK3	2001 - 2003	FL	FR
GSX-R	600	V/W/X/Y	1997 - 2000	FL	FR
GSF	650	AK7/AK8/AK9/AK0/AL1/AL2 Naked Bandit ABS	2007 - 2012	FL	FR
GSF	650	K6/SAK6/K7/SAK7(Bandit ABS)	2007 - 2007	FL	FR
GSF	650	K7/K8/K9/L0/L1/L2 Naked Bandit / Non ABS	2007 - 2012	FL	FR
GSF	650	SAK7/SAK8/SAK9/SAL0/SAL1/SAL2 Faired Bandit ABS	2007 - 2015	FL	FR
GSX	650	FAK8/FAK9/FAL0/FAL1/FAL2 (ABS Model)	2008 - 2015	FL	FR
GSX	650	FK8/FK9/FL0/FL1/FL2	2008 - 2012	FL	FR
GSX	650	SK7/SK8/SK9 Faired Bandit / Non ABS	2007 - 2009	FL	FR
GSX-R	750	Y/K1/K2/K3	2000 - 2003	FL	FR
SV	1 000	K3/K4/K5/K6/K7	2003 - 2007	FL	FR
SV	1 000	SK3/SK4/SK5/SK6/SK7 Faired Model	2003 - 2007	FL	FR
TL	1 000	SV/SW/SX/SY/SK1	1997 - 2001	FL	FR
GSF	1 200	K6/AK6 "Naked Bandit" (ABS & Non ABS Models / 4 Piston Caliper)	2006 - 2006	FL	FR
GSF	1 200	SK6/SAK6 "Faired Bandit" (ABS & Non ABS Models / 4 Piston Caliper)	2006 - 2006	FL	FR
GSF	1 250	AK7/AK8 ABS Model Naked Bandit 4 Piston Caliper	2007 - 2008	FL	FR
GSF	1 250	AK7/AK8/AK9 (Bandit ABS)	2007 - 2016	FL	FR
GSF	1 250	K6/AK6 ABS & Non ABS Naked Bandit 4 Piston Caliper	2006 - 2006	FL	FR
GSF	1 250	K7/K8/K9/L0 Non ABS Naked Bandit 4 Piston Caliper	2007 - 2011	FL	FR
GSF	1 250	SAK7/SAK8/SAK9/SAZK9/SAL0/SAL1/SAL2/SAL4/SAL5/ SAL6 Faired Bandit (4 Piston Caliper) (ABS)	2007 - 2016	FL	FR
GSX	1 250	FAL0/FAL1/FAL2/FAL4/FAL5/FAL6	2010 - 2016	FL	FR
GSX	1 250	FAL0ST/FAL1ST Sports Tourer	2010 - 2014	FL	FR
VERTEMATI					
		4 piston caliper	1999 - 2004	FL	

EQUIVALENTS OEM

43082 1097	43082 1102	43082 1110	43082 1111	43082 1113	43082 1120	43082 1142
43082 1208	43082 1288	59100 22810	59100 32820	59100 34830	59100 35880	59101 35810
59130 06C00	59130 22D00	59130 32000	59130 32020	59130 32C00	59130 32C10	59130 32C20
59130 38C00	59300 34830	59100 35830	59100 35850	43082 0015	43082 1169	2654F/S/R2
43082 0016	43082 0153					

PART NUMBER

033

AD	K1	K5	S3

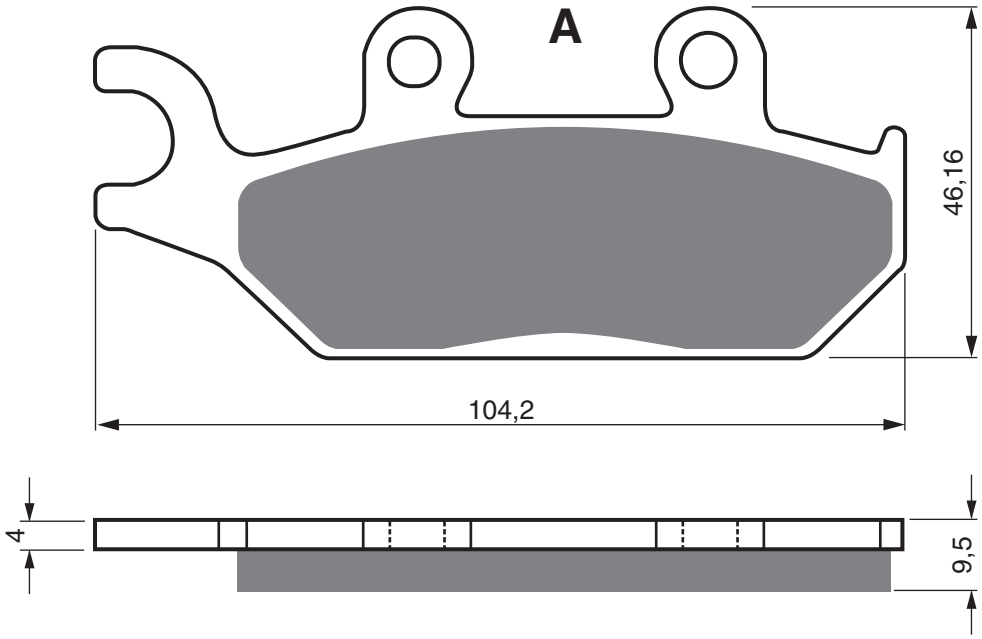

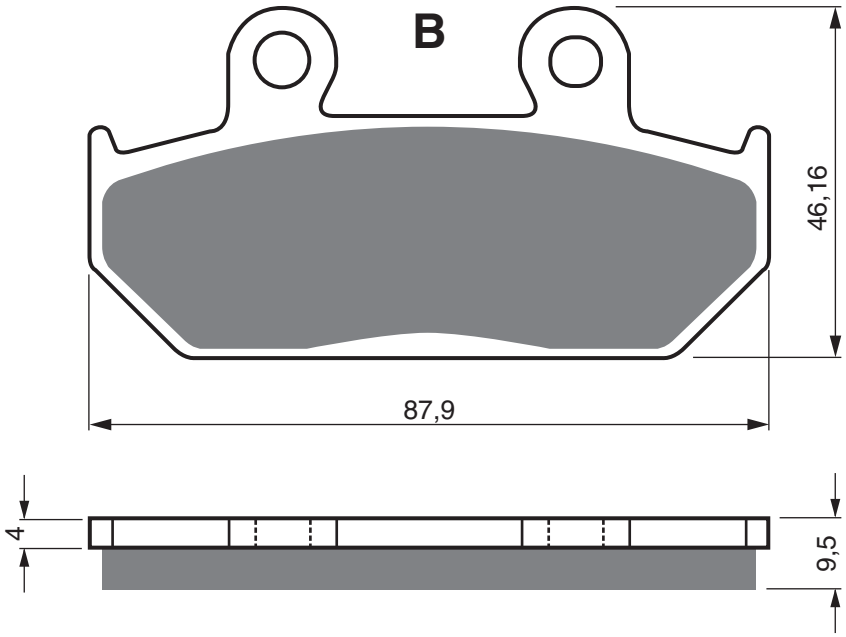

CAN-AM

1 000	Commander Max DPS/XT	2014 - 2017	FR
1 000	Commander R EFI	2018 - 2019	FR
1 000	Maverick Max	2016 - 2017	FR
1 000	Maverick Max STD/XRS/DPS	2015 - 2016	FR

YAMAHA

TZR	50		1993 - 2002	RR
XT	500	E (Austria)	1990 - 1996	FL
XT	600	E	1992 - 1994	FL
XT	600	E Supermotard with 320mm disc	1995 - 2003	FL
XTZ	660	E "Tenere"	1991 - 1998	FL
YXC	700	E Viking VI EPS (YXC700PF/PXG/PXH/PXJ)	2015 - 2018	FR
YXM	700	E Viking EPS COMO (YXM70VPHG)	2016 - 2016	FR
YXM	700	E Wolverine R (YXE70WPHG)	2016 - 2016	FR
YXM	700	ES - Viking EPS SE (YXM700PSE)	2014 - 2016	FR

EQUIVALENTS OEM

3YF W0045 00	3TB W0045 00	4PT W0045 00	1XD 25805 10

AD	K1	K5	K5-LX	S3	S33 RACING

PART NUMBER

034

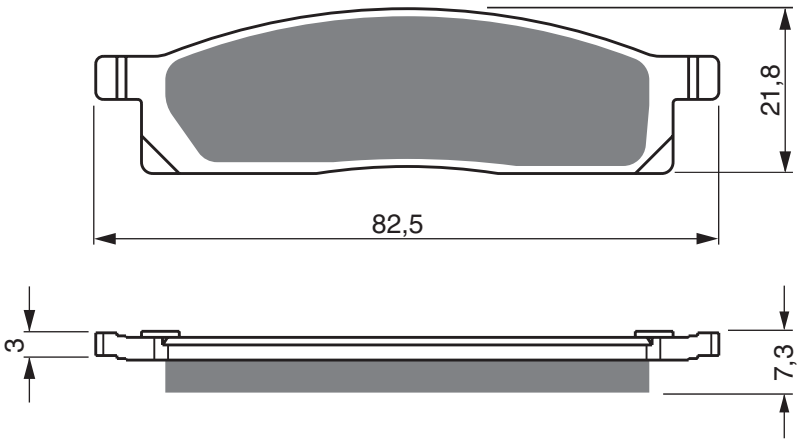

YAMAHA

DT	50	LC	1998 - 1998	FL
YZ	65		2018 - 2021	FL
YZ	80	A, B, D	1990 - 1992	FL
YZ	80	E/F/LWF/LWG/G/LWH/H/LWJ/J/LWK/K/L/LWL/LWM/M/LWN/N	1993 - 2001	FL
YZ	85	(2T - Big wheel F19" / R16")	2002 - 2020	FL
YZ	85	(2T - Small wheel F17"/R14")	2002 - 2015	FL
TT-R	125	LW	2000 - 2020	FL

EQUIVALENTS OEM

1LR W0046 00	2HF W0046 00	2HF W0046 02	3UN W0045 00	4ES W0045 00	4P1 W0045 00
5PA W0045 00					

PART NUMBER

035

AD	K1	K5	S3

A

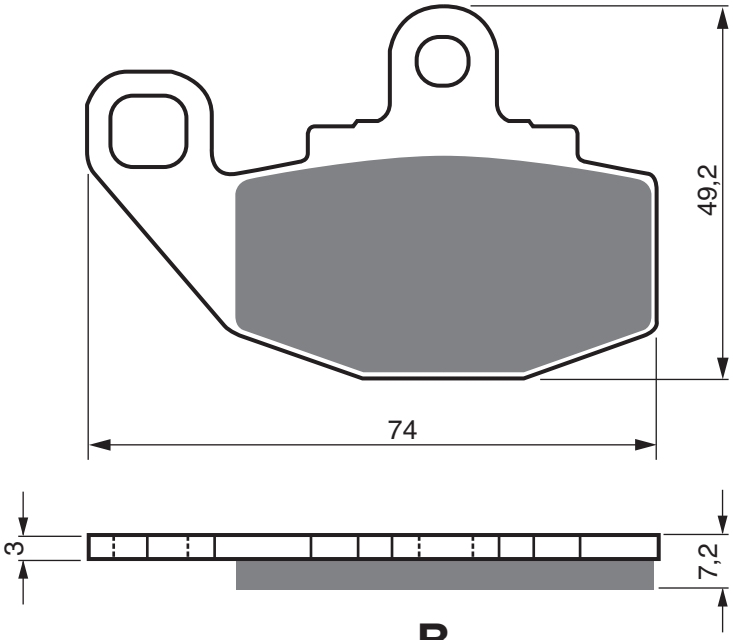

B

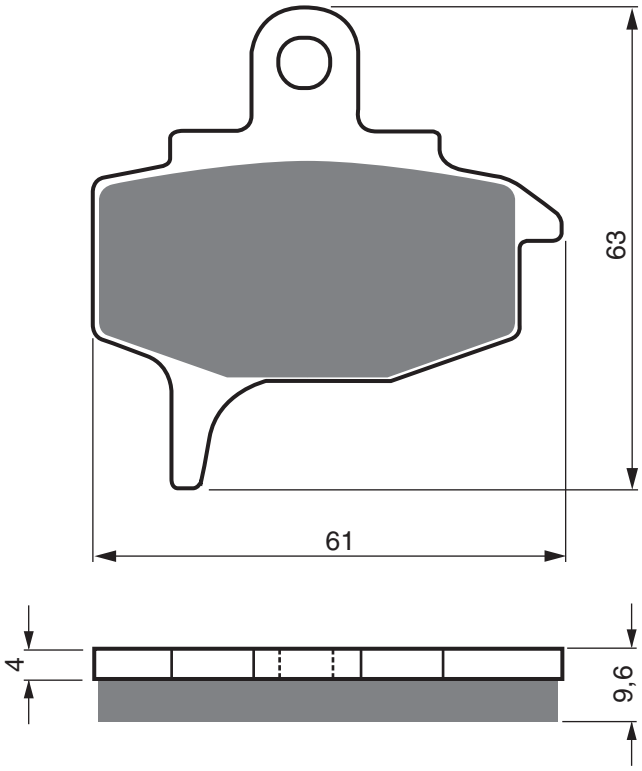

KAWASAKI

KX	125	E2/F1	1987 - 1988	FL
KX	250	E1/F1	1987 - 1988	FL
KX	500	C1/D1	1987 - 1988	FL
KLR	650	A1-A3	1987 - 1989	FL

EQUIVALENTS OEM

43082 1072	43082 1078

AD | S3

PART NUMBER

036

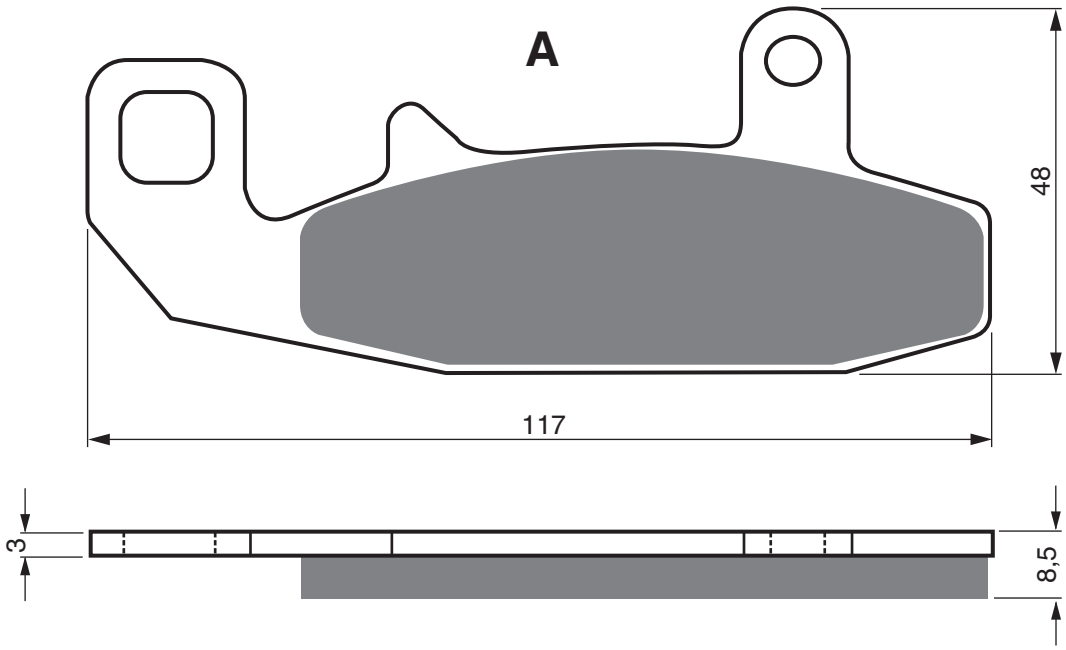

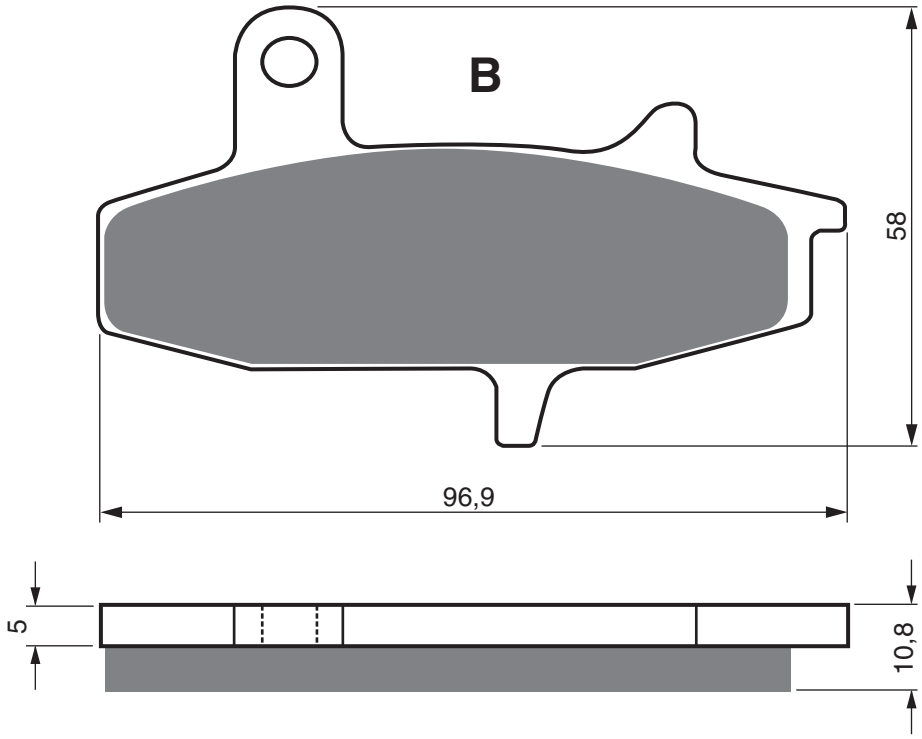

SUZUKI

DR	650	RL/RM (SP41A)	1990 - 1991	FL
DR	650	RSL/RSM (SP42A)	1990 - 1991	FL
DR	650	RSEM/RSEN/RSEP (SP43A/B)	1991 - 1993	FL
DR	650	RUN/RN/RUP/RP (SP44A/B)	1992 - 1993	FL
DR	650	RER/RES (SP45A/B)	1994 - 1995	FL
DR	750	SJ	1988 - 1988	FL
DR	750	SK	1989 - 1989	FL
DR	800	SL	1990 - 1990	FL

EQUIVALENTS OEM

5 930 044 850

Disc Brake Pads

PART NUMBER

037

AD | S3 | S33 RACING

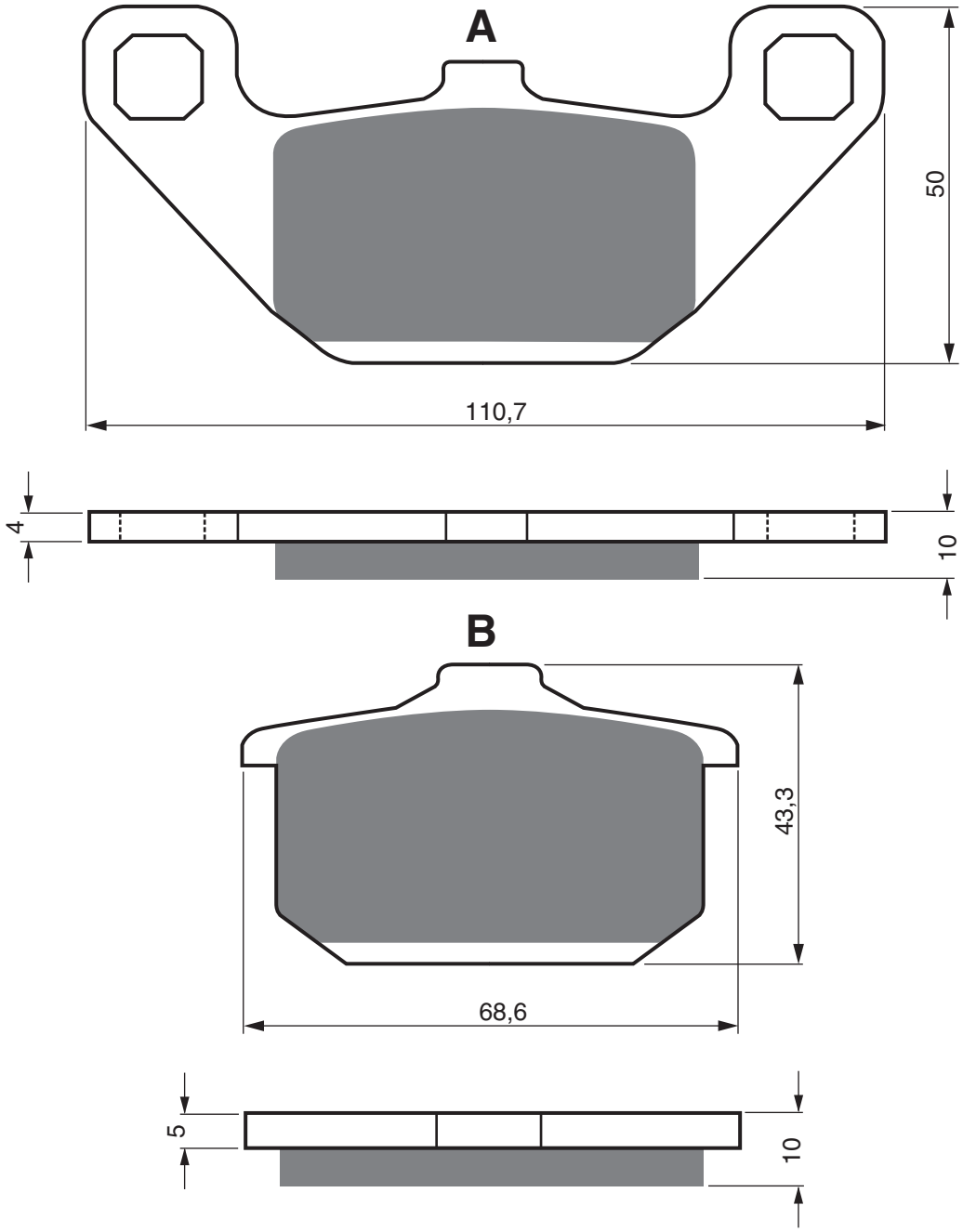

GENERIC

	125	Vertigo (4T)	2012 - 2014	FL	

HYOSUNG

		GA-4	1999 - 1999	FL	

KAWASAKI

EL	250	D1-D5	1990 - 1994	FL	
EL	250	Eliminator	1987 - 1989	FL	
ER	250	B1-B3 (Z250T Scorpion)	1983 - 1988	FL	
GPX	250	R (EX 250 E)	1986 - 1986	FL	RR
GPZ	250		1983 - 1983	FL	FR
GPZ	250	R (EX 250 E)	1986 - 1986	FL	RR
KR	250	A1/A2	1984 - 1986	RR	
EL	252	(EL250 F2/F3/F5/F6)	1996 - 2003	FL	
FX	400	(ZX 400 E1-E3)	1986 - 1988	RR	
FX	400	R (ZX 400 E1-E3)	1986 - 1988	RR	
GPZ	400	R (ZX 400 D1/D3/D3A)	1985 - 1987	RR	
Z	400	C2/C3 (Z400 F2)	1985 - 1987	RR	
ZL	400	A Eliminator	1986 - 1987	FL	
EN	450	A1-A6	1985 - 1990	FL	
LTD	454	(EN 450 A1-A5)	1986 - 1989	FL	
EN	500	A1-A3	1990 - 1993	FL	
EN	500	B1-B2	1994 - 1995	FL	

AD | S3 | S33 RACING

PART NUMBER

037

EN	500	C1-C9	1996 - 2004	FL		
GPZ	550	A1-A4 (ZX 550 A1-A4)	1984 - 1987	FL	FR	RR
GPZ	600	R A1-A5A	1985 - 1989	FL	FR	RR
Z	600		1983 - 1983	FL	FR	RR
VN	700	A1 Vulcan	1985 - 1985	FL	FR	
ZN	700	A1/A2 Ltd	1984 - 1985	FL	FR	RR
	750	Vulcan	1993 - 1993	FL		
GPZ	750	A1-A5	1983 - 1987	FL	FR	RR
GPZ	750	E1-E2 (Turbo)	1984 - 1987	FL	FR	RR
GPZ	750	R G2/G3	1985 - 1986	FL	FR	RR
VN	750	A2-A5/A10	1986 - 1994	FL	FR	
Z	750	E1/E1L/Turbo	1984 - 1984	FL	FR	RR
Z	750	K1/K2	1983 - 1984	FL	FR	
VN	800	A1-A3	1995 - 1999	FL		
GPZ	900	R (A1-A6)	1984 - 1989	FL	FR	RR
ZL	900	A1/A2 Eliminator	1985 - 1986	FL	FR	RR
ZX	900	A1, A1L	1983 - 1984	FL	FR	RR

GPZ	1 000	RX (A1-A3)	1986 - 1988	FL	FR	RR
GTR	1 000	(ZG 1000 A1-A7)	1986 - 1993	FL	FR	RR
ZL	1 000	A1	1987 - 1987	FL	FR	RR
ZL	1 000	Eliminator	1986 - 1990	FL	FR	RR
ZR	1 000	A9-A14 (1000 GTR)	1994 - 1999	RR		
GPZ	1 100	A1-A3	1983 - 1985	FL	FR	RR
Z	1 100	GP (KZT10B/C170)	1983 - 1983	FL	FR	RR
Z	1 100	LTD (KZT10A/C077)	1985 - 1985	FL	FR	RR
Z	1 100	R1	1984 - 1984	FL	FR	RR
ZN	1 100	B1, B1L, LTD	1984 - 1984	FL	FR	RR
ZN	1 300	A1, A2, A2L	1983 - 1984	FL	FR	RR
VN	1 500	A6 (VN15)	1992 - 1992	FL	FR	RR
VN	1 500	B2-B6 (VN15SE)	1988 - 1992	FL	FR	RR
VN	1 500	C1/C2 (VN15)	1994 - 1995	FL	FR	RR
VN	1 500	D1/D2/E1/E2 "Classic"	1996 - 1999	RR		
VN	1 500	G1/G2 Classic Tourer	1998 - 1999	RR		

EQUIVALENTS OEM

43082 1029	43082 1031	43082 1057	43082 1061	43082 1062	43082 1080	43082 1167
43082 1194						

PART NUMBER

038

AD	K5	S3	S33 RACING	GP5

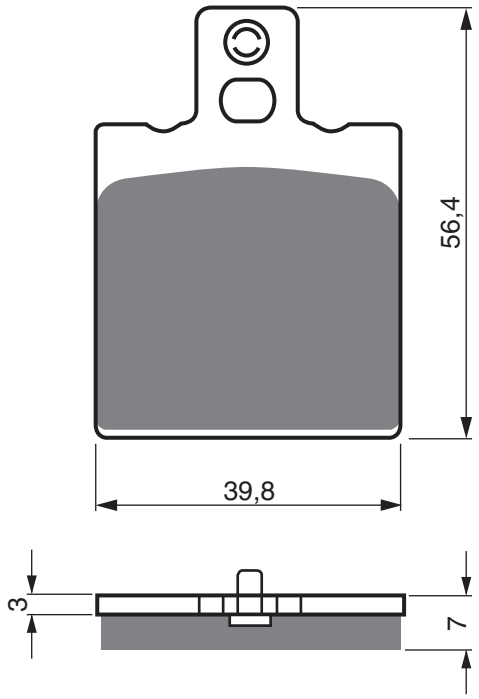

ACCOSSATO

	50	Enduro Codice	1989 - 1989	FL		
CE	50		1987 - 1987	FL		
CE	80		1987 - 1987	FL		
KR	80		1987 - 1987	FL		

AGRALE

		Elefantre 30.0		FL		

ALFER

MC	80		1987 - 1987	FL		
MC	125		1987 - 1987	FL		
MC	125		1988 - 1988	RR		
GR	250	Enduro	1985 - 1987	FL		
GR	250	Enduro	1988 - 1988	RR		
MC	250		1985 - 1986	FL		
MC	250		1987 - 1987	FL	RR	
MC	250		1988 - 1988	RR		
GR	300	Enduro	1988 - 1988	RR		

APRILIA

RS	50	(6 Bolt Fixing Front & Rear)	1993 - 1998	FL		
	125	Red Rose (Cast Wheel)	1987 - 1987	RR		
	125	Tuono	2003 - 2004	RR		
AF	125		1990 - 1991	RR		
AF-1	125		1989 - 1991	RR		
AF1	125		1987 - 1987	RR		
AF1	125		1988 - 1989	RR		
AF1	125		1990 - 1991	RR		
RS	125	(5 bolt rear disc/2T)	1999 - 2005	RR		
RS	125	(6 bolt rear disc / 2T)	1992 - 1998	RR		
RS	250		1995 - 1997	RR		
RS	250		1998 - 2002	RR		
RX	250		1986 - 1986	FL		

BENELLI

	124	125 2C/125 2T/2CSE	1976 - 1976	FL		
	125	T	1983 - 1983	FL		
666	125	Born in Hell	1998 - 1999	RR		
	150	Uno C (Single Cyl)	2013 - 2013	RR		
	250	C/TS, 250/4	1976 - 1976	FL		
	250	Uno C (Single)	2013 - 2013	RR		
BX	250	Motard	2012 - 2012	RR		
	304		1983 - 1983	FL		
	354		1982 - 1982	FL	FR	
	354	Sport 2	1983 - 1983	FL	FR	RR
	500	-4	1976 - 1976	FL	FR	
	654	Sport	1983 - 1983	FL	FR	RR

BETA

	125	Eikon	2000 - 2006	FL		
	150	Eikon	2000 - 2006	FL		

BIMOTA

		All Models	1989 - 2003	RR		
	992	Tesi 2D	2004 - 2006	RR		
SB8K	992	Santamonica (Suzuki engine)	2007 - 2007	RR		
SB8K	996	Gobert (Suzuki engine)	2006 - 2006	RR		
	1 078	Tesi 3D	2009 - 2013	RR		
DB10	1 078	Motard	2012 - 2013	RR		
DB5R	1 078	R/S	2008 - 2009	RR		
DB6	1 078		2008 - 2009	RR		
DB6	1 078	/R	2008 - 2009	RR		
DB6	1 078	Delirio	2012 - 2013	RR		
DB8	1 078	SP	2012 - 2013	RR		
DB7	1 099		2009 - 2009	RR		

BREMBO RACING CALIPERS

		20 5161 43 or 81 - 2 Piston P 2/32 Rear Caliper (Single pad fixing pin / With anti rattle shim)	-	RR		

CAGIVA

	50	Cucciolo	1997 - 1997	FL		
W4	50		1991 - 1995	FL		
	125	Blues	1992 - 1995	RR		
	125	Cucciolo	2000 - 2000	FL		
	125	Elefant RE	1987 - 1987	FL		
	125	Freccia SY	1989 - 1989	RR		
	125	Mito	1991 - 1992	RR		
	125	Mito	1993 - 2010	RR		
	125	Planet (3 Spoke Wheels)	1998 - 2003	RR		
	125	Planet (6 Spoke Wheels 2nd Series)	1998 - 2003	RR		
	125	Planet (6 Spoke Wheels/1st Series)	1998 - 2003	RR		
	125	Raptor	2003 - 2010	RR		
	125	Supercity	1992 - 1992	RR		
WMX	125		1986 - 1986	FL		

AD | K5 | S3 | S33 RACING | GP5

PART NUMBER

038

SST	250		1980 - 1982	FL		
SX	250		1982 - 1982	FL		
WMX	250		1985 - 1985	FL		
SST	350		1980 - 1982	FL		
	500	Mito	1991 - 1992	RR		
	500	Mito (4T)	2008 - 2008	RR		
T4	500	E	1987 - 1987	FL		
WMX	500		1985 - 1986	FL		
	501	Excaliber RX	1992 - 1992	RR		
	600	River	1995 - 1999	RR		
	650	Elefant	1985 - 1985	RR		
	650	Elefant	1988 - 1989	RR		
CAN-AM						
	200	ASE	1986 - 1986	FL		
	250	ASE	1986 - 1986	FL		
	250	MX LC	1986 - 1986	FL		
	350	ASE	1986 - 1986	FL		
	406	ASE	1987 - 1987	FL		
	500	ASE	1986 - 1986	FL		
	500	MX	1986 - 1986	FL		
	560	Sonic	1986 - 1986	FL		
DB MOTORS						
ZZ	50	Pirat	2000 - 2000	FL		
ZZ	50	Sport	2000 - 2000	FL		
DERBI						
GP1	250		2005 - 2005	RR		
DUCATI						
	400	Monster	1995 - 1997	RR		
	400	Monster (Japan)	2000 - 2004	RR		
	400	Monster (Single Disc)	2000 - 2002	RR		
	400	Monster (Twin Disc)	2003 - 2004	RR		
	400	Monster Dark ie (Japan)	2005 - 2006	RR		
	400	Monster Dark ie (Single Disc)	2005 - 2005	RR		
	400	Monster ie (Japan)	2007 - 2008	RR		
	400	Supersport (Single Disc)	1993 - 1997	RR		
	400	Supersport (Twin Disc)	1993 - 1997	RR		
	500	GTL	1975 - 1975	FL	FR	
	500	GTV Pantah	1977 - 1977	FL	FR	RR
	500	Pantah	1979 - 1979	FL	FR	RR
	500	Sport Desmo	1977 - 1977	FL	FR	RR
	600	Monster	2000 - 2001	RR		
	600	Monster (Single Disc)	1993 - 1999	RR		
	600	Monster (Twin Disc)	1993 - 1997	RR		
	600	Monster City/City Dark	1999 - 1999	RR		
	600	Monster Dark	1998 - 1999	RR		
	600	Pantah	1981 - 1981	RR		
	600	Supersport (Single Disc)	1991 - 1997	RR		
	620	IE Monster (First Series)	2002 - 2005	RR		
	620	IE Monster (Second series)	2003 - 2005	RR		
	620	Monster	2005 - 2006	RR		
	620	Monster Dark	2003 - 2004	RR		
	620	Monster Dark	2005 - 2006	RR		
	620	Monster ie (Single Disc)	2003 - 2004	RR		
	620	Multistrada (Twin Disc/Single Pin Pad Fixing)	2006 - 2006	RR		
	620	Multistrada Dark (Single Disc/Twin Pin Pad Fixing)	2006 - 2006	RR		
	620	Sport	2003 - 2003	RR		
	695	Monster	2007 - 2008	RR		
	748	Biposto	1995 - 1998	RR		
	748	Biposto	1999 - 2002	RR		
	748	R (2 Pad caliper)	2000 - 2000	RR		
	748	R (4 pad Caliper)	2001 - 2002	RR		
	748	S (Biposto)	2000 - 2002	RR		
	748	S (Monoposto)	2000 - 2002	RR		
	748	SP	1995 - 1998	RR		
	748	SP/Monoposto	1999 - 2002	RR		
	748	SPS (748/H199)	1998 - 1999	RR		
	748	Testa Bassa (Mono/Biposto)	2007 - 2007	RR		
	750	Monster	2000 - 2001	RR		
	750	Monster (Single disc)	1996 - 1997	RR		
	750	Monster (Twin Disc)	1996 - 1998	RR		
	750	Monster / Monster Dark	1999 - 1999	RR		
	750	Monster City / City Dark	1999 - 1999	RR		
	750	Monster ie	2002 - 2002	RR		
	750	Paso	1987 - 1990	RR		
	750	Supersport (Single disc)	1991 - 1998	RR		
	750	Supersport (Twin disc)	1991 - 1998	RR		
	800	Monster	2003 - 2004	RR		
	800	Sport	2003 - 2003	RR		
S2R	803	Monster	2005 - 2006	RR		
S2R	803	Monster Dark	2006 - 2006	RR		
	851	Superbike Biposto	1989 - 1992	RR		
	888	Superbike Strada	1994 - 1995	RR		
SP4	888		1992 - 1993	RR		
SP5	888		1992 - 1993	RR		
	900	Monster	1993 - 1999	RR		
	900	Monster City/City Dark	1999 - 1999	RR		
	900	Monster Cromo/Special	1998 - 1998	RR		
	900	Monster IE	2000 - 2001	RR		
	900	Supersport	1989 - 1990	RR		
	900	Supersport / Superlight	1991 - 1997	RR		
	900	Supersport CR USA	1998 - 1998	RR		
	900	Supersport FE	1998 - 1998	RR		
	907	IE	1990 - 1993	RR		
	916	Biposto	1994 - 1996	RR		
	916	Monster S4	2001 - 2002	RR		
	916	Monster S4 Foggy	2002 - 2002	RR		
	916	Senna	1994 - 1998	RR		
	916	SP	1994 - 1996	RR		
	916	SPS (996cc)	1997 - 1998	RR		
S2R	992		2006 - 2006	RR		
	996	(Monoposto/Biposto)	1999 - 2001	RR		
	996	R	2001 - 2001	RR		
	996	S	2001 - 2001	RR		
	996	SPS (996cc)	1999 - 1999	RR		
S4R	996	Monster	2003 - 2006	RR		
S4R	996	Monster (2 pad caliper)	2005 - 2006	RR		
	998	(Monoposto / Biposto) (2 Pad caliper)	2002 - 2003	RR		
	998	Matrix	2004 - 2004	RR		
	998	R	2002 - 2002	RR		
	998	S (4pad Caliper)	2002 - 2004	RR		
	998	S Baylis/Bostrom	2002 - 2002	RR		
S4R	998	Monster Testastretta (Radial 4 pad caliper)	2007 - 2008	RR		
S4RS	998	(Tricolore/ Monster Testastretta) Radial 4 pad caliper	2008 - 2008	RR		
S4RS	998	Monster (Radial 4 pad Caliper)	2006 - 2006	RR		
S4RS	998	Monster Testastretta (Radial 4 pad caliper)	2007 - 2007	RR		
S4R	999	Monster	2007 - 2008	RR		
S4RS	999	Monster	2007 - 2007	RR		
	1 000	Monster Dark	2003 - 2003	RR		
	1 000	Monster ie (992cc)	2004 - 2005	RR		
	1 000	Monster S ie (992cc)	2003 - 2005	RR		
S2R	1 000	Monster (992cc)	2006 - 2008	RR		
FANTIC						
	50	Koala	1988 - 1989	FL	RR	
RC	50	Caballero	1991 - 1991	FL		
	80	Caballero	1991 - 1991	FL		
	80	Caballero RC	1991 - 1991	FL		
	250	Coach	1991 - 1991	FL		
FOR BERINGER						
		6 Piston (Old design / 2 Piston)		RR		

PART NUMBER

038

AD | K5 | S3 | S33 RACING | GP5

GILERA

		Nordwest	1994 - 1994	RR			
RV	50	NGR	1988 - 1988	RR			
	125	CX	1991 - 1991	RR			
	125	HX LE	1983 - 1983	FL			
	125	MX1/MRX	1989 - 1989	RR			
	125	SP 01/ SP 02	1989 - 1989	RR			
	125	XR1/XR2	1989 - 1989	RR			
GFR	125		1994 - 1994	RR			
RX	125		1984 - 1984	FL			
RX	125	Arizona	1988 - 1988	FL			
	200	Fast Bike	1987 - 1987	RR			
RV	200		1985 - 1986	RR			
RV	200	ES	1987 - 1987	RR			
RX	200	/Arizona/Enduro	1985 - 1985	FL			
HX	250	LC	1983 - 1983	FL			
NGR	250		1985 - 1985	RR			
RC	250	Rally	1987 - 1987	RR			
RX	250	Arizona Rally	1986 - 1986	FL			
XRT	350		1990 - 1990	RR			
	500	Saturno S/Bialbero/Piuma	1990 - 1990	RR			
XRT	600		1988 - 1988	RR			

HARRISON BILLET

		Big 4/6 Piston (1296033)		RR			

HM

CRE	50	Six/Baja/Derapage (Brembo Caliper / Kayaba Forks)	1995 - 2002	RR			
CRE	50	Six/Baja/Derapage (Grimeca caliper)	1995 - 2002	RR			
CRE	50	Six/Baja/Derapage Brembo caliper / 41mm Paioli Forks	1995 - 2002	RR			

HONDA

CBR	900	Evolution Blade	1999 - 1999	RR			

HP POWER

	50	Iron (2T)	2010 - 2011	FL			

HRD

WH	125	Road/Red Horse	1985 - 1985	FL			

HUSQVARNA

CR	125		1985 - 1990	FL			
XC	125		1985 - 1986	FL			
	200	Prof	1986 - 1986	FL	FR	RR	
CR	240		1985 - 1986	FL			
CR	250		1985 - 1986	FL			
XC	250		1985 - 1986	FL			
	400	Enduro	1985 - 1985	FL			
	430	Enduro	1985 - 1985	FL			
CR	500		1985 - 1986	FL			
CR	500	CX	1984 - 1985	FL			
TC	500		1986 - 1986	FL			
XC	500		1985 - 1986	FL			
	504		1983 - 1983	FL			
TC	510		1987 - 1988	FL			
TE	510		1986 - 1987	FL			
TE	510		1987 - 1988	FL			
TX	510		1987 - 1988	FL			

HYOSUNG

	125	Boomer/Exceed	2002 - 2003	FL			
	125	Exceed (MS 125/150)	2002 - 2004	FL			
	125	Grand Prix	1999 - 2004	FL			
GPS	125	Grand Prix / Hyper (Rear Drum Model)	1999 - 2004	FL			
GPS	125	Grand Prix Plus (Rear Disc Model)	2000 - 2004	FL			
MSI	125	/150	2005 - 2005	FL			

IRON PEGASUS

		Small Caliper (Single pin fixing)		RR			

ISR

		22-025-XX (4 Piston)		FL			
		22-027 (2 Piston rear)		RR			
		22-028 (2 Piston)		FL			
		22-029 (2 Piston rear)		RR			

ITALJET

	350		1983 - 1983	FL	FR		

KEEWAY

	50	Hacker	2008 - 2010	FL			
ARN	50	(25/45)	2010 - 2011	FL			
	125	Enduro	2007 - 2007	RR			
	125	Hacker	2008 - 2010	FL			
	125	X-Ray	2007 - 2007	RR			
ARN	125		2006 - 2012	FL			
	150	Hacker	2008 - 2010	FL			
ARN	150		2006 - 2010	FL			

KTM

	50	Comet PL, TS, RLW, RS, RS4L (KTM50PL/D548/A)	1986 - 1991	FL			
GP	50	DXL, RS1		FL			
GXE	50		1987 - 1987	FL			
MX	50		1987 - 1990	FL			
GSXC/GS	125		1985 - 1985	FL			
LC	125		1985 - 1985	FL			
LC	125		1986 - 1986	FL	RR		
MX	125		1985 - 1985	FL			
MX	125		1986 - 1986	FL	RR		
MXC	125		1985 - 1985	FL			
MXC	125		1986 - 1986	FL	RR		
XC	125		1985 - 1985	FL			
XC	125		1986 - 1986	FL	RR		
	250	Baja	1986 - 1986	FL			
	250	Country, Baja	1985 - 1985	FL			
GS	250		1985 - 1985	FL			
GSXC	250		1985 - 1985	FL			
LC	250		1985 - 1985	FL			
LC	250		1986 - 1986	FL	RR		
MC	250		1983 - 1984	FL	RR		
MX	250		1983 - 1984	FL	RR		
MX	250		1985 - 1985	FL			
MX	250		1986 - 1986	FL	RR		
MXC	250		1985 - 1985	FL			
MXC/GS	250		1986 - 1986	FL	RR		
XC	250		1985 - 1985	FL			
XC	250		1986 - 1989	FL	RR		
GSXC/GS	300		1985 - 1985	FL			
MX/MXC	300		1985 - 1985	FL			
MX/MXC/ GS	300		1986 - 1986	FL	RR		
XC	300		1985 - 1985	FL			
XC	300		1986 - 1990	FL	RR		
	350	Country Cross	1985 - 1985	FL			
	350	Four Stroke	1983 - 1983	FL			
GS4	350	500 K4	- 1983	FL			
K4	350	500 K4	- 1983	FL			
MX/MXC/ GS	350		1986 - 1986	FL	RR		
XC	350	MC	- 1983	FL			
XC	420	MC	- 1983	FL			
MC	495	Leleu	1982 - 1983	FL			
MX	495	Leleu	1982 - 1983	FL			
GS	500	500 K4 Enduro	1983 - 1983	FL			
LC	500		1985 - 1985	FL			
LC	500		1986 - 1986	FL	RR		
MX	500		1985 - 1985	FL			
MX	500		1986 - 1986	FL	RR		
MX/MXC/ XC-GS	500		1985 - 1985	FL			

AD | K5 | S3 | S33 RACING | GP5

PART NUMBER 038

XC	500	MC	- 1983	FL		
4T	600	Enduro	1984 - 1985	FL		
GS	600		1985 - 1986	FL		
XC	600	Cross	1985 - 1985	FL		
XCE	600	Cross	1985 - 1985	FL		
LAVERDA						
		Montjuic	1976 - 1976	FL	RR	
	50	Gaucho	1992 - 1992	FL	RR	
OR	50	Atlas	1987 - 1987	FL	RR	
CU	125	Ride	1986 - 1986	FL		
GS	125	Lesmo	1986 - 1989	FL	RR	
LZ	125	Sport (Brembo Caliper)	1980 - 1982	FL		
GS	350	Lesmo	1986 - 1986	FL	FR	RR
PF	350	Alpino		FL	FR	RR
RS	350	Alpino		FL	FR	RR
	500	Alpino	1976 - 1976	FL	RR	
OR	600	Atlas	1986 - 1986	RR		
	650	All Models	1994 - 1995	RR		
	650	Ghost	1992 - 1992	RR		
	668	All models	1996 - 1998	RR		
	750	All Models	1998 - 2001	RR		
	1 000	Jota	1995 - 1995	RR		
MAICO						
		All Models	1985 - 1985	FL		
GM	250	LC	1985 - 1986	FL		
MD	250		1983 - 1983	FL	RR	
GM	500	LC	1985 - 1986	FL		
MALAGUTI						
	50	Enduro MEX	1985 - 1986	FL		
	80	Enduro MDX	1984 - 1984	FL		
	125	Ciak	2001 - 2008	FL		
F18	125	Warrior	2000 - 2003	FL		
	150	Ciak	2001 - 2008	FL		
MALANCA						
E2		C80/CS		FL	RR	
	125	GTI		FL	RR	
	125	Mark Enduro	1984 - 1984	FL		
	200	Ciak	2006 - 2008	FL		
MONTESA						
	309	Cota	1989 - 1989	RR		
	310	Cota	1989 - 1989	RR		
	311	(Honda) 260cc	1992 - 1993	RR		
	314	R (Honda)	1994 - 1996	RR		
	315	R (Honda)	1997 - 2000	RR		
	350	Nevada	1992 - 1997	FL	RR	
	350	Nevada Club	1998 - 1999	FL	RR	
	350	V43 II (12 Spoke cast wheels)	1980 - 1985	FL	RR	
NTX	350		1987 - 1990	FL	RR	
V35	350	(12 spoke cast wheels/electronic ignition)	1977 - 1979	FL	RR	
V35	350	Florida	1986 - 1990	FL	RR	
V35	350	II (12 Spoke Cast Wheels)	1980 - 1985	FL	RR	
V35	350	III (10 spoke cast wheels)	1985 - 1987	FL	RR	
V35C	350	Custom (10 spoke cast wheels/points ignition)	1982 - 1986	FL	RR	
V50	500	(12 spoke cast wheels/electronic ignition)	1977 - 1979	FL	RR	
V50	500	III (12 spoke cast wheels)	1983 - 1986	FL	RR	
V50C	500	Custom (10 spoke cast wheels/points ignition)	1982 - 1986	FL	RR	
	650	65 GT	1988 - 1989	FL	RR	
NTX	650		1987 - 1990	FL	RR	
V65	650	Florida (Spoke / Cast Wheel Models)	1985 - 1991	FL	RR	
V65C	650	Custom (10 spoke cast wheels)	1983 - 1986	FL	RR	
	750	Nevada	1991 - 2001	FL	RR	
	750	Nevada Club (From to LK112433)	2000 - 2001	FL		
	750	Nevada Club (Up to LK112433)	1998 - 2000	FL	RR	
	750	Strada/T Roadster	1993 - 1995	FL	RR	
	750	Targa	1990 - 1993	FL	RR	
SP	750	(10 Spoke Cast Wheels)	1990 - 1992	FL	RR	
V75	750	(10 spoke cast wheel/floating front discs)	1996 - 2001	FL	RR	
V75	750	(10 spoke cast wheel/solid front disc)	1992 - 1996	FL	RR	
	1 000	Daytona	1992 - 1995	RR		
	1 000	Daytona RS	1997 - 1998	RR		
	1 000	V10 Centauro GT	1997 - 1999	RR		
	1 000	V10 Centauro Sport	1997 - 1999	RR		
	1 100	Sport Carbs	1994 - 1996	RR		
	1 100	Sport Corsa	1998 - 1999	RR		
	1 100	Sport EFi	1996 - 1999	RR		
	1 100	V11 Ballabio	2003 - 2005	FL		
	1 100	V11 Le Mans	2001 - 2005	RR		
	1 100	V11 Naked	2002 - 2003	RR		
	1 100	V11 Scura	2001 - 2003	RR		
	1 100	V11 Sport	1999 - 2001	RR		
MOTO-GUZZI						
	125	Custom	1985 - 1985	FL		
	125	Enduro TT	1985 - 1985	FL		
BX	125		1992 - 1992	FL	RR	
	240	/4	1977 - 1977	FL		
XE	250	Country	1988 - 1988	FL		
	350	Falco	1988 - 1988	FL	RR	
	350	Imola	1978 - 1978	FL	FR	RR
	350	Nevada	1992 - 1992	FL	FR	
NTX	350		1988 - 1988	FL	RR	
NTX	350		1990 - 1990	FL		
V35	350	C		RR		
V35	350	Florida		RR		
V35	350	GT		FL	RR	
V35	350	II, Imola, Imola II	1977 - 1977	FL	FR	RR
V35	350	TT	1986 - 1986	FL	FR	RR
V50	500	1, 2, 3, Monza Chopper	1977 - 1978	FL	FR	RR
V65	650	Lario	1986 - 1986	FL	FR	RR
V65	650	NTX	1987 - 1987	FL	RR	
V65	650	NTX	1987 - 1987			
V65	650	SP, Choper		FL	FR	RR
V65	650	TT	1986 - 1986	FL	FR	RR
	750	Nevada	1992 - 1992	FL	FR	
	750	Nevada	1997 - 1997	FL	FR	RR
NTX	750		1989 - 1989	FL	RR	
V11	1 100	Ballabio	2003 - 2005	RR		
V11	1 100	Le Mans	2001 - 2005	RR		
V11	1 100	Naked	2002 - 2003	RR		
V11	1 100	Scura	2001 - 2003	RR		
V11	1 100	Sport	1999 - 2001	RR		
XE	250	Country	1988 - 1988	FL		
MOTO-MORINI						
	350	Coguaro		RR		
	350	Coguaro, New York	1990 - 1990	RR		
	350	Dart	1987 - 1987	RR		
	350	Excalibur RLX	1993 - 1993	RR		
	350	Indiana	1988 - 1988	RR		
	350	Kanguro	1987 - 1987	RR		
	400	Dart	1989 - 1989	RR		
	400	S		FL	FR	RR
	500	Sei V Classic	1989 - 1989	FL	FR	
	501	Camel	1988 - 1988	RR		
	501	Coguaro	1989 - 1989	RR		
	501	Excalibur	1989 - 1989	RR		
	501	Excalibur RLX	1993 - 1993	RR		
	501	New York	1989 - 1989	RR		
	650	Indiana	1988 - 1988	RR		
	750	Indiana	1988 - 1988	RR		

PART NUMBER

038

AD	K5	S3	S33 RACING	GP5

MZ

		Mastiff 17" FW/Cast Wheel	1999 - 2005	RR		
		Skorpion Sport/Replica/Cup	1995 - 2001	RR		
		Tour/Traveller	1995 - 2002	RR		
	660	(MUZ) Scorpion Cup	1999 - 2002	RR		
	660	(MUZ) Scorpion Replica	1997 - 2002	RR		
	660	(MUZ) Scorpion Traveller	1999 - 2002	RR		

OSSA

	500	Yanqee	1978 - 2015	RR		

PRO ONE

		2 Piston		FL		

SANGLAS

	400	Y	1979 - 1980	FL	FR	RR
	500	S2	1979 - 1980	FL	FR	RR

SIMSON

	50	Habict CX	2001 - 2001	FL		
	50	Spatz	1999 - 1999	FL		
	50	Sperber	1999 - 1999	FL		
	50	Star	1999 - 1999	FL		
	80	IFA	1989 - 1989	FL		
SR	80	-2 CE		FL		
S	83	CX		FL		
S	83	OR		FL		
	125	Schikra	1999 - 1999	RR		

SWM

	125	GP	1986 - 1986	FL	FR	RR
	250	Explorer	1986 - 1986	FL	RR	

TM

SMM	125	(2T)	2008 - 2015	RR		
SMM	125	Black Dream (Rim brake)	2004 - 2010	RR		
SMM	250	(2T)	2005 - 2014	RR		
SMM	250	(2T)	2015 - 2015	RR		
SMM	250	F (4T)	2010 - 2010	RR		
SMM	300		2006 - 2008	RR		
SMM	300	(2T)	2005 - 2014	RR		
SMM	300	(2T)	2015 - 2015	RR		
SMM	400	(4T) Rim brake	2004 - 2004	RR		
SMM	450	F Black Dream E-S	2008 - 2008	RR		
SMM	530	F Black Dream (Rim brake)	2004 - 2010	RR		

TORNAX

RX	80					FL

VOXAN

		Charade Racing	2006 - 2006	RR		

YAMAHA

TDR	125	R Lightburner (3SH2/3XE2)	1993 - 1994	RR		
TZR	125	R Brembo Caliper (4DL1/4DL2)	1991 - 1993	RR		
TZR	125	RR	1996 - 1996	RR		
SZR	660	RR	1996 - 1997	RR		

ZANELLA

	50	Racing Moped	1992 - 1992	FL		
RZA	125		1992 - 1992	FL		

EQUIVALENTS OEM

8103662	8113016	8113064	8113118	8113196	8113222	8113323
8113638	8113651	8113662	8213197	8213200	19654600	8000 29070
8000 39730	323 627	326 446	341 170	19654600	19654601	491 13 409 044
3SH F5811 20	613 4008 1A	613 4007 71A	43105 NN2 600	8000 46147	8000 90156	2525 242000
8A00 46147	8000 46147	03613 9666	61340 311A	61340 281A	04700 2000037	119 52200
9021035000	252524000	000276546100	613 4 0541A	2547/F/S	211082010	000316546650
00276546100	107 28 86 30	107 5365 13	KA3496535	9021038000	12906040	1296006
GU27654610	211021022	211082010	61340731A			

AD	S3	S33 RACING	GP5	GP6	GP7

PART NUMBER

039

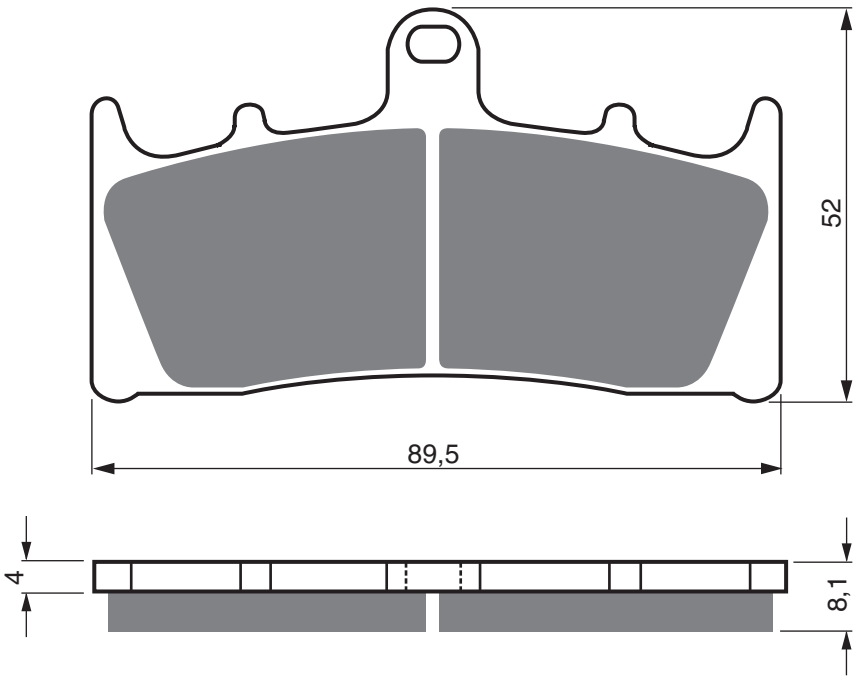

JAYBRAKE

	A4 P/L		FL	
	J-Four (300-44) (4 Piston)		FL	

KAWASAKI

ZX-6R	600	(ZX 600 G1/G2)	1998 - 1999	FL	FR
ZX-6R	600	(ZX 600 J1/J2)	2000 - 2001	FL	FR
ZX-6R	636	(ZX 636 A1P)	2002 - 2002	FL	FR
ZX-7R	750	(ZX 750 P1/P2)/P3/P4/P5/P6/P7)	1996 - 2003	FL	FR
GPZ	900	R (ZX 900 A12-15)	1999 - 2002	FL	FR
ZX-9R	900	(ZX 900 B3/B4)	1996 - 1997	FL	FR
ZX-9R	900	(ZX 900 C1/C2)	1998 - 1999	FL	FR
ZX-9R	900	(ZX 900 E1/E2)	2000 - 2001	FL	FR
ZX-9R	900	Ninja	2000 - 2001	FL	FR
ZRX	1 100	(ZR 1100 C1/C2/C3/C4)	1997 - 2000	FL	FR
ZRX	1 200	R (A1/A2/A3/A4/A5/A6F)	2001 - 2008	FL	FR
ZRX	1 200	S (B1-B3)	2001 - 2004	FL	FR
ZX-12R	1 200	(ZX 1200 A1/A2/B1/B2)	2000 - 2003	FL	FR
VN	1 500	Mean Streak P1/P2	2002 - 2004	FL	FR
VN	1 600	B1 Mean Streak	2004 - 2004	FL	FR

SUZUKI

GSX-R	750	T/V/W/X	1996 - 1999	FL	FR
GSX-R	750	WR/WS	1994 - 1995	FL	FR
GSX-R	1 000	K1/K2	2001 - 2002	FL	FR
TL	1 000	RW/RX/RY/RK1	1998 - 2002	FL	FR
GSX-R	1 100	WP/WR/WS/WT	1993 - 1996	FL	FR
GSF	1 200	K1/K2/K3/K4/K5 "Naked Bandit" (6 Piston Caliper)	2001 - 2005	FL	FR
GSF	1 200	K3/SK3/K4/SK4/K5/SK5 "Bandit"	2003 - 2005	FL	FR
GSF	1 200	SK1/SK2/SK3/SK4/SK5 "Faired Bandit" (6 Piston Caliper)	2001 - 2005	FL	FR
GSX-R	1 300	RX/RY/RK1/RK2/RZK3/RK3/RK4/RK5/K6/K7 Hayabusa	1999 - 2007	FL	FR
GSX	1 400	K1/K2/K3/K4/K5/K6/K7/FE	2001 - 2007	FL	FR
M	1 600	(VZ 1600 K4 Intruder)	2004 - 2004	FL	FR

EQUIVALENTS OEM

43082 1199	43082 1224	59130 46E00	59300 33870	59300 33890	59300 46840/830	59300 46820
43082 1179	43082 1227	43082 1230	43082 1250	43082 1253	43082 1259	43082 1272
43082 1274	59301 33870	59100 46820	43082 1251	59100 40830	K4308-21274	

PART NUMBER

041

AD	K1	K5	K5-LX	S3	S33 RACING

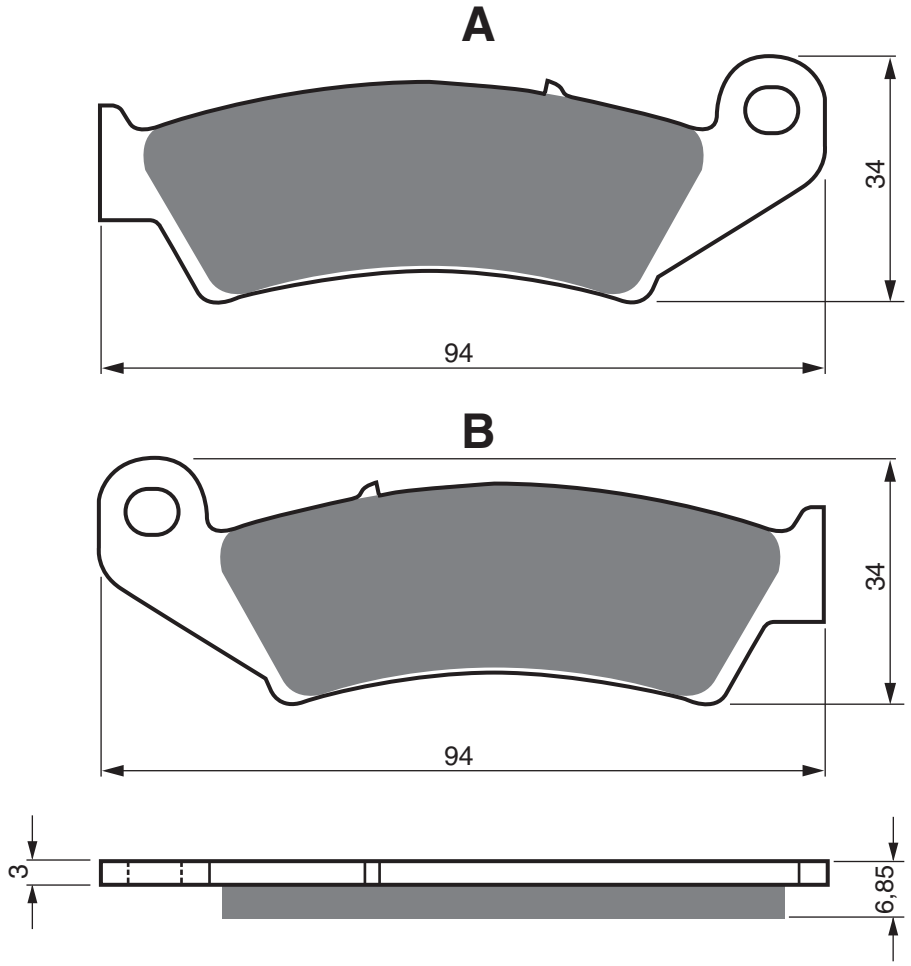

AJP				
PR5	250	Enduro	2009 - 2009	FL
PR5	250	Supermoto	2009 - 2009	FL
ALFER				
AR	250		1993 - 1993	FL
APRILIA				
MXV	450		2009 - 2013	FL
RXV	450	Enduro	2006 - 2013	FL
RXV	550	Enduro	2006 - 2013	FL
BETA				
RR	125	(2T) Inc MY20	2018 - 2020	FL
RR	125	Enduro LC (2T) MY20	2020 - 2020	FL
RR	200	Enduro (2T) MY20	2020 - 2020	FL
RR	250	Enduro (2T)	2013 - 2014	FL
RR	250	Enduro (2T) MY20	2020 - 2020	FL
RR	250	Enduro (4T)	2005 - 2007	FL
RR	250	Enduro RC (2T)	2018 - 2020	FL
RR	250	Racing (2T)	2015 - 2015	FL
	300	X-Trainer (2T)	2015 - 2020	FL
RR	300	Enduro (2T)	2013 - 2014	FL
RR	300	Enduro (2T)	2018 - 2020	FL
RR	300	Enduro (2T) MY20	2020 - 2020	FL
RR	300	Enduro (2T) RC	2018 - 2020	FL
RR	300	Enduro Racing (2T)	2013 - 2014	FL
RR	300	Racing (2T)	2015 - 2015	FL
RR	350	(4T) MY20	2020 - 2020	FL
RR	350	EFi (4T)	2015 - 2015	FL
RR	350	Enduro	2012 - 2012	FL
RR	350	Enduro	2013 - 2014	FL
RR	350	Enduro (4T)	2011 - 2014	FL
RR	350	Enduro (4T) Racing	2015 - 2020	FL
RR	350	Racing (4T)	2015 - 2015	FL
RR	390	(4T)	2015 - 2020	FL
RR	390	Enduro (4T) MY20	2020 - 2020	FL
RR	400	4T Enduro	2005 - 2011	FL
RR	400	Enduro (4T)	2012 - 2014	FL
RR	430	(4T)	2015 - 2015	FL
RR	430	Enduro (4T) MY20	2020 - 2020	FL
RR	450	Cross Country (4T)	2012 - 2012	FL
RR	450	Enduro (4T)	2005 - 2011	FL
RR	450	Enduro (4T)	2012 - 2014	FL

AD	K1	K5	K5-LX	S3	S33 RACING

PART NUMBER

041

RR	450	Enduro Racing (4T)	2015 - 2020	FL
RR	480	(4T)	2015 - 2020	FL
RR	480	Enduro (4T) MY20	2020 - 2020	FL
RR	480	Racing (4T)	2015 - 2020	FL
RR	490	Enduro Racing (4T)	2013 - 2014	FL
RR	498	Enduro (4T)	2012 - 2012	FL
RR	498	Enduro (4T)	2013 - 2014	FL
RR	498	Enduro Racing (4T)	2013 - 2014	FL
RR	520	Enduro 4T	2010 - 2011	FL
RR	525	Enduro (4T)	2005 - 2009	FL

CANNONDALE

MX	400		2000 - 2003	FL
E	440	A, R	2003 - 2003	FL
X	440		2003 - 2003	FL

CPI

	125	Sauel		FL

GAS GAS

	125	Trail Halley	2009 - 2009	FL
EC	125		2010 - 2015	FL
EC	125	(2T)	2000 - 2008	FL
MX	125		2009 - 2011	FL
MX	125	(MC)	2001 - 2008	FL
MX	125	(MC)	2009 - 2011	FL
EC	200	(2T)	2000 - 2008	FL
EC	200	(2T)	2010 - 2015	FL
EC	200	(2T)	2017 - 2017	FL
EC	200	(Euro 4)	2018 - 2020	FL
EC	200	Ranger	2018 - 2020	FL
MX	200		1999 - 2000	FL
EC	250	(2T)	2000 - 2008	FL
EC	250	(2T)	2010 - 2011	FL
EC	250	(2T)	2012 - 2015	FL
EC	250	(Euro 4)	2018 - 2020	FL
EC	250	F (All Models /4T)	2012 - 2015	FL
EC	250	Six Days	2019 - 2019	FL
MX	250		1999 - 2000	FL
MX	250		2009 - 2011	FL
MX	250	(MC)	2001 - 2008	FL
MX	250	(MC)	2009 - 2011	FL
XC	250	(Euro 4)	2018 - 2020	FL
EC	300		2010 - 2015	FL
EC	300	(2T)	2000 - 2008	FL
EC	300	(Euro 4)	2018 - 2020	FL
EC	300	F (4T)	2013 - 2015	FL
EC	300	Ranger	2018 - 2020	FL
MX	300		1999 - 2000	FL
XC	300	(Euro 4)	2018 - 2020	FL
	450	Pampera (4T)	2007 - 2008	FL
EC	450	F (All Models /4T)	2013 - 2015	FL
EC	450	FSE Enduro (4T)	2005 - 2009	FL
EC	450	FSR Enduro (4T)	2005 - 2009	FL
EC	450	Raid	2014 - 2014	FL
SM	450	Halley	2009 - 2009	FL
SM	450	Trail Halley	2009 - 2009	FL
EC	515	FSE Enduro (4T)	2005 - 2009	FL
EC	515	FSR Enduro (4T)	2005 - 2009	FL

GOES

G	125	XM	2008 - 2009	FL
G	250	XM	2008 - 2009	FL

GOLDFREN

		front motocross caliper CP006, CP016		FL

HM

CR	125	Motard	2004 - 2004	FL
CRE	125		1995 - 2001	FL
CRE	125	(Six Competition 2T)	2011 - 2011	FL
CRE	125	R Enduro	2002 - 2003	FL
CRE	125	R Enduro	2004 - 2006	FL
CRE	125	R Supermotard	2003 - 2003	FL
CRM	125	(Derapage RR 2T)	2011 - 2011	FL
CRM	125	(Six Competition 2T)	2010 - 2011	FL
CRF	230	Easy Enduro	2004 - 2007	FL
CRF	230	Easy Motard	2004 - 2007	FL
CRF	230	Easy Trail	2004 - 2007	FL
CRF	230	F Easy Trial (All Models)	2004 - 2007	FL
CRE	250		2002 - 2002	FL
CRE	250	F Enduro	2004 - 2004	FL
CRE	250	R Enduro	2002 - 2006	FL
CRE	250	R Moto	2004 - 2004	FL
CRE	250	R Supermoto	2002 - 2003	FL
CRE	250	X		FL
CRE-F	250	R	2008 - 2009	FL
CRE-F	250	X	2008 - 2011	FL
CRF	250	F	2004 - 2008	FL
CRF	250	Motard	2004 - 2004	FL
CRF	250	R	2008 - 2009	FL
CRE-F	290	X	2007 - 2007	FL
CRE-F	300	X	2008 - 2009	FL
CRE	450	F	2002 - 2002	FL
CRE	450	F Enduro	2002 - 2004	FL
CRE	450	Supermoto	2002 - 2003	FL
CRE	450	X		FL
CRF	450	Motard	2004 - 2006	FL
CRF	450	R	2004 - 2008	FL
CRE-F	490	X	2007 - 2007	FL
CRE-F	500	X	2008 - 2009	FL

HONDA

CR	125	R2	2002 - 2002	FL
CR	125	R3/R4/R5/R6/R7	2003 - 2007	FL
CR	125	RS/RT/RV	1995 - 1997	FL
CR	125	RW/RX/RY/R1	1998 - 2001	FL
CRF	125	F Small wheel (FR17"/RR 14" Wheels)	2014 - 2020	FL
CRF	125	FB Big wheel (FR19"/RR 16" Wheels)	2014 - 2020	FL
XLR	125	RW	1998 - 2001	FL
XR	125	L3/L4/L5/L6/L7/L8	2003 - 2008	FL
CRF	150	F3/F4/F5/F6/F7/F8/F9	2003 - 2020	FL
CTX	200	/CTX 200 A bushlander	2004 - 2016	FL
CRF	230	F AC	2004 - 2020	FL
CRF	230	L	2008 - 2010	FL
CRF	230	M (Supermoto)	2009 - 2010	FL
SL	230	Free Landsports (MD33)V/W/X/1	1997 - 2001	FL
	250	RT/RV/RW/RX/RY/R1/R2/R3/R4	1996 - 2004	FL
CR	250	R2/R3/R4/R5/R6/R7	2002 - 2007	FL
CR	250	RS/RT/RV/RW/RX/RY/R1	1995 - 2001	FL
CRF	250	R4/R5/R6/R7	2004 - 2007	FL
CRF	250	R8/R9/RA/RB/RC/RD/RE/RF/RG	2008 - 2016	FL
CRF	250	RE (Limited Road Use)	2016 - 2016	FL
CRF	250	RF/RG/RH/RJ (260mm F/Disc)	2015 - 2020	FL
CRF	250	RX	2008 - 2020	FL
CRF	250	X	2004 - 2020	FL
CRF	250	XLR (Road Legal)	2014 - 2020	FL
CRM	250	ARV/ARW Active Radial (MD32)	1997 - 1998	FL
CRM	250	RR/RRII (MD24 140) (MK3)	1994 - 1996	FL

PART NUMBER

041

AD | K1 | K5 | K5-LX | S3 | S33 RACING

XL	250	Degree (MD26)	1994 - 1996	FL	
XLR	250	Baja MK2 (MD22)		FL	
XLR	250	RM/R3N/RP/RR/R3R (MD22)	1991 - 1997	FL	
XR	250	3/5 (MD30) Motard	2003 - 2005	FL	
XR	250	III Y/3 Baja	2000 - 2003	FL	
XR	250	RT/RV/RW/RX/RY/R1/R2/R3/R4	1996 - 2004	FL	
XR	250	Y/3 (MD30)	2000 - 2003	FL	
XR	300	R10	2010 - 2010	FL	
NX4	400	Falcon	2002 - 2005	FL	
XR	400	RT/RV/RW/RX/RY/R1/R2/R3/R4	1996 - 2005	FL	
CRF	450	L (18" Rear Wheel)	2018 - 2020	FL	
CRF	450	R (260mm F/Disc)	2015 - 2020	FL	
CRF	450	R2/R3/R4/R5/R6/R7	2002 - 2007	FL	
CRF	450	R8/R9/RA/RB/RC/RD/RE	2008 - 2018	FL	
CRF	450	RE (Limited Road Use)	2016 - 2016	FL	
CRF	450	RX (18" Rear Wheel)	2017 - 2020	FL	
CRF	450	X	2008 - 2020	FL	
CRF	450	X5/X6/X7	2005 - 2007	FL	
CRF	450	XLR (Road Legal)	2014 - 2016	FL	
TRX	450	R4/R5/R6/R7/ER7/R8/ER8/R9/ER9	2004 - 2009	FL	FR
CR	500	RS/RT/RV/RW/RX/RY/R1	1995 - 2001	FL	
XL	600	VV/VW/VX Trans Alp	1997 - 1999	FL	FR
XR	600	RP/RR/RS/RT/RV/RW/RX/RY	1993 - 2000	FL	
XL	650	VY/V1-V7 Transalp	2000 - 2007	FL	FR
XR	650	L	1993 - 2020	FL	FR
XR	650	RY/R1-R7	2000 - 2007	FL	
TRX	700	XX8/XX9/XXB	2008 - 2011	FL	FR
XL	700	V8/V9/VA Transalp (2 Piston Front Caliper/ ABS on Rear Disc)	2008 - 2011	FL	FR
XRV	750	P/R/S/T/V/W/X/Y Africa Twin	1994 - 2003	FL	FR
XR	125	SM	2004 - 2004	FL	
XR	250	R	2004 - 2004	FL	
XR	250	SM	2004 - 2004	FL	
XR	400	/440 R	2004 - 2004	FL	
XR	400	/440 SM	2004 - 2004	FL	
XR	650	R	2004 - 2004	FL	

KAWASAKI

KX	125	/250/500 Supermotard with 320mm disc	2003 - 2005	FL	
KX	125	K1	1994 - 1994	FL	
KX	125	K2/K3/K4/K5	1995 - 1999	FL	
KX	125	L1/L2/L3/L4	1999 - 2002	FL	
KX	125	M1/M2/M3	2003 - 2005	FL	
KX	125	M6F/M7F/M8F	2006 - 2008	FL	
RM	125	K6/K7/K8	2006 - 2008	FL	
KDX	200	H1/H2/H3/H4/H5	1995 - 1999	FL	
KDX	220	R A4/A5/A6/A7/A8/A9/A10/A11/A12/A6F	1997 - 2006	FL	
KDX	220	SR (DX 220B)		FL	
KLX	250	F1-F4 (KLX 250 ES)	1994 - 1997	FL	
KLX	250	G1	1994 - 1994	FL	
KLX	250	J1-J6 D-Tracker	1998 - 2003	FL	
KLX	250	R D1/D2	1993 - 1994	FL	
KLX	250	S H6F/H7F	2006 - 2007	FL	
KX	250	F	2020 - 2020	FL	
KX	250	F	2021 - 2021	FL	
KX	250	F (KX 250 W9F/XAFB/YBF/YCF/ZDF/ZEF) (4T)	2009 - 2014	FL	
KX	250	F (KX 250N1/N2) (4T)	2004 - 2006	FL	
KX	250	F (T6F/T7F/T8F) (4T)	2006 - 2008	FL	
KX	250	F (ZZF/ZGF/AHF/AJF/AKF)	2015 - 2019	FL	
KX	250	K1	1994 - 1994	FL	
KX	250	K2-K5	1995 - 1998	FL	
KX	250	L1/L2/L3/L4	1999 - 2002	FL	
KX	250	M1/M2/R1 (2T)	2003 - 2005	FL	
KX	250	R6F/R7F/R8F (2T)	2006 - 2008	FL	
KX-F	250	DFI	2011 - 2014	FL	
KLX	300	A2/A3/A4/A5/A6/A7/A8/A9/A10/A6F/A7F	1997 - 2007	FL	
KLX	400	R (KLX 400 B1/B2)	2003 - 2004	FL	
KLX	450	R (A8F/A9F/AAF/ABF/ACF/ADF/AEF/AFF/AGF/AHF/AJF)	2008 - 2018	FL	
KX	450	F (4T) 270mm Front/250mm Rear Rotor	2019 - 2020	FL	
KX	450	F (D6F/D7F/D8F/E9F/EAF/EBF/FCF/FDF/FEF)	2006 - 2014	FL	
KX	450	F (ZFF/ZGF/AHF/AJF)	2015 - 2018	FL	
KX	450	F Tomac (JKF) (4T) 270mm Front/250mm Rear Rotor	2019 - 2019	FL	
KX	500	E6-E7	1994 - 1995	FL	
KX	500	E8-A16	1996 - 2004	FL	
KLX	650	C1/C2/C3	1993 - 1997	FL	
KLX	650	R	2001 - 2003	FL	
KLX	650	R (KLX650C/G245)	1993 - 1995	FL	
KLX	650	R D1 (KLX650C/G245)	1996 - 2000	FL	

SUZUKI

DR	125	SMK8/SMK9/SML0	2008 - 2012	FL	
RM	125	K5-K9	2005 - 2012	FL	
RM	125	T/V/W/X/Y/K1-K4	1996 - 2004	FL	
RM	125	XCK8	2009 - 2009	FL	
DR	250	RS/RLS/RT/RV/RLV/RLW/RW/RY (SJ45A/DOHC)	1995 - 2000	FL	
DR	250	RXT/RXLT/RXV/RXLV/RXW/RXLW/RXGW/RXGLW/RXY/ RXGY (Dejbel 250 XC/GPS Ver (SJ45A)		FL	
DR-Z	250	K1-K7 (DJ43A)	2001 - 2007	FL	
RM	250	K5/K6/K7/K8	2005 - 2008	FL	
RM	250	T/V/W/X/K1-K9	1996 - 2012	FL	
RM	250	XCK8	2009 - 2009	FL	
RM-Z	250	K4/K5/K6	2004 - 2006	FL	
RM-Z	250	K7/K8/K9	2007 - 2009	FL	
RM-Z	250	L0/L1/L2/L3/L4/L5/L6/L7/L8/L9	2010 - 2020	FL	
RMX	250	ST/SV/SW/SX (SJ14A)	1996 - 1999	FL	
RMX	250	T/V/W	1996 - 1998	FL	
SBK2	250	(LX 250 L)	2002 - 2002	FL	
DR	350	SEW/SEX (Electric Start / 6 bolt Front Disc)	1998 - 1999	FL	
DR	350	V, W, X	1997 - 1997	FL	
DR-Z	400	SEY/EY/Y/SEK1/EK1/K2/SEK2/EK2/K3/SEK3/EK3/K4/SEK4/ EK4/EK5/SK5/SK6/K6/SK7/K7/EK7/SK8/SK9	2000 - 2009	FL	
DR-Z	400	SMK5/SMK6/SMK7/SMK8/SMK9	2005 - 2009	FL	
RM-Z	450		2020 - 2020	FL	
RM-Z	450	K5/K6/K7	2005 - 2007	FL	
RM-Z	450	K8/K9/L0/L1/L2/L3/L4/L5/L6/L7	2008 - 2017	FL	
RM-Z	450	L8/L9	2018 - 2020	FL	
RMX	450	ZL0/ZL2	2010 - 2015	FL	
DR	650	SET/SEV	1996 - 1997	FL	

YAMAHA

WR	125		1998 - 2001	FL	
YZ	125		2001 - 2001	FL	
YZ	125	K/L/M (2T)	1998 - 2000	FL	
YZ	125	N/P (2T)	2001 - 2002	FL	
YZ	125	R/S/T/V/W (2T)	2003 - 2007	FL	
WR	250	FF/FG (4T/Reverse Cylinder)	2015 - 2016	FL	
WR	250	FN/FP (4T)	2001 - 2002	FL	
WR	250	FR/FS (4T)	2003 - 2004	FL	
WR	250	FT/FV/FW/FX/FY/FZ/FA/FB/FD (4T)	2005 - 2014	FL	
WR	250	R (32D1/3)	2008 - 2020	FL	
WR	250	RX/RY (32D1/3)	2008 - 2010	FL	
WR	250	ZK	1998 - 1998	FL	
YZ	250		2001 - 2001	FL	
YZ	250		2002 - 2002	FL	

AD	K1	K5	K5-LX	S3	S33 RACING

PART NUMBER

041

YZ	250	FN/FP (4T)	2001 - 2002	FL
YZ	250	FR/FS/FT/FV (4T)	2003 - 2006	FL
YZ	250	K/L/M/N/P	1998 - 2002	FL
YZ	250	R/S/T/V/W	2003 - 2007	FL
WR	400	FK	1998 - 1998	FL
WR	400	FL/FM	1999 - 2000	FL
WR	400	FN	2001 - 2001	FL
YZ	400	F	2001 - 2001	FL
YZ	400	F	2002 - 2002	FL
YZ	400	FK	1998 - 1998	FL
YZ	400	FL	1999 - 1999	FL
WR	426	FN/FP	2001 - 2002	FL
YZ	426	FM/FN/FP	2000 - 2002	FL
WR	450	FR/FS/FT/FV/FW/FX/FY/FA/FB/FD/FE/FF (4T)	2003 - 2015	FL
YZ	450	FR/FS/FT/FV/FW	2003 - 2007	FL

ZERO

DS	(ZF8.5/ZF11.4) (Nissin F&R Calipers)	2013 - 2013	FL
DS	(ZF8.5/ZF11.4) (Nissin F/J.Juan R Calipers)	2014 - 2014	FL
FX	(ZF2.8/ZF5.7) (Nissin F/J.Juan R Calipers)	2014 - 2014	FL
FX	(ZF2.8/ZF5.7)(Nissin F&R Calipers)	2013 - 2013	FL
MX	(ZF2.8/ZF5.7) (Nissin F&R Calipers)	2013 - 2013	FL
S	(ZF8.5/ZF11.4) (Nissin F&R Calipers)	2013 - 2013	FL
S	(ZF8.5/ZF11.4) (Nissin F/J. Juan R Calipers)	2014 - 2014	FL
SR	(ZF11.4) (Nissin F/J.Juan R Calipers)	2014 - 2014	FL
XU	(Nissin F&R Calipers)	2013 - 2013	FL

EQUIVALENTS OEM

06455 GZ8 405	06455 KHA 941	06455 MY1 405	06455 MAY 000	06455 KBR 731	06455 KHA 941	06455 MAW 761
06456 MAW 761	06455 MCB 611	06455 HP1 006	06455 HP1 016	06456 MCB 611	06456 MCB 612	43082 124
45105 KTO 405	45105 KZ1 405	45105 MY6 405	45105 MY6 415	45105 KV6 701	45106 KV6 701	43082 0132
43082 1149	43082 1152	43082 1172	43082 1193	43082 1218	43082 1266	43082 S011
43082 S009	43082 1286	45105 KTO 405	45105 KZI 405	45105 KAS 415	5DH W0045 00	5DH W0045 10
5MV W0045 00	59300 13830	59300 13860	59300 36850	59300 36860	59300 36870	59300 3K880
59301 36810	K4308 21225	K4308 21286	BE 2500 22065	BC 2500 22065	59300 29860	43082 0026
9100788	43082 0049	BE250022065	32D W0045 00	252536200	9100788	06455 KCZ 000

PART NUMBER

042

AD	K1	K5	K5-LX	S3	S33 RACING

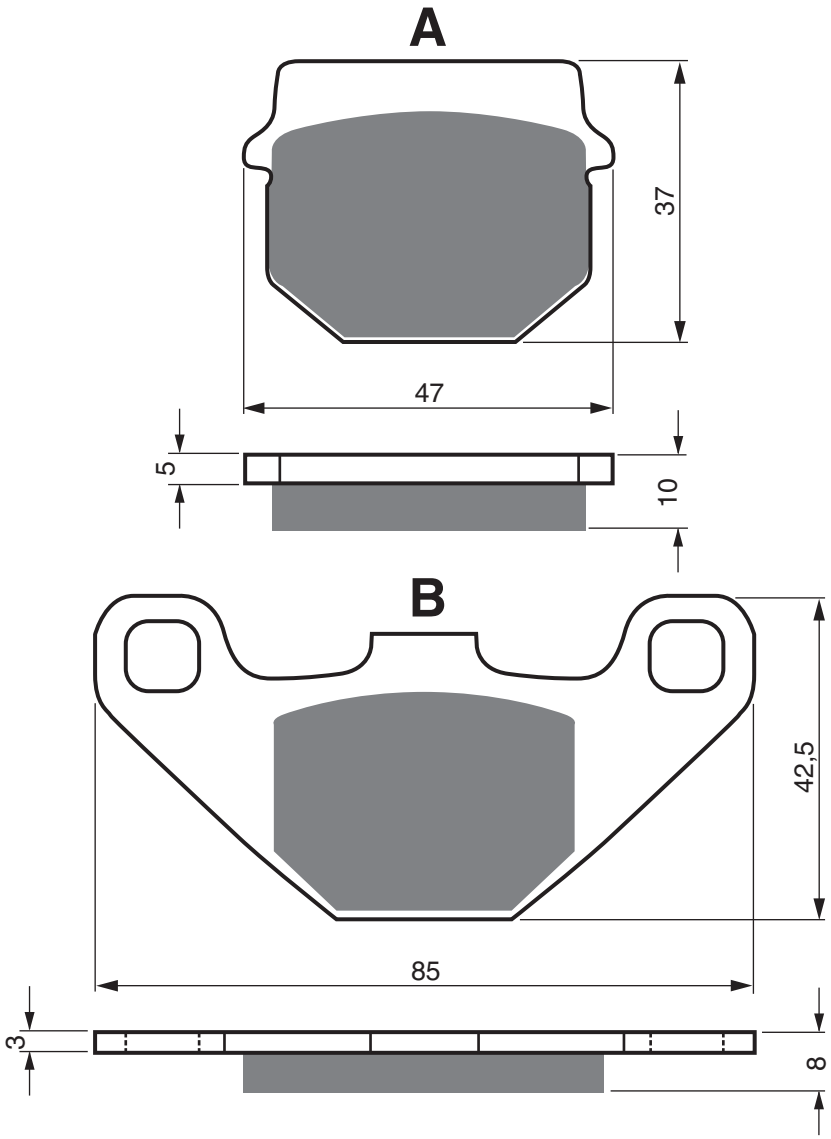

EASY RIDER

	50	Easy Rider	1999 - 1999	FL

GILERA

	50	Stalker	2003 - 2011	FL

GOES

G	90	XS	2010 - 2013	RR
G	225	S	2012 - 2013	FL

HONDA

MB	80	(MB8) (HC01/C029)	1980 - 1980	FL
MCX	80	(HC05/C940)	1982 - 1982	FL

KAWASAKI

KSR1	50	(KMX50 B1/B2)	1990 - 1991	FL
KSR II	80	(KMX 80 B1/B2)	1990 - 1991	FL

KEEWAY

	25	/50 Matrix	2006 - 2006	FL

KREIDLER

	50	Florett	1999 - 2011	FL

PEUGEOT

	50	Buxy (Hengtong cal.)	1994 - 1994	FL

PIAGGIO VESPA

NRG	50	Power DD	2006 - 2018	FL
NRG	50	Power DT	2005 - 2015	FL
NRG	50	Pure Jet	2006 - 2009	FL
NRG	50	Silver Bullet	2010 - 2010	FL

SCARABEO

	50	(4T/4V)	2010 - 2015	FL
	50	Net (4T/4V)	2010 - 2011	FL
	50	Street (2T)	2010 - 2015	FL
	100	(4T)	2010 - 2014	FL

SIAM

	50	Mat	1997 - 1997	FL
	100	Mat	1997 - 1997	FL

SMC

	50	Easy Rider	1997 - 1997	FL

STOMP MINI MOTO

KZ	140	F		FL
KZR	140	F		FL
Z	140	F		FL

SUZUKI

AN	125	HKK5	2006 - 2008	FL

EQUIVALENTS OEM

497417	647171	59300 37810	59302 20820

AD	K1	K5	S3

PART NUMBER

043

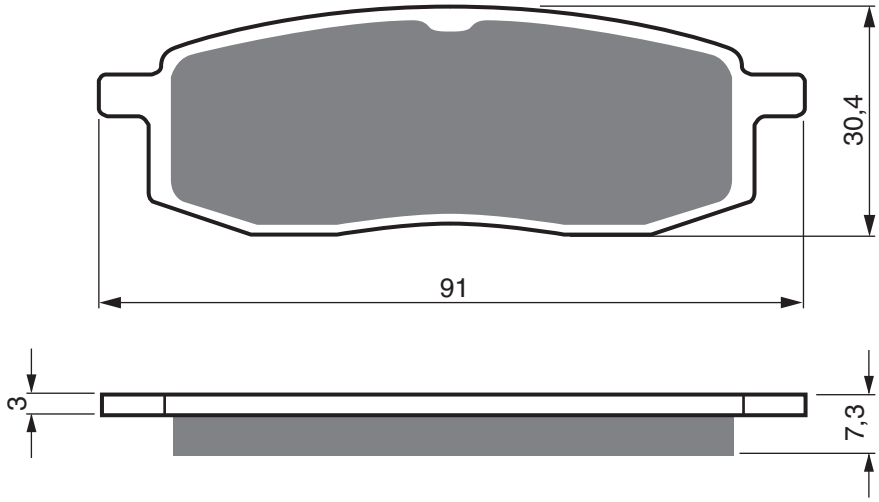

YAMAHA

YZ	125	N/S/T	1985 - 1988	FL
YZ	125	U	1988 - 1988	FL
TT	250		1990 - 1990	FL
YZ	250	N/S/T	1985 - 1987	FL
YZ	250	U	1988 - 1988	FL
TT	350	(ITJ)	1985 - 1989	FL
TT	350	A (3GJ)	1990 - 1995	FL
YZ	490	N/S/T/U	1985 - 1988	FL
YZ	490	U, W, A	1988 - 1990	FL
TT	600	W (2JT/3SW1) (Frame # 59X007853-)	1989 - 1992	FL

EQUIVALENTS OEM

56A W0046 00	1LN W0045 01	1LX W0045 00	2HH W0045 00	2HH W0045 01

PART NUMBER

044

AD | S3

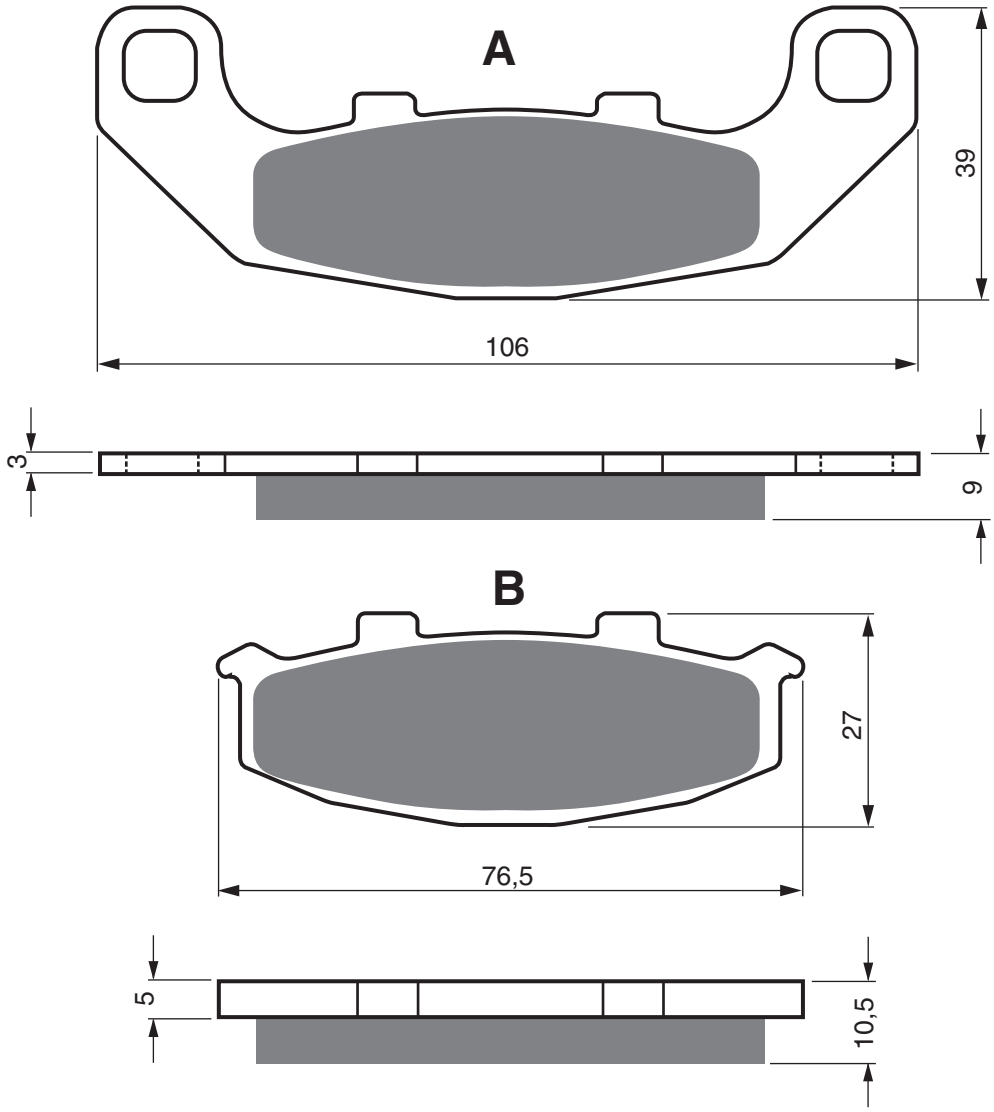

KAWASAKI

GPX	250	R (EX 250 F)	1987 - 1987	RR		
GPX	250	R (ZX 250 F2-F9)	1988 - 1995	RR		
GPX	250	RII (EX 250G)	1988 - 1988	FL	FR	RR
KR-1	250	(KR 250 B2)	1989 - 1989	FL	FR	RR
KR-1S	250	(KR 250 C2/C3)	1990 - 1992	RR		
ZXR	250	(ZX 250 A1/A2)	1989 - 1990	FL	RR	
ZXR	250	C1-C3 (ZX250 C1-C3)	1991 - 1995	FL	FR	
ZXR	250	R (ZX 250 B1/B2)	1989 - 1990	FL	FR	RR
ZXR	250	R (ZX 250 D1)	1991 - 1991	FL	FR	
GPX	400	R (ZX 400 F1)	1987 - 1987	FL	FR	
GPZ	400	R D4	1988 - 1988	FL	FR	
ZR	400	D1/D3/D4 Zanthus	1992 - 1995	FL	FR	
ZX-4	400	(ZX 400 G1/G1A/G1B)	1988 - 1988	FL	FR	RR
GPZ	500	S (EX500 E1-E10)	1994 - 2004	FL	FR	
ZR	550	B2/B3 Zephyr	1991 - 1993	RR		

SUZUKI

RGV	250	M/N/P/R/S	1991 - 1995	RR	
RGV	250	T (RGVR 250SP VJ 23A)	1996 - 1996	RR	

EQUIVALENTS OEM

43082 1075	43082 1076	43082 1085	43082 1087	43082 1101	43082 1125	43082 1127
43082 1144	43082 1147	43082 1162	69100 22820	69100 22830	69100 22850	43082 0151

AD | S3

PART NUMBER

045

6 mm Pin Holes

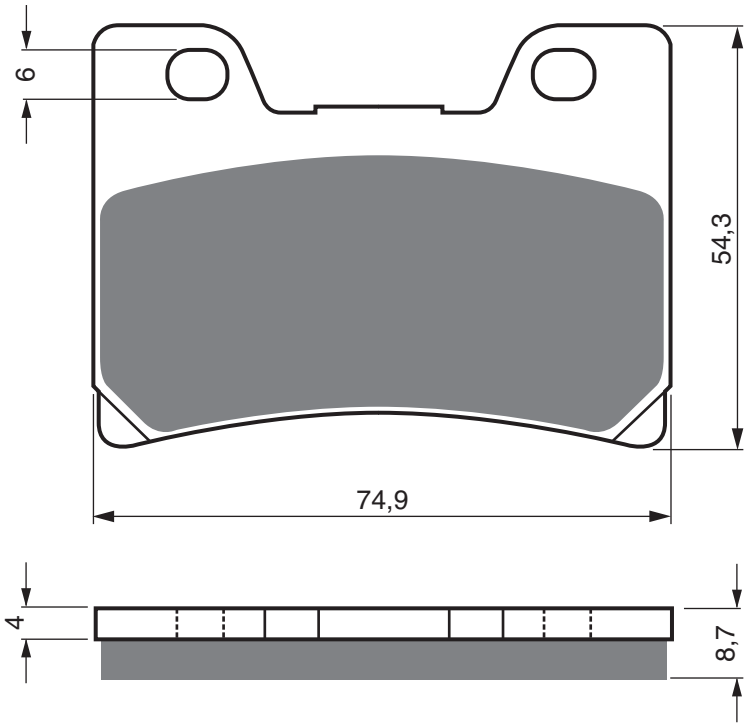

YAMAHA

FZR	1 000	EX UP (USD Forks)	1991 - 1993	FL	FR

EQUIVALENTS OEM

3GM W0045 50

PART NUMBER

046

AD | S3

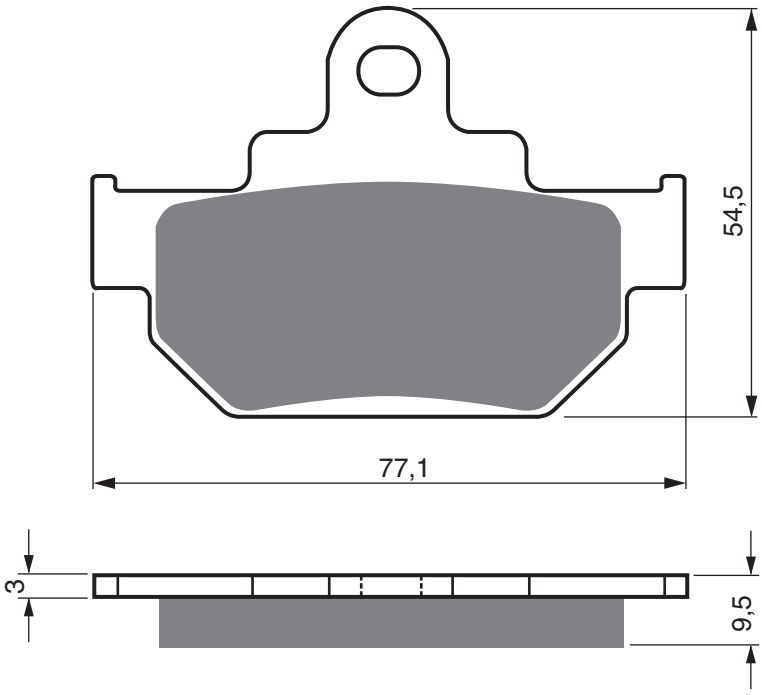

SUZUKI

DR	600	RG/RH/RJ (SN41A) (Rear Drum Model)	1986 - 1988	FL
DR	600	RK (SN41A) (Rear disc model)	1989 - 1989	FL
DR	600	SF/SG/SH/SJ/SK (SN41A)	1985 - 1989	FL

EQUIVALENTS OEM

5930014830	5934014500	5934014501	5934014510

AD	K1	K5	S3

PART NUMBER

047

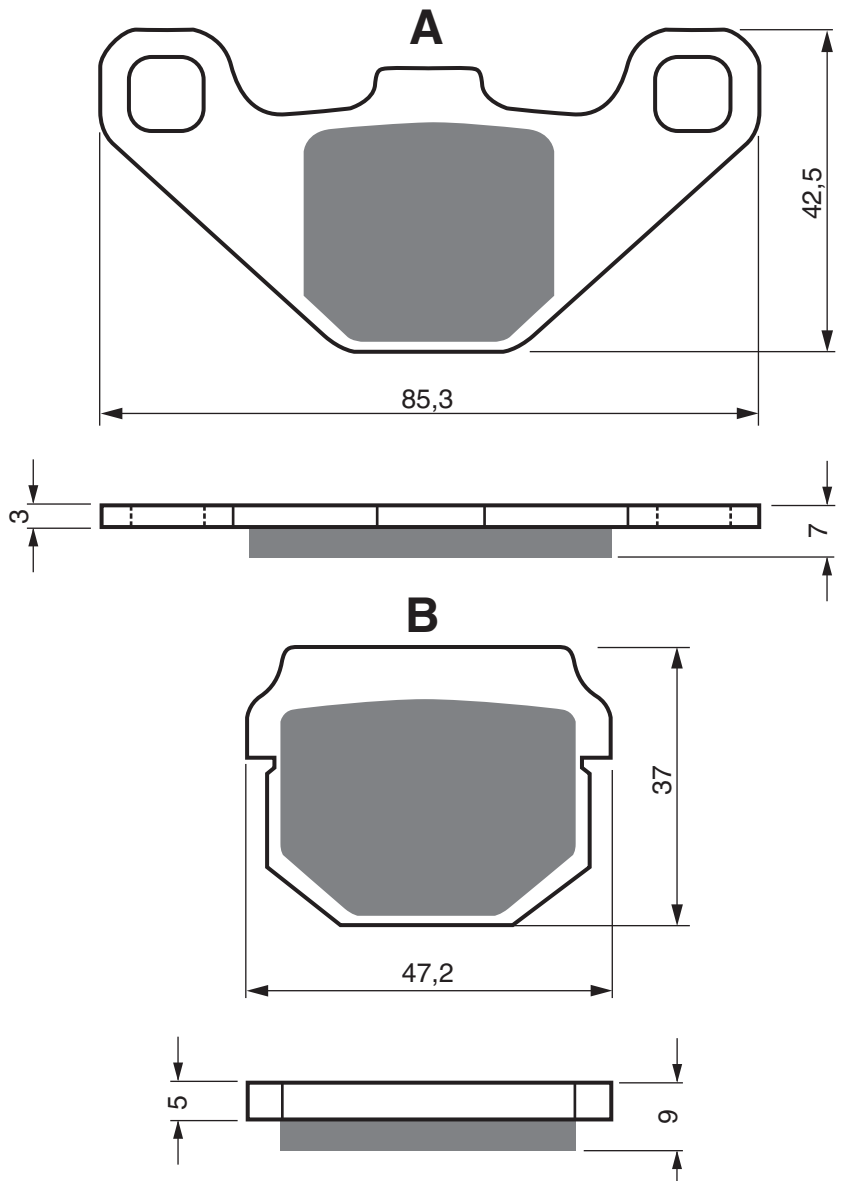

ADLY

	50	Cosy	2002 - 2006	FL		
	50	Jet	1996 - 1996	FL		
	50	Predator	2002 - 2006	FL	FR	
AT	50	Air Tech 1	2008 - 2009	FL		
NB	50	Noble	2008 - 2010	FL		
P50	50	Panther	2002 - 2009	FL		
RS	50	Supersonic	2006 - 2008	FL	FR	RR
RT	50			FL		
SF	50	Silver Fox	2006 - 2009	FL		
SS	50	1/11 Supersonic	2004 - 2005	FL		
TB	50	Thunderbike	2008 - 2010	FL		
	80	Cosy	2002 - 2006	FL		
	100	Jet	1996 - 1999	FL		
	100	Panther	2002 - 2009	FL		
	100	Predator	2002 - 2006	FL	FR	
RT	100			FL		
SS	100	1/11 Supersonic	2004 - 2005	FL		
GK	125	Buggie	2003 - 2007	RR		
NB	125	Noble B (Rear drum model)	2008 - 2010	FL		
NB	125	Noble D (Rear Disc Model)	2008 - 2009	FL	RR	
SS	125	B/D Supersonic	2004 - 2005	FL	RR	
TB	125	Thunderbike (Rear Disc Model)	2001 - 2001	FL	RR	
TB	125	Thunderbike (Rear Drum Model)	2001 - 2001	FL		
	150	Crossroad Quad	2007 - 2009	FL	FR	RR
	150	Crusader Quad	2006 - 2006	FL	FR	RR
	150	Interceptor	2006 - 2006	FL	FR	RR
	150	Sport Quad	2008 - 2009	FL	FR	RR
	300	Crusader Quad	2005 - 2007	FL	FR	RR
	300	Interceptor	2005 - 2007	FL	FR	RR

PART NUMBER

047

AD | K1 | K5 | S3

AEON

	50	Aero (Scooter)	2006 - 2006	FL		
	50	Cobra	2006 - 2015	RR		
	50	Nox (Scooter)	2006 - 2006	FL		
	50	Regal (Scooter)	2006 - 2006	FL		
	50	Revo R Cobra 2 (AT34 Type) (Quad)	2004 - 2006	RR		
	60	Cobra (AT30 Type) (Quad)	2004 - 2011	RR		
	90	Regal (Scooter)	2006 - 2006	FL		
	100	Aero (Scooter)	2006 - 2006	FL		
	100	Nox (Scooter)	2006 - 2006	FL		
	100	Pulsar (Scooter)	2006 - 2006	FL		
	100	Revo R Cobra 2 (AT34 Type) (Quad)	2004 - 2011	RR		
	125	Nox (Scooter)	2006 - 2006	FL		
	125	Pulsar (Scooter)	2006 - 2006	FL		
	125	Sporty (AT05 Type) (Quad)	2001 - 2005	RR		
	125	Urban (Scooter)	2011 - 2011	RR		
	150	Nox (Scooter)	2006 - 2006	FL		
	150	Pulsar (Scooter)	2006 - 2006	FL		
	180	Sporty (AT05 Type) (Quad)	2004 - 2005	RR		
	200	Elite i (Scooter)	2011 - 2011	RR		
	200	Two Hundred (Quad)	2005 - 2005	FL	FR	RR
	220	Cobra (Quad)	2006 - 2011	FL	FR	
	300	Cobra S	2012 - 2015	FL	FR	
	300	Cube (Side x Side)	2011 - 2011	FL	FR	
	300	Overland (AT20) (Quad)	2006 - 2007	FL	FR	
	350	Cobra (Quad)	2010 - 2011	FL	FR	
	350	Crossland RX	2011 - 2011	FL	FR	
	350	Urban i (Scooter)	2011 - 2011	RR		
	400	Cobra (Quad)	2010 - 2015	FL	FR	
	400	Crossland (2x4)	2012 - 2015	FL	FR	PB
	400	Crossland (4x4)	2012 - 2015	FL	FR	PB
	400	Cobra Supermoto (Quad)	2013 - 2015	FL	FR	
	600	Crosslander i	2014 - 2015	FL	FR	PB

ALFER

VR	125	Raider	2012 - 2013	RR		
VX	125	Explorer	2012 - 2013	RR		
VX	200	Explorer	2012 - 2013	RR		

APACHE

RLX	50			RR		
RLX	100			RR		
RLX	110			RR		

APRILIA

RS4	50	(4T) (J.Juan Calipers)	2011 - 2020	RR		
SX	50	Factory	2019 - 2020	RR		
SX	50	Limited Edition	2014 - 2016	RR		
	125	Tuono (ABS)	2017 - 2020	RR		
RS	125	(4T)	2017 - 2018	RR		
RS	125	GP Replica (4T)	2018 - 2020	RR		
RS4	125	(4T) (J.Juan Calipers)	2011 - 2020	RR		
RX	125		2018 - 2020	RR		
SX	125		2018 - 2020	RR		

BENELLI

	350	Zenzero	2012 - 2016	RR		

BLANEY (QUADS)

XC	125	Trojan	2003 - 2004	RR		

BOMBARDIER

	200	Rally	2003 - 2004	FL	FR	
	200	Rally	2005 - 2006	FL	FR	

BSM

TB	100			FL		
TB	125			FL	RR	

CAN-AM

DS	90	X (4T)	2008 - 2015	FL	FR	RR
	200	Rally (4A7A/B/C/D/E/F)	2007 - 2007	FL	FR	

CCM

LX	350	-4A Quad	2008 - 2009	RR		

CF MOTO

CF	800	3 (Tracker 800 Side x Side)	2013 - 2013	RR		

CPI

		Quad (Crab)	2003 - 2004	RR		
	50	Baby J	2002 - 2002	FL		
	50	Hussar	2001 - 2002	FL		
	50	Mars	2001 - 2001	FL		
	50	Popcorn	2002 - 2002	FL		
	100	Quad (Crab)	2003 - 2004	RR		
ST	250	Sector quad	2005 - 2006	FL	FR	

CQR

DN	50		2005 - 2005	RR		
DN	50	E	2005 - 2005	RR		
DN	100		2005 - 2006	RR		
DN	100	E	2005 - 2005	RR		
DN	150			RR		
DN	150		2005 - 2005	RR		
DN	150	E	2005 - 2005	RR		
DN	150	Extreme		RR		
	250	Utility	2006 - 2006	FL	FR	RR
DN	250		2005 - 2005	RR		
DN	250	/Hammel	2006 - 2006	FL	FR	RR
DN	250	Dolphin	2006 - 2006	RR		
RX	260		2006 - 2006	FL	FR	RR

DAELIM

ET	250	Quad	2005 - 2008	FL	FR	
ST	250	Sector Quad	2005 - 2006	FL	FR	
ET	300	Quad	2007 - 2009	FL	FR	

DERBI

DRD	50	Senda Racing SM (Cast wheel/260mm F/Disc)	2011 - 2012	RR		
DRD	50	Senda X-Treme R (21"spoke wheel/260mm/front disc)	2011 - 2014	FL	RR	
DRD	50	Senda Racing R (Spoke wheel/260 mm F disc)	2011 - 2012	RR		
DRD	50	Senda X-Treme SM (Cast Wheel/260mm F disc/17" Front wheel)	2011 - 2014	RR		
DXR	200	Quad (Front Disc Model)	2004 - 2007	FL	FR	
DXR	250	Quad (From Disc Model)	2004 - 2007	FL	FR	

E-TON

BXL	50	Draco	2005 - 2006	RR		
EXL	50	Viper 50	2007 - 2007	RR		
RXL	50	Viper	2003 - 2006	RR		
RXL	50	Viper Mini 50 M	2003 - 2007	RR		
RLX	70	Viper	2005 - 2007	RR		
RXL	90	R Viper 90R Reverse	2003 - 2007	RR		
RXL	90	Viper 90	2003 - 2007	RR		
BXL	100	Draco	2005 - 2006	RR		
EXL	150	Viper ST Quad	2005 - 2007	FL	FR	
EXL	150	Yukon S.T (Rear Drum)	2005 - 2007	FL	FR	
VXL	250	ST Vector	2006 - 2007	FL	FR	
VXL	250	Vector	2006 - 2007	FL	FR	
VTX	300	ST Vortex ST	2007 - 2007	FL	FR	
VTX	300	Vortex	2007 - 2007	FL	FR	
VXL	300	ST Vector ST	2007 - 2007	FL	FR	
VXL	300	Vector	2007 - 2007	FL	FR	

EVA

		Electric scooter	2013 - 2014	FL	RR	

AD	K1	K5	S3

PART NUMBER

047

GENERIC

	50	Demonio	2017 - 2018	RR	
	50	Epico (2T)	2010 - 2016	FL	
	50	Jump (2T)	2012 - 2018	FL	
	125	Demonio	2017 - 2018	RR	
	125	Sirion (Rear Disc Model) (4T)	2018 - 2020	RR	
	125	Race 2 GT (4T)	2018 - 2018	RR	

GOES

G	90	XS	2010 - 2013	RR	
G	350	S (Quad)	2008 - 2014	FL	FR

GOVECS (ELECTRIC SCOOTERS)

GO		S 1-2	2011 - 2014	RR	
GO		S 1-4	2011 - 2014	RR	
GO		S 2-4	2011 - 2014	RR	
GO		S 3-4	2011 - 2014	RR	
GO		T 1-2	2011 - 2014	RR	
GO		T 1-4	2013 - 2014	RR	
GO		T 2-4	2011 - 2014	RR	
GO		T 3-4	2011 - 2014	RR	

HYOSUNG

		Eva Electric Scooter (ST-E3)	2013 - 2014	FL	RR
		Krillo Master	2004 - 2004	FL	
ST		E3 (Electric Scooter)	2010 - 2011	FL	
	50	Avanti	1999 - 2006	FL	
	50	Prima	1999 - 2006	FL	
	50	Rush	1997 - 1997	FL	
	50	Sense	1998 - 2006	FL	
	50	Super Cab	1995 - 2006	FL	
	50	Super Cab Plus	1998 - 2006	FL	
SB	50		2000 - 2000	FL	
SB	50	P	2000 - 2000	FL	
SD	50		2000 - 2006	FL	
SF	50	R Rally Prima	2000 - 2006	FL	
	100	Cab	1998 - 1998	FL	
EZ	100		1999 - 2002	FL	
SF	100	R	2005 - 2006	FL	
FX	110	DLX Midas Plus	1999 - 2004	FL	
KR	110	Master	2004 - 2004	FL	
GD	125	EXIV	2012 - 2012	RR	
XRX	125	LC Enduro	2014 - 2015	RR	
XRX	125	LC Supermoto	2014 - 2015	RR	

KAWASAKI

AR	50	A1/C2-C10	1981 - 1997	FL	
AR	80	A1/C1-C8	1981 - 1991	FL	
KX	80	E2/E3/G1/G2/J1/J2	1984 - 1987	FL	
KX	80	L1-L3/N2/N3/R1-R6/T1-T6	1988 - 1996	FL	
KX	100	A1/A2/B1/B2/B3	1988 - 1994	FL	
KX	100	B5-B6	1995 - 1996	FL	
KDX	125	A1/A2/B1/B2	1990 - 1994	FL	
KMX	125	A1-A5/B1-B9	1986 - 1998	FL	
KX	125	B1	1982 - 1982	FL	
KMX	200	A2/A3	1988 - 1992	FL	
KX	250	B1	1982 - 1982	FL	
KXF	250	A1/A2 Tecate 4	1987 - 1988	RR	

KEEWAY

	50	F-Act Cty (2T)	2009 - 2015	RR	
	50	Flash	2007 - 2010	FL	
	50	Hurricane	2007 - 2014	FL	
	50	Hurricane Base	2007 - 2007	FL	
	50	Pixel	2008 - 2012	FL	
	125	Focus	2006 - 2007	FL	
	250	Dragon Quad	2007 - 2009	FL	FR
	350	i Index	2013 - 2014	RR	

KREIDLER

		e-Florett 1.00 (3.0kW)	2014 - 2015	RR	
		e-Florett 3.00 (4.0kW)	2014 - 2015	RR	

MAICO

	50	Booster Track	1997 - 1997	FL	
	50	Cruiser	1999 - 1999	FL	
	50	Thunderbike II	1999 - 1999	FL	
C-1	50	Hard Enduro	1999 - 1999	FL	
R-1	50	Superbike	1999 - 1999	FL	
X-1	50	SuperCross	1999 - 1999	FL	

MALAGUTI

	50	Centro (4T)/SL	2008 - 2011	FL	
F10	50	WAP	2010 - 2011	FL	

MASAI

L	150		2005 - 2007	RR	
A	300	Quad	2005 - 2007	FL	FR
A	450	Quad	2005 - 2007	FL	FR

MOTO-ROMA

	50	/100 Grand Prix	1999 - 2003	FL	
	50	Grand Prix	1999 - 1999	FL	
	125	Grand Prix	2002 - 2002	FL	RR
	125	Lazer Buggie	2003 - 2007	RR	
	300	Geko Quad	2004 - 2006	FL	FR

MOTORHISPANIA

MH10	50	Eco Urban	2014 - 2014	RR	
MH10	50	Enduro	2013 - 2014	RR	
MH10	50	Pro Enduro	2013 - 2014	RR	
MH10	50	Pro SM	2013 - 2013	RR	
MH10	50	Pro Urban	2014 - 2014	RR	
MH10	50	SM	2013 - 2013	RR	
RYZ	50	Enduro	2013 - 2014	RR	
RYZ	50	Pro SM	2013 - 2013	RR	
RYZ	50	SM	2013 - 2013	RR	
	125	Duna	2013 - 2014	RR	
	125	Duna Pro	2013 - 2014	RR	
MH10	125	Enduro	2013 - 2014	RR	
MH10	125	SM	2013 - 2013	RR	

MZ

	50	/50 SX Moskito	2002 - 2002	FL	
	125	Moskito	2002 - 2002	FL	
VRS	150	Quad	2005 - 2005	RR	

PETERSON

	50	Hurricane	1995 -	RR	
SR	50	Racing	1995 -	RR	
	80	Hurricane	1995 -	RR	
SR	80	Racing	1995 -	RR	

PEUGEOT

		Various Scooter models (Check pad shape)		FL	
	50	Kisbee (2T/4T)	2010 - 2020	FL	
	50	Kisbee RS (2T/4T)	2010 - 2020	FL	
	50	Speedfight 1/2 (Heng Tong cal.)	1997 - 2008	FL	
	50	Speedfight LC Darkside (Heng Tong Caliper)	2013 - 2013	RR	
	50	Trekker (2T) Heng Tong Caliper	1998 - 2000	FL	
	50	Vivacity (12" Wheels / 190mm Disc) Heng Tong Caliper	1992 - 2007	FL	
	50	Vivacity 2 (10" Wheels / 190mm Disc) Heng Tong Caliper	2008 - 2011	FL	
	100	Kisbee (4T)	2012 - 2015	FL	
	125	Speedfight 4 (4T)	2017 - 2018	RR	

PART NUMBER

047

AD | K1 | K5 | S3

	400	Metropolis Allure (3 Wheel Model/Nissin Caliper)	2017 - 2018	PB	
	400	Metropolis Blue Line (3 Wheel Model)	2015 - 2016	PB	
	400	Metropolis RS (3 Wheel Model/Nissin Caliper)	2017 - 2018	PB	
	400	Metropolis RX-R (3 Wheel Model / Nisan Caliper)	2017 - 2018	PB	
	400	Metropolis T (3 Wheel Model)	2014 - 2016	PB	
	400	Metropolis T-RS (3 Wheel Model)	2014 - 2016	PB	
PGO					
XL		Rider	2007 - 2008	RR	
	50	Comet	1991 - 1991	FL	
	50	Galaxy	1993 - 2000	FL	
	50	Mega	1994 - 1994	FL	
	50	Road 66	1995 - 1995	FL	
	50	X-Rider	2003 - 2003	RR	
	90	Galaxy	1992 - 1992	FL	
	125	X-Rider	2003 - 2003	RR	
	150	50/90/110 Rider	2004 - 2005	RR	
	150	X-Rider	2003 - 2003	RR	
POLARIS					
	200	Phoenix (AC/AD Model and following/rear Drum model)	2006 - 2009	FL	FR
	200	Phoenix Quadricycle Model (EC/ED Models / Rear Disc Model)	2005 - 2009	FL	FR
	200	Sawtooth Quadricycle (Rear Disc Model)	2006 - 2006	FL	FR
	200	Sawtooth Quadricycle (Rear Disc Model)	2008 - 2008	FL	FR
	200	Sawtooth (Rear Drum Model)	2006 - 2008	FL	FR
QUADRO					
	350	4	2014 - 2015	RR	PB
	350	D	2011 - 2015	RR	PB
	350	S	2013 - 2015	RR	PB
QUADZILLA					
		Magmax		RR	
		Pro Shark (Double 4 Arms)		RR	
		Pro Shark-E	2006 - 2006	RR	
X	50			RR	
ZR	50		2007 - 2009	RR	
	100	Black Max M (SE)	2006 - 2006	RR	
	100	Pro Shark (Single 4 Arms)		RR	
	100	Pro Shark RMX (Front Disc Models)	2007 - 2007	RR	
M	100	Blackmax (SE)	2006 - 2006	RR	
R	100	(Rear Disc Model)	2006 - 2009	RR	
X	100	E (XLC)	2006 - 2007	RR	
	200	4 Cross E SUV	2006 - 2007	FL	FR
ST	200	E (5 Speed Manual)	2006 - 2007	FL	FR
	250	Stinger R E	2006 - 2006	FL	FR
	300	E XLC	2006 - 2007	FL	FR
RIEJU					
MIUS		Eletric	2012 - 2015	FL	RR
	50	Urban Blast	2013 - 2015	FL	
RS	50	NKD (Scooter)	2013 - 2020	FL	
RS	50	Sport (Scooter)	2012 - 2020	FL	
RS3 NKD	50		2012 - 2020	RR	
RS3	125	(Sport)	2011 - 2020	RR	
RS3 NKD	125		2012 - 2020	RR	
ROXON					
NFS	150	Sport Spirit (Quad)	2004 - 2006	RR	
RX	150	(Quad)	2004 - 2006	RR	
SCARABEO					
	50	Yourz (4T)	2012 - 2014	FL	
SCORPA					
	125	T-Ride (2T)	2012 - 2015	FL	RR
	280	T-Ride (2T)	2012 - 2015	FL	RR
SHERCO					
	50	SE-R	2014 - 2015	FL	RR
	50	SM-R	2014 - 2015	FL	RR
SE-R	50	Factory	2019 - 2020	FL	RR
SE-RS	50	Factory	2019 - 2020	FL	RR
SM-R	50	Americas	2019 - 2020	FL	RR
SM-R	50	Factory	2019 - 2020	FL	RR
SM-RS	50	Americas	2019 - 2020	FL	RR
SM-RS	50	Factory	2019 - 2020	FL	RR
	125	X-Ride	2012 - 2020	FL	RR
	290	X-Ride	2012 - 2020	FL	RR
SULA					
	50	Thunder Bird	1999 - 1999	FL	FR
	100	Thunder Bird	1999 - 1999	FL	FR
	125	Thunder Bird	1999 - 1999	FL	FR
SUZUKI					
AD	50	T/Tune/V-Tune	1988 - 1988	FL	
AE	50	R	1988 - 1988	FL	
AJ	50	ZZ/RS Sepia	1992 - 1992	FL	
CP	50	C		FL	
CR	50	DC		FL	
RM	80	XG/XH/XJ/XK	1986 - 1989	FL	
RM	80	XL/XM/XN/XP/XR/XS	1990 - 1995	FL	RR
RM	80	T/V/W/X/Y/K1	1996 - 2001	RR	
RM	85	K2/LK2/K3/LK3/K4/LK4	2002 - 2004	RR	
AH	100	P Address	1995 - 1996	FL	
UE	125	CTK1	2001 - 2003	FL	
UE	150	CTK1	2001 - 2001	FL	
TGB					
	50	/90 Hornet Quad	2004 - 2005	RR	
	50	Bullet 2 (2T)	2011 - 2012	FL	
	50	Bullet RR	2011 - 2012	FL	RR
	50	Bullet RS (2T)	2011 - 2012	FL	RR
	50	City (2T)	2007 - 2008	RR	
	50	City (4T)	2007 - 2011	RR	
	50	High Wheel	2002 - 2003	FL	
	50	Tapo RR (2T)	2010 - 2012	FL	
	50	Tapo RS (2T)	2010 - 2012	FL	
	50	Trigger	2002 - 2003	FL	
	50	Delivery(From FE no 609100)	2006 - 2012	FL	
202	50	cc Classic	2003 - 2014	FL	
303	50	/125cc Revolution	2002 - 2003	FL	
303 R	50	Hawk/Laser	2004 - 2014	FL	
F409	50	Cruise	2002 - 2005	FL	
R	50	X Bullet	2006 - 2009	RR	
R	50	X Bullet	2010 - 2014	RR	
X	50	Race (2T)	2011 - 2012	FL	
204	125	cc Classic	2003 - 2004	FL	
F409	125	cc Cruise	2002 - 2005	FL	
R	125	X Bullet	2008 - 2009	RR	
R	125	X Bullet	2010 - 2014	RR	
	250	Blade/Congo ATV	2006 - 2007	RR	
	325	Blade LE Quad (4x2)	2008 - 2010	FL	FR
	325	Blade SL Quad (4x2)	2011 - 2012	FL	FR
	325	Quad Blade (4x2)	2007 - 2011	FL	FR
	325	Target (4x2)	2009 - 2011	FL	FR
	400	Target (4x2)	2009 - 2010	FL	FR
	425	Target (4x4)	2009 - 2011	FL	FR
	460	Blade IRS Target	2012 - 2012	FL	FR
	460	Blade R Target	2012 - 2012	FL	FR
	500	Target (4x2)	2009 - 2010	FL	FR
	525	Target (4x4)	2009 - 2011	FL	FR

AD	K1	K5	S3

PART NUMBER

047

TM

	80	/85 Minicross/Junior	1996 - 2000	FL

UVM

	50	BeThere	1999 - 1999	FL
	50	Bingo	1999 - 1999	FL
	125	BeThere	1999 - 1999	FL
	125	Bingo	1999 - 1999	FL
	125	Paragon	1999 - 1999	FL

VECTRIX

VX-2			2012 - 2014	RR

VIALLI

RX	50	Sport	2006 - 2006	FL

YAMAHA

YFM	90	RY	2009 - 2009	RR	
YFM	300	B/D Grizzly	2012 - 2014	FL	FR

ZERO

DS		ZF6 (2 Pin Fixing F-Pad)	2010 - 2012	RR
DS		ZF9 (2 Pin Fixing F-Pad)	2010 - 2012	RR
MX		(2 Pin Fixing F Caliper)	2010 - 2012	RR
S		ZF6 (2 Pin Fixing F-Pad)	2010 - 2012	RR
X		(2 Pin Fixing F Caliper)	2010 - 2012	RR
XU		(2 Pin Fixing F Caliper)	2010 - 2012	RR

EQUIVALENTS OEM

43050 1040	43050 1043	43050 1044	43050 1048	43050 1051	43050 1126	43050 1169
43082 1065	43082 1079	43082 1081	43082 1083	43082 1115	43082 1164	4312016900B
45120 119 00	45815 NAF00	69100 02821	59100 02820	59100 02821	59100 02830	59300 09810
59300 09811	59300 03870	59330 46F00	59340 46F00	736502	752426	752818
GF5359902	705 600 285	45815RAM00/01	610113 497417	514069	67131 5EE0 0000	59300 03860
45110 B20T 000	610143	45110 JHFT 000	45120 168000	45120 169000	G71315EE00000	0453036
PE802452	ISC F5805 00	B044223	B044224	4084 43D F5906 00	PS2012 02001	QCA 0648860010
R800277	0454293	4084	PS 2012 02001			

PART NUMBER

048

AD | S3 | S33 RACING

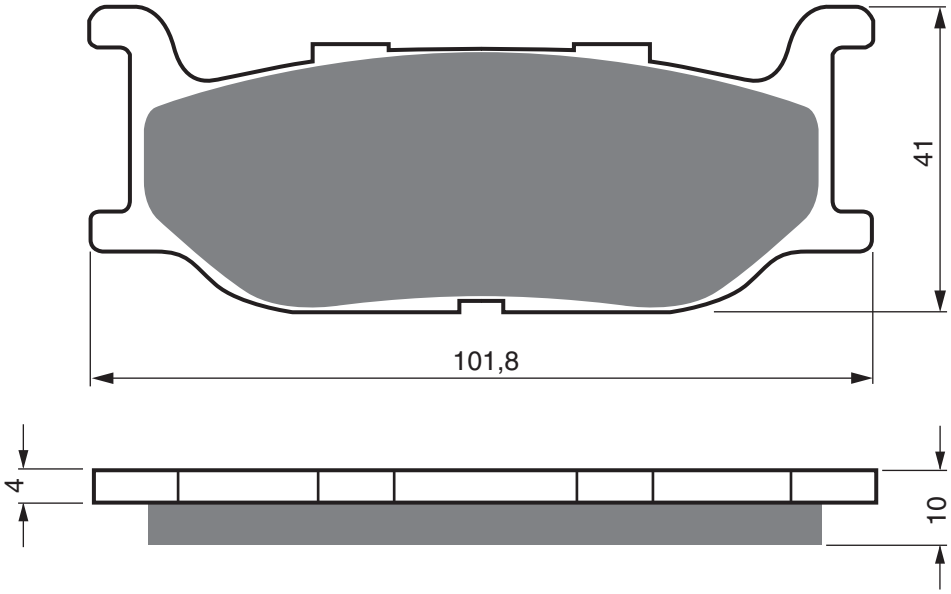

CF MOTO					
CF	250	T-5 V5 Custom	2011 - 2012	FL	
KYMCO					
AK	550		2017 - 2019	RR	
MOTOM					
	125	Transcity	2008 - 2009	FL	
	250	Transcity	2008 - 2009	FL	
SYM					
SB	125	N - Wolf (Carb Model/Drum Rear)	2011 - 2015	FL	
YAMAHA					
FZX	250	Zeal (3YX1/2/4)	1991 - 1992	FL	
SRV	250	"Soulfultwin/Renaissa" (4DN1-6)	1992 - 1997	FL	
SR	400	(2RD)	2014 - 2017	FL	
XP	400	Majesty	2004 - 2004	FL	
XVS	400		1996 - 1996	FL	
XP	500	N/P/R T-Max	2001 - 2003	FL	
XV	535	/535 S "Virago"	1995 - 2003	FL	
XJ	600	N	1995 - 1997	FL	
XJ	600	S "Diversion"	1992 - 1997	FL	
XVS	650	A Dragstar Classic	1998 - 2007	FL	
XVS	650	Drag Star	1997 - 2004	FL	
XV	750		1994 - 1997	FL	FR
XJ	900	S Diversion	1995 - 2003	FL	FR
SCR	950	(XVS 950XR-A)	2017 - 2018	FL	FR
XV	950	CU - XVS 950	2014 - 2016	FL	
XV	950	R-XVS 950 (2DE/Remote Reservoir Rear Shocks]	2014 - 2020	FL	
XV	950	Racer (Remote Reservoir Rear Shocks)	2015 - 2016	FL	
XVS	950	(Non ABS/Standard rear shocks)	2014 - 2014	FL	FR
XVS	950	A Midnight Star	2009 - 2013	FL	FR
XVS	950	ABS (1XC1) (Standard rear shocks)	2014 - 2015	FL	FR
XV	1 100	Virago	1994 - 1998	FL	FR
XVS	1 300	CU Custom	2014 - 2017	FL	FR
XVZ	1 300	Royal Star Venture S	2008 - 2011	FL	FR
XVZ	1 300	TF "Venture Star"	1999 - 2001	FL	FR
XV	1 600	A "Wildstar"	1999 - 2004	FL	FR

EQUIVALENTS OEM

3YX W0045 00	4BP W0045 00	4FU W0045 00	4KM W0045 00	4TR W0045 00	4WM W0045 00	5BN W0045 00
5RU W0045 10	5S7 10045 00	803.08.01.60	43108 HMA 000A	5S7 25805 00		

AD | S3 | S33 RACING

PART NUMBER

049

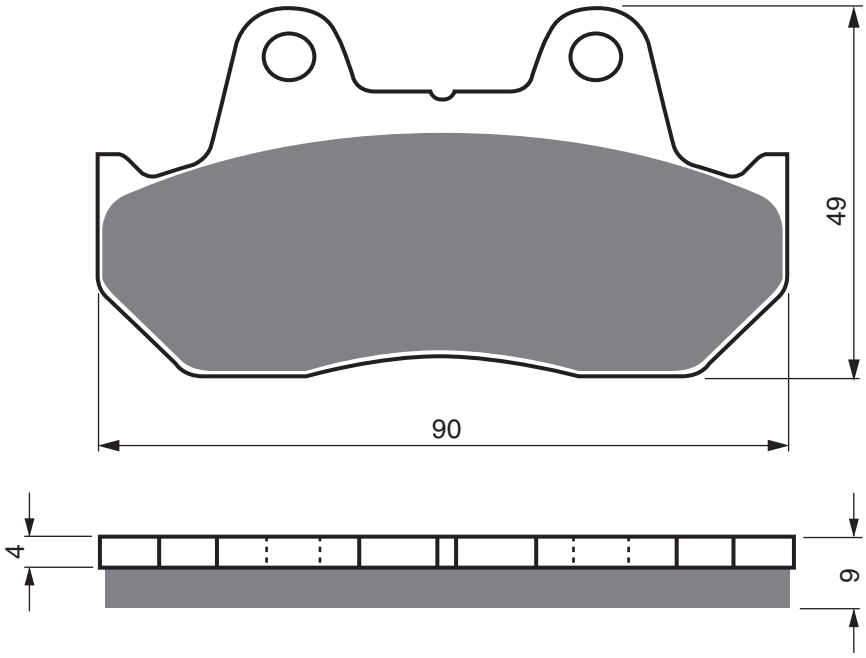

HONDA

CN	250	H/J/K/L/M/P/R/S/T/V/X SPAZIO/Helix	1987 - 1998	FL	
GB	250	E/H Clubman (MC10 101-110)	1984 - 1987	FL	
NS	250	FE/RE (MCII-100)	1984 - 1984	FL	FR
NS	250	RG (MCII-102)	1986 - 1986	FL	FR
CB	400	NC	1982 - 1982	FL	FR
CX	650	ED	1983 - 1983	FL	FR
CX	650	TD Turbo	1983 - 1983	FL	FR
GL	650	D2-E	1984 - 1984	FL	
CB	750	FC/F2C/FD/F2D	1983 - 1984	FL	FR
CB	900	FB/F2B	1982 - 1985	FL	FR
CBX	1 000	B/C	1981 - 1982	FL	FR
GL	1 100	AD Goldwing Aspencade	1983 - 1983	FL	FR
GL	1 100	C/DC Goldwing	1982 - 1982	FL	FR

XINGFU

XF	150	A	1997 - 1997	FL	

YAMAHA

GL	1 100	AC Aspencade "Goldwing"	1982 - 1982	FL	FR

EQUIVALENTS OEM

06455 443 405	06455 KN8 405	431A0 MC7 024	45105 KL8 405	43105 KN8 007	43105 MJ6 721/722/723	43105 MJ6 724
45105 443 761	45105 443 762	45105 KL8 004	45105 KL8 007	45105 KL8 014	45105 KL8 712	45105 KN8 007
45105 006/016/026	45105 KN8 712	45105 MC7 004	45105 MC7 007	45105 MC7 014	45105 MC7 024	45105 MM9 670
45105 MM9 781	45105 MM9 782					

PART NUMBER

050

AD | S3 | S33 RACING

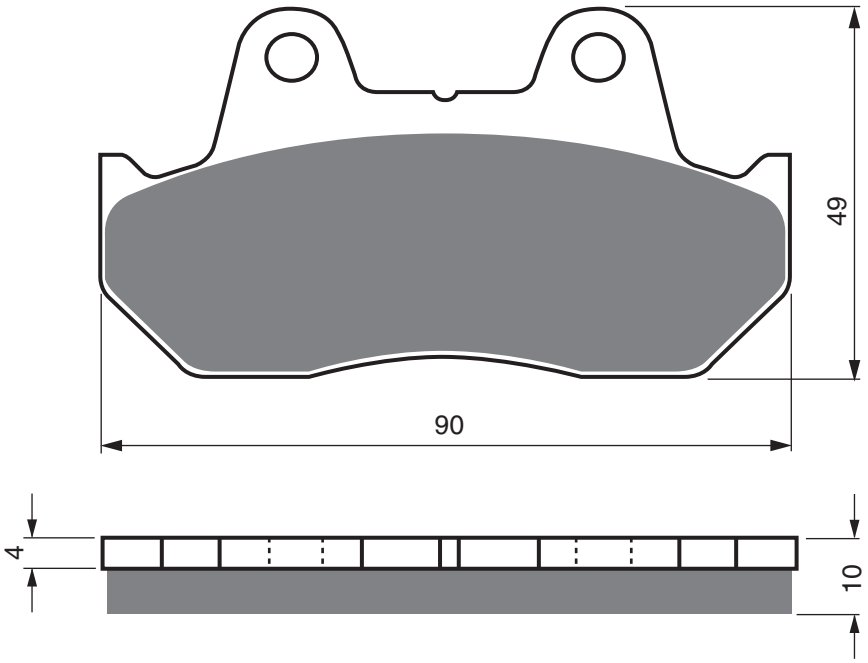

HONDA

CB	125	TDC/TDE/TDJ	1983 - 1989	FL		
CBX	125	F	1984 - 1984	FL		
CBX	250	RSE	1984 - 1984	FL		
NS	400	RF/RG	1985 - 1987	FL	FR	RR
CMX	450	CH/CJ Rebel	1987 - 1988	FL		
CX	500	CC	1982 - 1982	FL	FR	
CX	500	EC	1982 - 1982	FL	FR	RR
CX	500	TCC "Turbo"	1983 - 1983	FL	FR	RR
FT	500	C	1982 - 1982	FL	RR	
GL	500	DC	1982 - 1982	FL	FR	
VF	500	FE/F2E/FF/F2F	1984 - 1985	FL	FR	RR
XBR	500	F/G/H/SJ	1985 - 1989	FL		
XL	600	LMF/RMG/RMH	1985 - 1987	FL		
XL	600	VH/VJ/VK Trans Alp	1987 - 1990	FL		
CX	650	ED	1983 - 1983	RR		
CX	650	TD Turbo	1983 - 1983	RR		
CB	750	FC/F2C/FD/F2D	1983 - 1984	RR		
CBX	750	FE	1984 - 1984	FL	FR	
VF	750	C Shadow	1983 - 1983	FL		
VF	750	FD/FE	1983 - 1984	FL	FR	
VF	750	SC (V45 Sabre)	1982 - 1982	FL	FR	
XLV	750	R (RD/RF)	1983 - 1988	FL		
CB	900	FB/F2B	1982 - 1985	RR		
CB	900	FC/F2C/FD/F2D	1984 - 1985	FL	FR	RR
CBX	1 000	B/C	1981 - 1982	RR		
VF	1 000	FE/FF/FG/F2F/F2G	1984 - 1986	FL	FR	
VF	1 000	RE/RF/RG	1984 - 1986	FL	FR	
CB	1 100	RBII/RCII/RDII	1980 - 1983	FL	FR	RR
GL	1 100	AD Goldwing Aspencade	1983 - 1983	RR		
GL	1 100	C/DC Goldwing	1982 - 1982	RR		

EQUIVALENTS OEM

06435 MT8 405	06455 MA3 405	451A0 MM9 670	431A0 MC7 024	431A0 MC7 305	451A0 MM9 670	43105 KE7 702
43105 MA3 004	43105 MA3 007	43105 MC7 004/007/024	43105 MC7 014	43105 MJ6 004	43105 MJ6 007	43105 MJ6 014
45105 MA6 671	45105 MB0 007	45105 MB0 008	45105 MB1 701	45105 MB1 702	45105 MC4 004	45105 MF2 670
45105 MJ1 672	45105 MK4 004	45105 MK6 671	45105 MK7 671	45105 MK7 672		

AD | S3 | S33 RACING

PART NUMBER

051

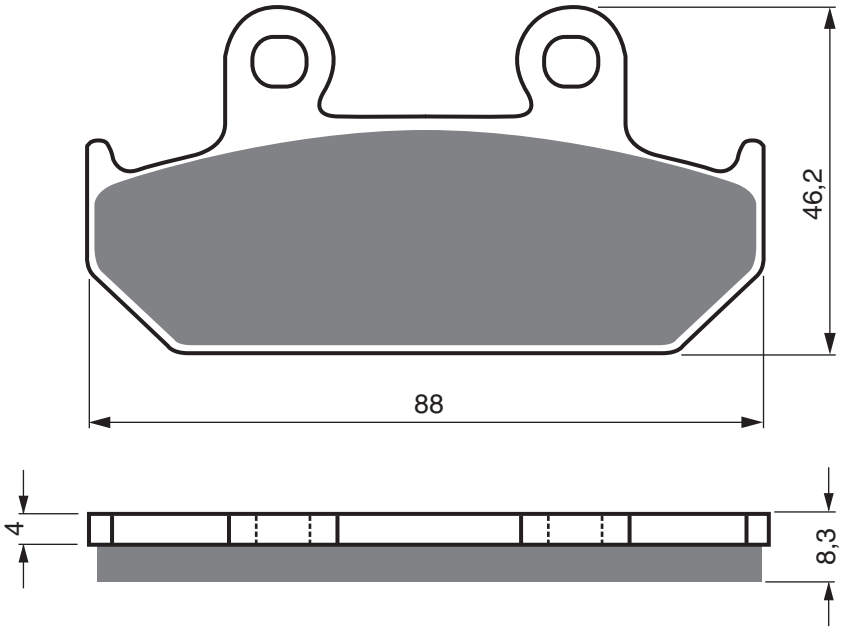

HONDA

RS	125	/250	1988 - 1989	FL		
CBR	750	FH Superaero (RC27)	1987 - 1987	FL	FR	
VFR	750	FG/FH	1986 - 1987	FL	FR	
CBR	1 000	FH/FJ	1987 - 1988	FL	FR	

EQUIVALENTS OEM

45105 ML7 006	45105 ML7 007	45105 MM5 007	45105 MM5 008	45105 NF4 000	451A0 ML7 670	45105 MM5 017
06455 MM5 P00						

PART NUMBER

052

AD | S3 | S33 RACING

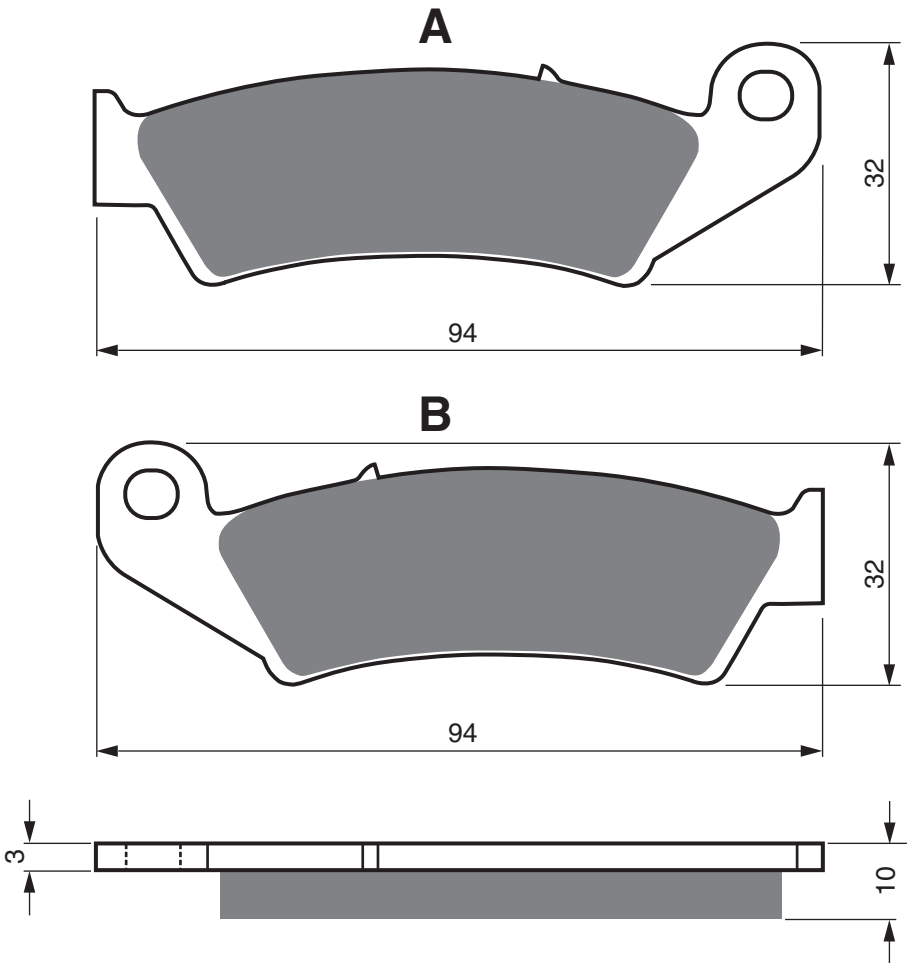

HONDA

NSR	250	R2R/R3R (MC28-110)	1994 - 1994	RR
NSR	250	R2T/R3T (MC28-120)	1994 - 1994	RR
NSR	250	RR (MC28-100)	1994 - 1994	RR
RVF	400	RR/RR-II/RT/RT-II (NC35)	1994 - 1996	RR
VFR	400	R3K/R3N/R3L/R3M (NC30)	1989 - 1992	RR
NR	750	N	1992 - 1992	RR
RVF	750	RR/RS (RC45)	1994 - 1998	RR
VFR	750	RJ/RK/RL (RC30)	1988 - 1990	RR

EQUIVALENTS OEM

06435 MR7 P00	43105 MR7 007A	43105 MR7 017A	43105 MT7 405	43106 MR7 007B	43106 MR7 017B

AD | S3 | S33 RACING

PART NUMBER

054

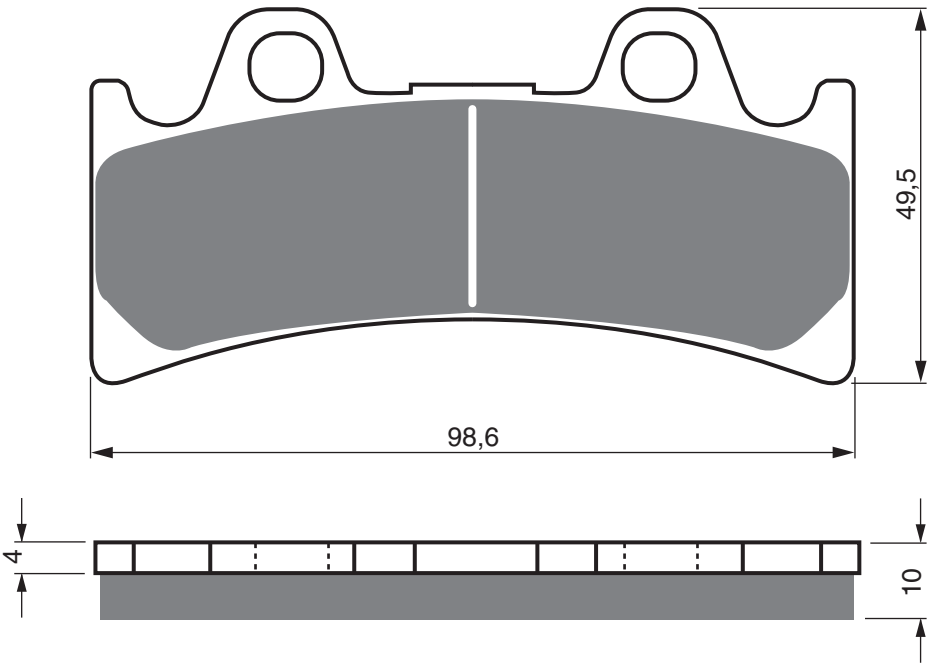

PERFORMANCE MACHINES

	112x6RSB		FL	
	112x6SSB		FL	

PRE TECH

	6 Piston caliper		FL	

TRIUMPH

900	Daytona Super III (3cyl)	1994 - 1997	FL	FR

YAMAHA

YZF	750	R/SP	1993 - 1997	FL	FR
FZR	1 000	EX UP (6 piston caliper)	1994 - 1995	FL	FR

EQUIVALENTS OEM

4FM W0045 00	4FM W0045 10	T2020211	T2020221	T2020218

PART NUMBER

055

AD	S3	S33 RACING

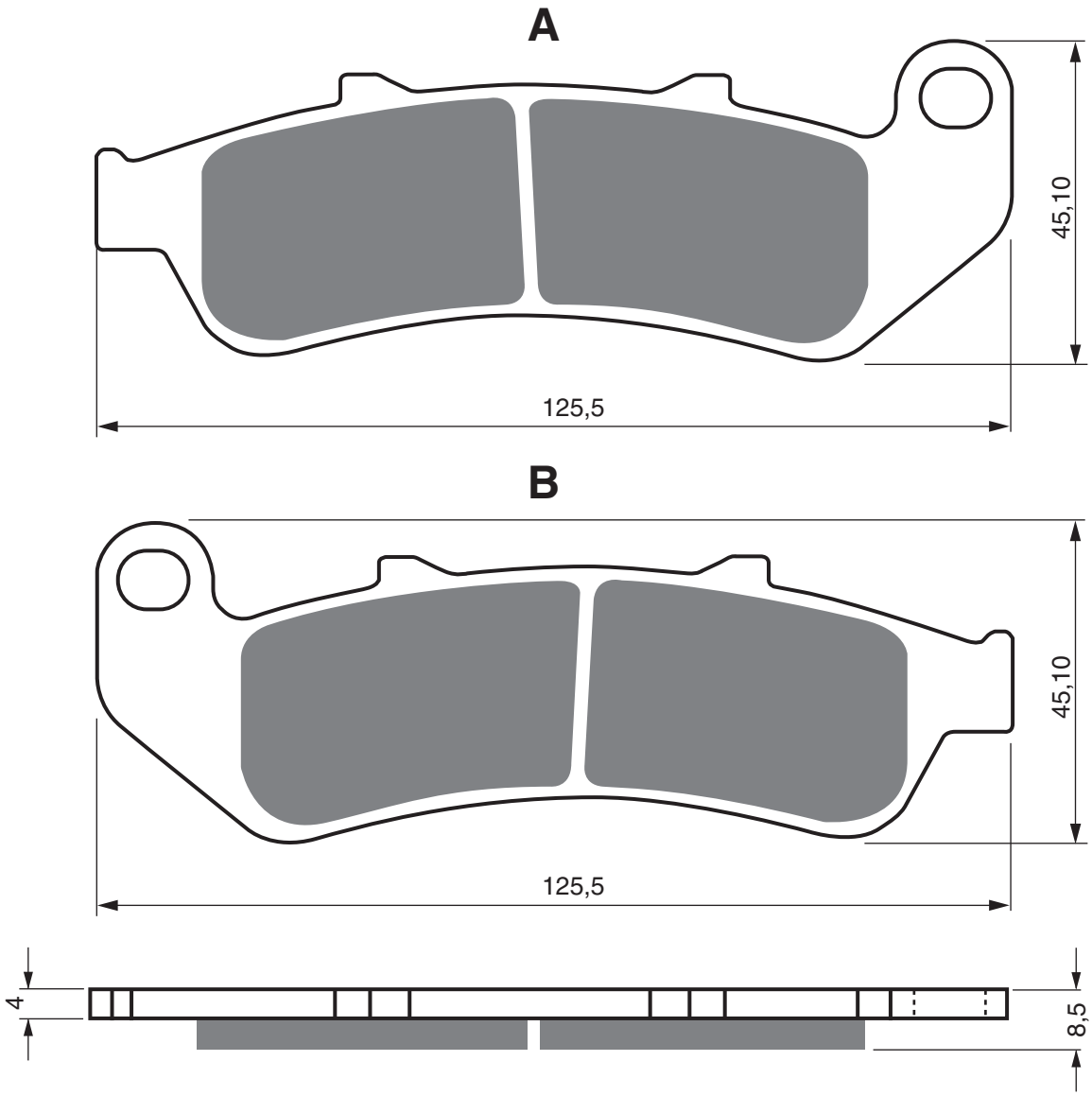

HONDA

CBR	1 000	FP/FR/FS/FT/FV/FW/FX	1993 - 1999	FL	FR	RR

EQUIVALENTS OEM

06455 MZ2 405	06455 MAJ G41	06435 MAJ G41	06435 MAT 006	06455 MZ2 405

AD | S3 | S33 RACING

PART NUMBER
056

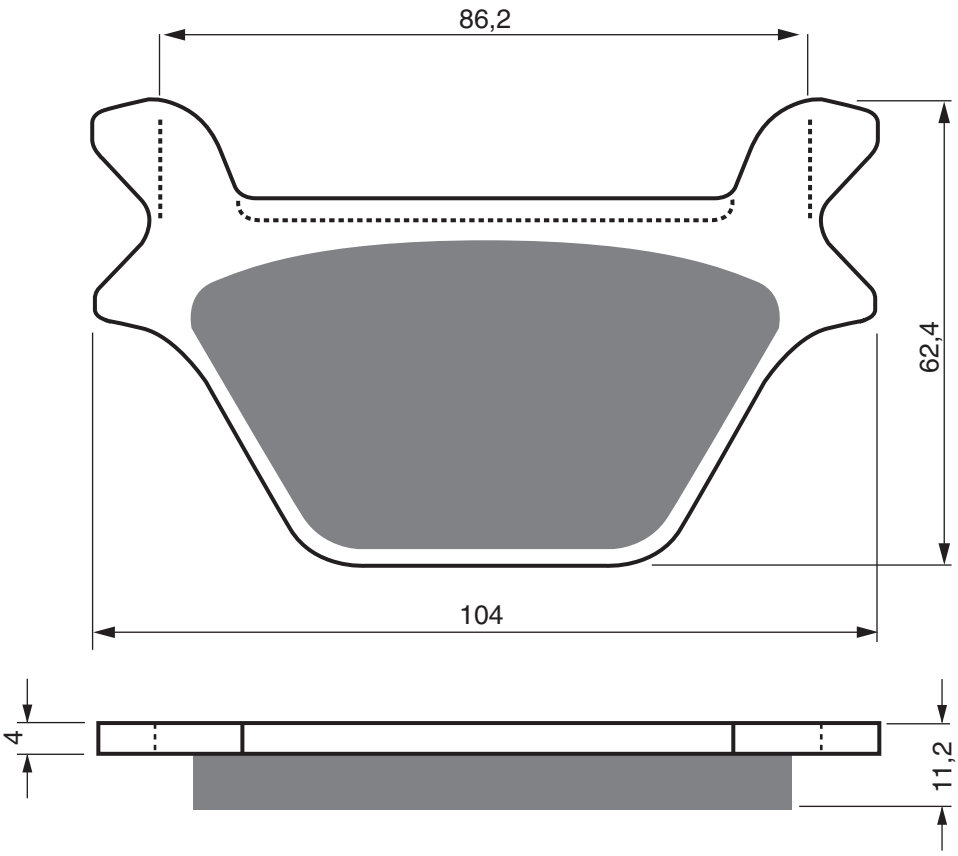

Abutment Shims
(2 per set)

HARLEY DAVIDSON

FXD			1987 - 1999	RR
FXRD			1987 - 1999	RR
XLCH			1987 - 1999	RR
XLS			1987 - 1999	RR
XLX			1987 - 1999	RR
XL	883	Sportster Custom	1988 - 1999	RR
XLH	883	Sportster (XL2/C560/1)	1987 - 1989	RR
XLH	883	Sportster (XL2/C560/1)	1990 - 1999	RR
XLH	1 100	(XL2/C560/1)	1987 - 1988	RR
XLH	1 200	Sportster (XL2/C560/1)	1990 - 1999	RR
FLST	1 340	Heritage Softail	1988 - 1999	RR
FLSTC	1 340	Heritage Softail Cl.	1990 - 1999	RR
FLSTF	1 340	Fat Boy	1990 - 1999	RR
FLSTN	1 340	Heritage Softail Nost.	1993 - 1999	RR
FLSTS	1 340	Heritage Softail Classic	1996 - 1996	RR
FXDL	1 340	Dyna Low Rider	1993 - 1999	RR
FXDWG	1 340	Dyna Wide Glide	1993 - 1999	RR
FXLR	1 340	Low Rider Custom	1993 - 1999	RR
FXLR	1 340	Low Rider Custom (FXR/C456/1)	1987 - 1988	RR
FXR	1 340	(FXR/C456/1)	1987 - 1988	RR
FXR	1 340	Super Glide (-/C456/1)	1990 - 1999	RR
FXR	1 340	Super Glide (FXR/C456/0)	1985 - 1986	RR
FXRS	1 340	Low Rider Sport (FXR/C456/1)	1987 - 1999	RR
FXRS	1 340	Low Rider Sport Ed. (-/C456/1)	1990 - 1999	RR
FXRS	1 340	Low Rider, Convert. (-/C456/1)	1990 - 1999	RR
FXRS	1 340	Super Glide	1988 - 1999	RR
FXRT	1 340	Super Glide (-/C456/1)	1990 - 1999	RR
FXST	1 340		1994 - 1994	RR
FXST	1 340	Bad Boy	1995 - 1995	RR
FXSTB	1 340		1987 - 1995	RR
FXSTC	1 340	Softail Custom (FXST/D312/0)	1988 - 1999	RR
FXSTS	1 340	Softail Springer	1996 - 1996	RR
FXSTS	1 340	Softail Springer (-/D312/0)	1990 - 1991	RR

EQUIVALENTS OEM

44209 87B	44209 87C	44213 87

PART NUMBER

057

AD | S3 | S33 RACING

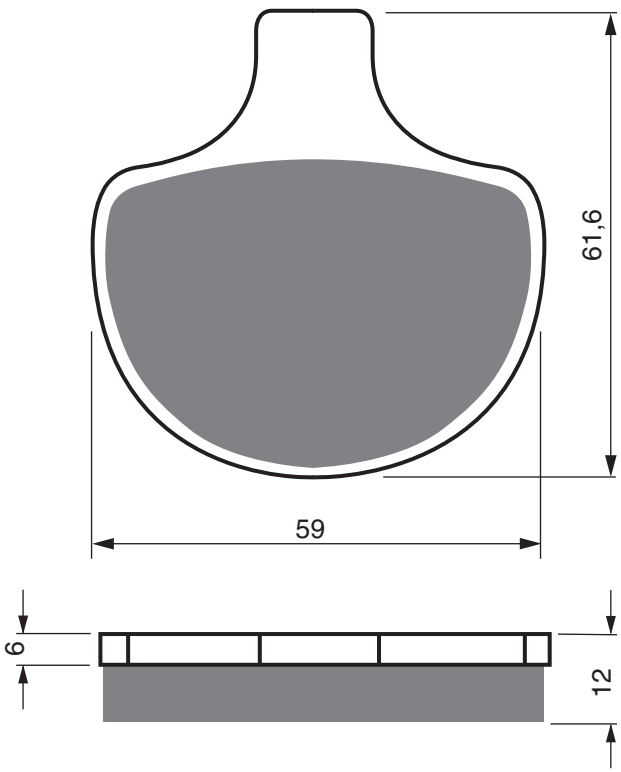

1 Plain Pad
1 Threaded Pad

HARLEY DAVIDSON

FLT		Series (FLT/C559/1)	1988 - 1999	FL	FR
FLT/H		Series	1986 - 1987	FL	FR
XLH	883	Sportster (XL2/C560/1)	1985 - 1986	FL	
XLH	883	Sportster (XL2/C560/1)	1987 - 1989	FL	
XLH	883	Sportster (XL2/C560/1)	1990 - 1999	FL	
XLH	1 100		1986 - 1986	FL	
XLH	1 100	(XL2/C560/1)	1987 - 1988	FL	
XLH	1 100	Sportster (XL2/C560/1)	1985 - 1986	FL	
XLH	1 200	Sportster (XL2/C560/1)	1990 - 1999	FL	
FLHR	1 340		1994 - 1999	FL	FR
FLHT	1 340	Electra Glide (FLT/C559/1)	1985 - 1986	FL	FR
FLHT	1 340	Electra Glide Classic (FLT/C559/1)	1987 - 1990	FL	FR
FLHTC	1 340	Electra Glide Classic	1985 - 1986	FL	FR
FLHTC	1 340	Electra Glide Classic (FLT/C559/1)	1990 - 1999	FL	FR
FLHTC	1 340	Ultra Classic (FLT/C559/1)	1990 - 1999	FL	FR
FLST	1 340	Heritage Softail	1986 - 1987	FL	
FLST	1 340	Heritage Softail	1988 - 1999	FL	
FLSTC	1 340	Heritage Softail Cl.	1990 - 1999	FL	
FLSTF	1 340	Fat Boy	1990 - 1999	FL	
FLSTN	1 340	Heritage Softail Nost.	1993 - 1999	FL	FR
FLT	1 340	(FLT/C559/0)	1984 - 1985	FL	FR
FLTC	1 340	Tour Glide Classic	1985 - 1986	FL	
FXDL	1 340	Dyna Low Rider	1993 - 1999	FL	FR
FXDW	1 340	Dyna Wide Glide	1993 - 1993	FL	
FXDWG	1 340	Dyna Wide Glide	1993 - 1999	FL	FR
FXER	1 340	Low Rider Custom (FXR/C456/1)	1987 - 1988	FL	
FXLR	1 340	Low Rider Custom	1993 - 1999	FL	FR
FXLR	1 340	Low Rider Custom (FXR/C456/1)	1987 - 1988	FL	FR
FXR	1 340	(FXR/C456/1)	1987 - 1988	FL	
FXR	1 340	Super Glide (-/C456/1)	1990 - 1999	FL	FR
FXR	1 340	Super Glide (FXR/C456/0)	1985 - 1986	FL	FR
FXRD	1 340	Super Glide GTE	1985 - 1986	FL	FR
FXRS	1 340	Low Rider (FXR/C456/0)	1985 - 1986	FL	FR
FXRS	1 340	Low Rider Sport (FXR/C456/1)	1987 - 1999	FL	
FXRS	1 340	Low Rider Sport Ed. (-/C456/1)	1990 - 1999	FL	FR
FXRS	1 340	Low Rider, Convert. (-/C456/1)	1990 - 1999	FL	FR
FXRS	1 340	Super Glide	1988 - 1999	FL	FR
FXRT	1 340	Super Glide (-/C456/1)	1990 - 1999	FL	FR
FXRT	1 340	Super Glide (FXR/C456/0)	1985 - 1986	FL	FR
FXST	1 340		1994 - 1994	FL	
FXST	1 340	Softail (FXST/D312/0)	1984 - 1986	FL	
FXSTC	1 340	Softail Custom	1986 - 1987	FL	
FXSTC	1 340	Softail Custom (FXST/D312/0)	1985 - 1986	FL	
FXSTC	1 340	Softail Custom (FXST/D312/0)	1988 - 1999	FL	
FXSTS	1 340	Softail Springer	1996 - 1996	FL	
FXSTS	1 340	Softail Springer (-/D312/0)	1990 - 1991	FL	
FLSTS	1 450	Heritage Springer	2000 - 2003	FL	
FXSTS	1 450	Springer Softtail	2000 - 2004	FL	
FLSTSB	1 584	Softail Cross Bones	2008 - 2011	FL	

EQUIVALENTS OEM

43063 83	44063 83A	44063 839	44063 83C	44247-98A

AD | S3

PART NUMBER

058

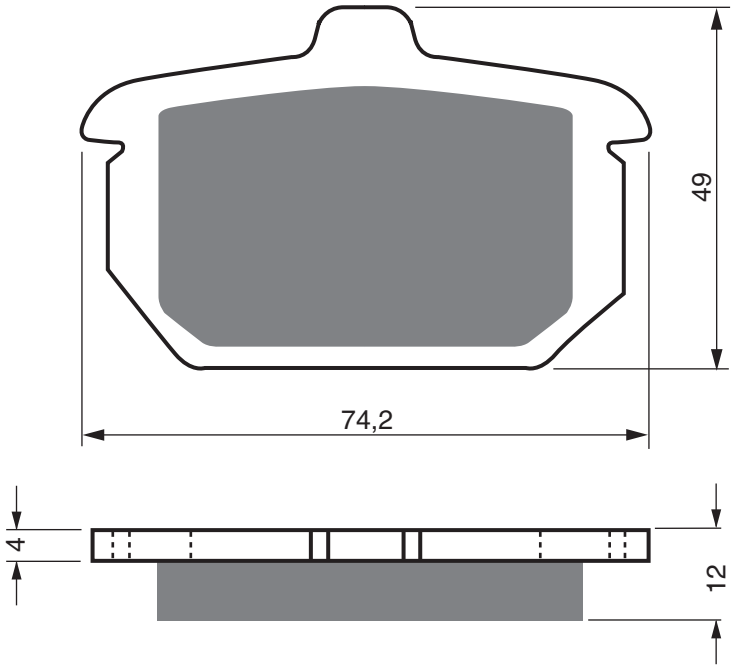

HARLEY DAVIDSON

FXDL			1982 - 1983	RR	
FXDWG			1982 - 1983	RR	
XLH	883	Sportster (XL2/C560/1)	1985 - 1986	RR	
XLH	1 000	Sportster	1983 - 1985	RR	
XLS	1 000	Anniversary	1982 - 1982	RR	
XLS	1 000	Sportster	1983 - 1983	RR	
XLX	1 000		1979 - 1983	RR	
XR	1 000		1985 - 1985	RR	
XLH	1 100		1986 - 1986	RR	
XLH	1 100	Sportster (XL2/C560/1)	1985 - 1986	RR	
FLHT	1 340	Electra Glide (FLT/C559/1)	1985 - 1986	RR	
FLHTC	1 340	Electra Glide Classic	1985 - 1986	RR	
FLST	1 340	Heritage Softail	1986 - 1987	RR	
FLTC	1 340	Tour Glide Classic	1985 - 1986	RR	
FXE	1 340	(FX/C315/0)	1985 - 1986	FL	RR
FXR	1 340	Super Glide	1981 - 1983	RR	
FXRD	1 340	Super Glide GTE	1985 - 1986	RR	
FXRS	1 340	Low Glide	1982 - 1992	RR	
FXRS	1 340	Low Rider (FXR/C456/0)	1985 - 1986	RR	
FXRS	1 340	Super Glide II	1982 - 1983	RR	
FXRT	1 340	Super Glide (FXR/C456/0)	1985 - 1986	RR	
FXRT	1 340	Super Glide II	1983 - 1992	RR	
FXSB	1 340	Low Rider (FXB/C318)	1983 - 1985	RR	
FXST	1 340	Softail (FXST/D312/0)	1984 - 1986	RR	
FXSTC	1 340	Softail Custom	1986 - 1987	RR	
FXSTC	1 340	Softail Custom (FXST/D312/0)	1985 - 1986	RR	
FXWG	1 340	Wide Glide	1983 - 1985	RR	
FXWG	1 340	Wide Glide	1985 - 1986	RR	

EQUIVALENTS OEM

44209 82	44209 82A

PART NUMBER

059

AD | S3

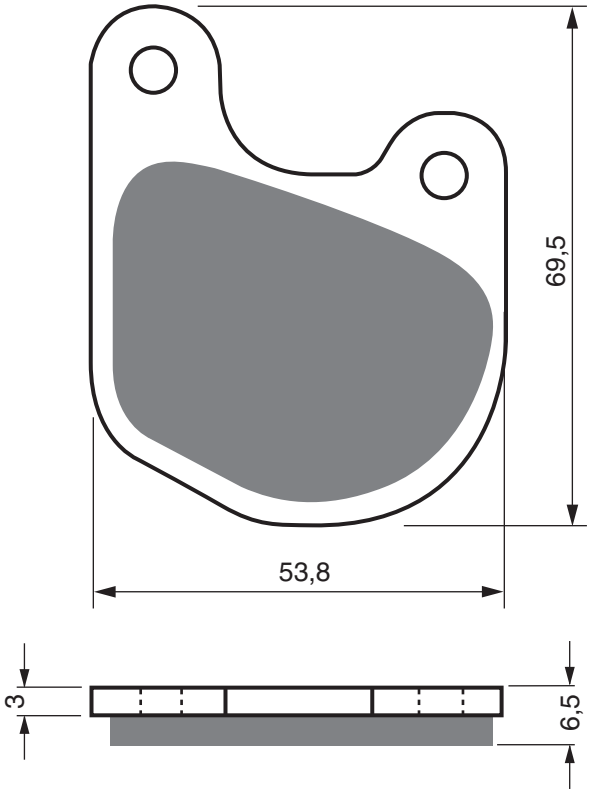

1 Left / 1 Right

HARLEY DAVIDSON

FXD			1982 - 1983	FL	
FXDL			1982 - 1983	FL	
FXDWG			1982 - 1983	FL	
FXLR			1982 - 1983	FL	
FXRD			1982 - 1983	FL	
FXRT			1982 - 1983	FL	
XLH	883		1979 - 1983	FL	
XL	1 000		1979 - 1983	FL	
XLCH	1 000		1979 - 1983	FL	
XLH	1 000	Sportster	1979 - 1981	FL	FR
XLH	1 000	Sportster	1983 - 1985	FL	FR
XLS	1 000	Anniversary	1982 - 1982	FL	FR
XLS	1 000	Roadster	1979 - 1982	FL	FR
XLS	1 000	Sportster	1983 - 1983	FL	FR
XLX	1 000		1979 - 1983	FL	FR
XLX	1 000	61	1984 - 1985	FL	
XR	1 000		1985 - 1985	FL	FR
FX	1 200		1978 - 1983	FL	
FXE	1 200		1973 - 1980	FL	
FXS	1 200		1978 - 1979	FL	
FLTH	1 340	Tour Glide	1984 - 1984	FL	FR
FXB	1 340	80	1980 - 1981	FL	
FXB	1 340	Sturgis	1982 - 1982	FL	FR
FXE	1 340		1980 - 1981	FL	
FXE	1 340		1982 - 1983	FL	
FXE	1 340	80	1978 - 1983	FL	
FXE	1 340	Super Glide	1983 - 1984	FL	FR
FXEF	1 340	80 Fat Bob	1979 - 1981	FL	
FXR	1 340		1978 - 1981	FL	
FXR	1 340	Super Glide	1981 - 1983	FL	
FXRS	1 340	Low Glide	1982 - 1992	FL	FR
FXRS	1 340	Super Glide II	1982 - 1983	FL	FR
FXS	1 340		1980 - 1981	FL	
FXS	1 340	Low Rider	1982 - 1982	FL	FR
FXSB	1 340	Low Rider (FXB/C318)	1983 - 1985	FL	FR
FXWG	1 340	80	1980 - 1981	FL	
FXWG	1 340	Wide Glide	1982 - 1985	FL	FR

EQUIVALENTS OEM

44032 77	44032 79	44098-77

AD | S3

PART NUMBER

060

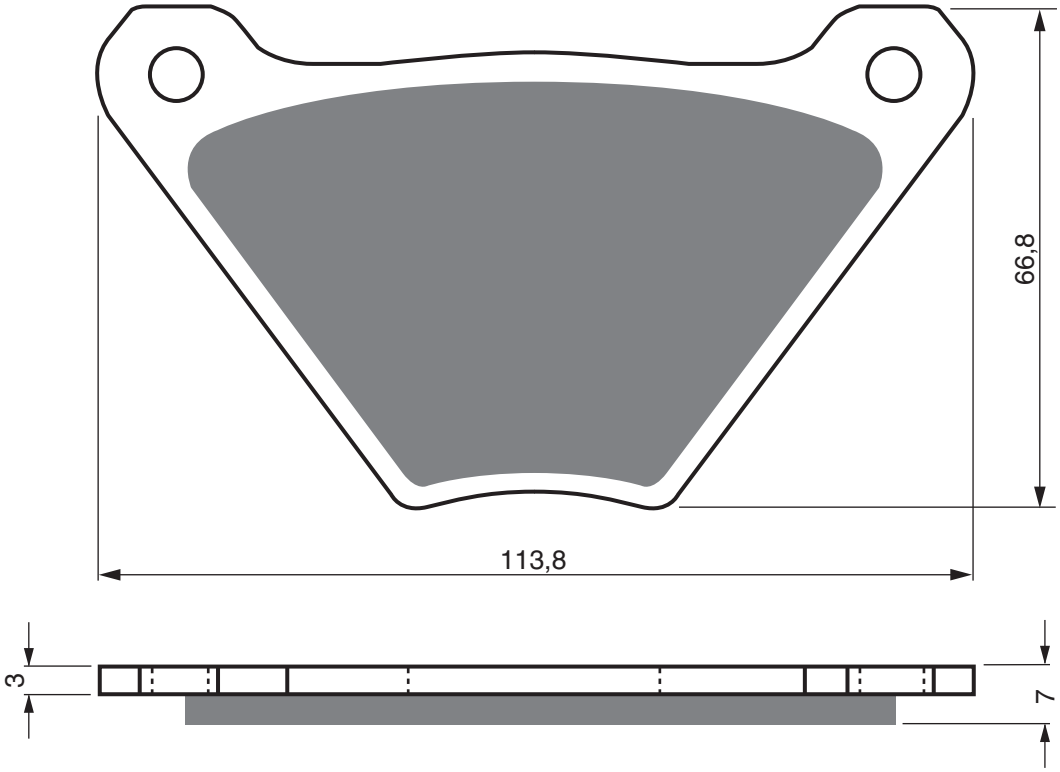

HARLEY DAVIDSON

FL	1 200		1972 - 1984	FL	RR
FLH	1 200		1972 - 1984	FL	RR
FLH	1 200	Anniversary	1978 - 1978	FL	RR
FLH	1 200	Touring	1977 - 1978	FL	RR
FX	1 200		1978 - 1983	RR	
FXE	1 200		1973 - 1980	RR	
FXS	1 200		1978 - 1979	RR	
FLH	1 340	80	1978 - 1980	FL	RR
FLH	1 340	Electra Glide	1982 - 1983	RR	
FLH	1 340	Electra Glide Spec.	1984 - 1990	FL	
FXB	1 340	80	1980 - 1981	RR	
FXB	1 340	Sturgis	1982 - 1982	RR	
FXE	1 340		1980 - 1981	RR	
FXE	1 340	80	1978 - 1983	RR	
FXEF	1 340	80 Fat Bob	1979 - 1981	RR	
FXS	1 340		1980 - 1981	RR	
FXS	1 340	80	1977 - 1982	RR	
FXS	1 340	Low Rider	1982 - 1982	RR	
FXWG	1 340	80	1980 - 1981	RR	

EQUIVALENTS OEM

44005 74	44135 74A	44005-78

PART NUMBER

061

AD | S3

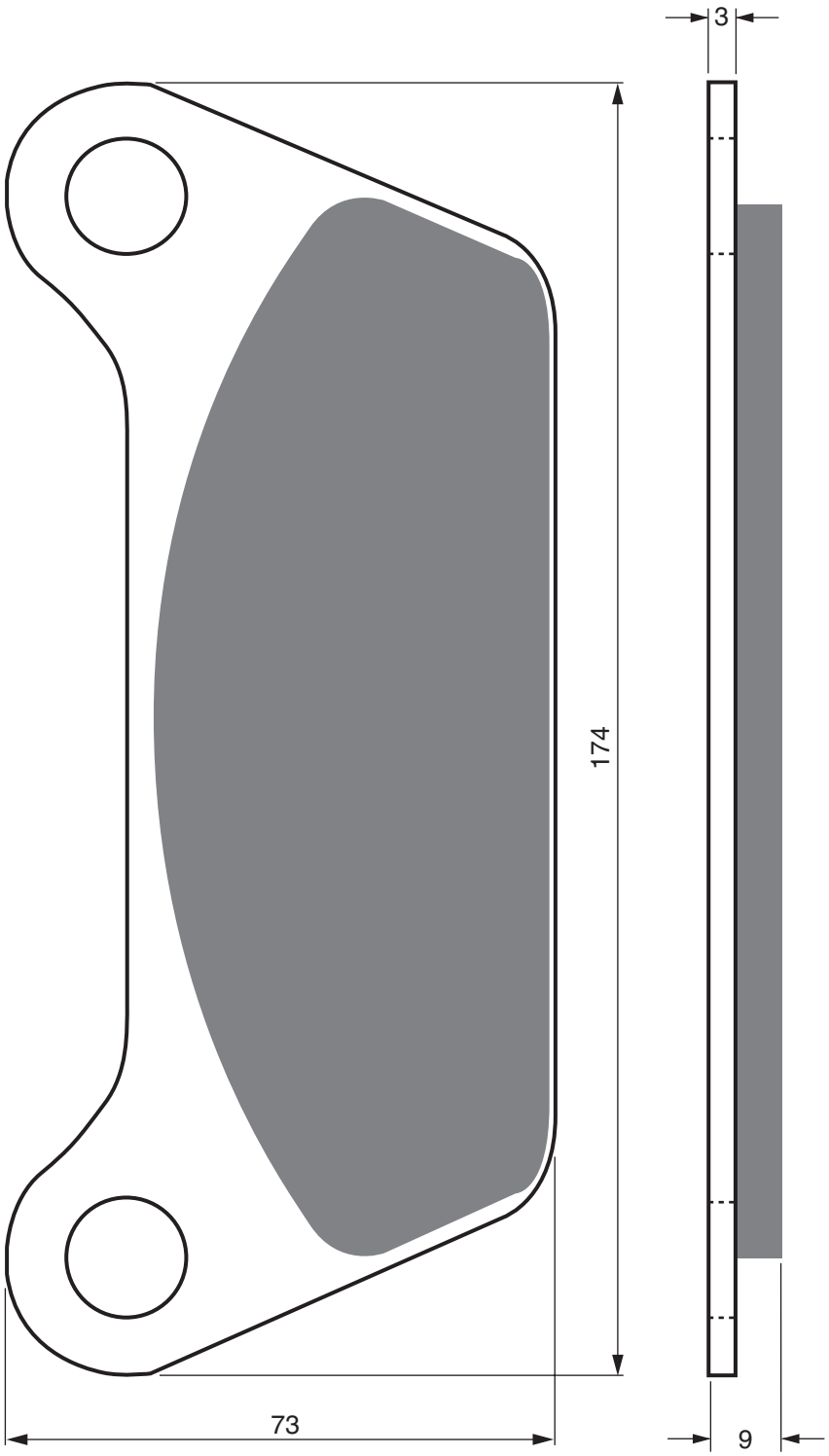

HARLEY DAVIDSON

FLH	1 200		1980 - 1980	RR
FLH	1 340		1981 - 1984	RR
FLH	1 340	Classic	1982 - 1983	RR
FLH	1 340	Heritage	1981 - 1983	RR
FLT	1 340	(FLT/C559/0)	1984 - 1985	RR
FLT	1 340	80	1980 - 1981	RR
FLT	1 340	80 Classic	1981 - 1983	RR
FLT	1 340	Classic	1982 - 1983	RR
FLT	1 340	Tour Glide	1982 - 1982	RR
FLTH	1 340	Tour Glide	1984 - 1984	RR

EQUIVALENTS OEM

43957 80

AD | S3

PART NUMBER

062

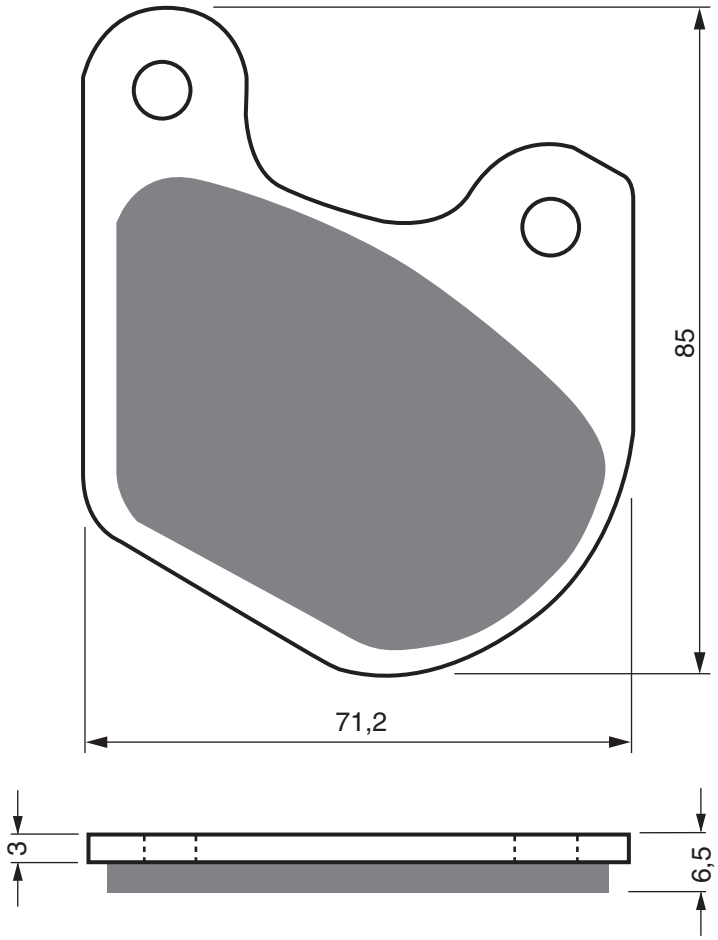

1 Left / 1 Right

HARLEY DAVIDSON

FLHT		1980 - 1983	FL	
FLHTCI		1980 - 1983	FL	
XLH	883	1979 - 1983	RR	
XL	1 000	1979 - 1983	RR	
XLCH	1 000	1973 - 1978	RR	
XLCH	1 000	1979 - 1983	RR	
XLH	1 000 Sportster	1979 - 1981	RR	
XLS	1 000 Roadster	1979 - 1982	RR	
FLH	1 340 Classic	1982 - 1983	FL	FR
FLH	1 340 Electra Glide	1982 - 1983	FL	FR
FLH	1 340 Heritage	1981 - 1983	FL	FR
FLT	1 340 80	1980 - 1981	FL	FR
FLT	1 340 80 Classic	1981 - 1983	FL	FR
FLT	1 340 Classic	1982 - 1983	FL	FR
FLT	1 340 Tour Glide	1982 - 1982	FL	FR

EQUIVALENTS OEM

43395 80	44099 77

PART NUMBER

063

AD | S3

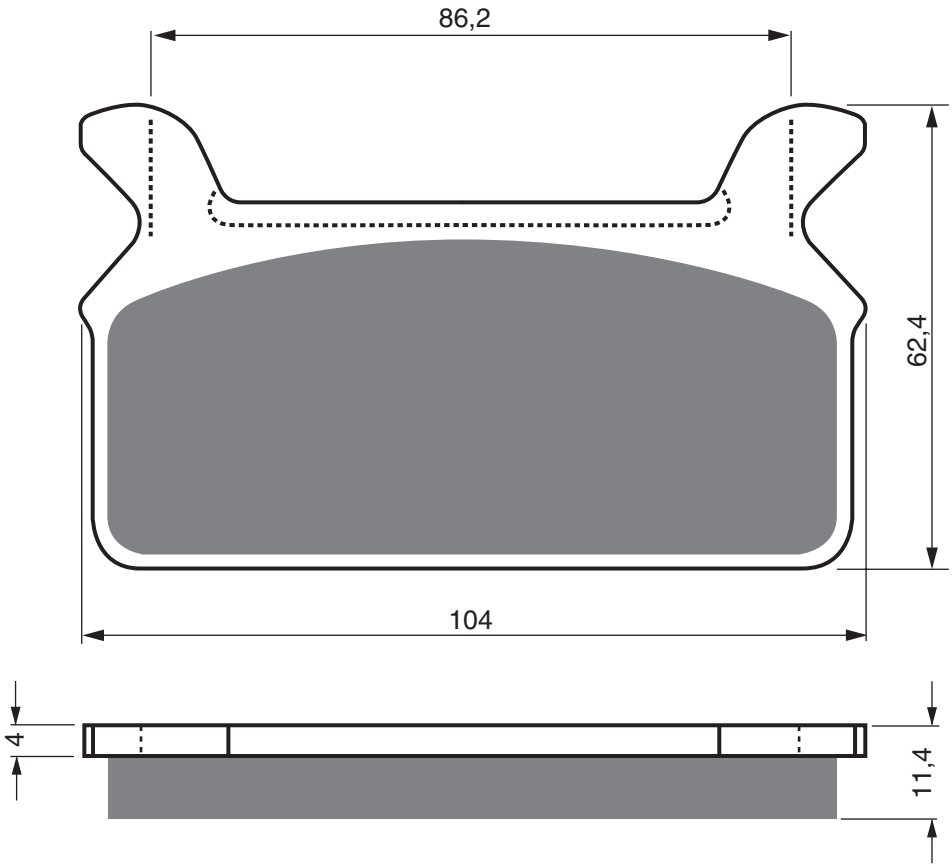

Abutment Shims
(2 per set)

HARLEY DAVIDSON

FLHRCI		1994 - 1999	RR
FLHT		1991 - 1999	RR
FLHTCI		1986 - 1999	RR
FLT	Series (FLT/C559/1)	1988 - 1999	RR
FLT/H	Series	1986 - 1987	RR
FLHR	1 340	1994 - 1999	RR
FLHT	1 340 Electra Glide Classic (FLT/C559/1)	1987 - 1990	RR
FLHTC	1 340 Electra Glide Classic (FLT/C559/1)	1990 - 1999	RR
FLHTC	1 340 Ultra Classic (FLT/C559/1)	1990 - 1999	RR

EQUIVALENTS OEM

43957 86	43957 86A	43957 86B	43957 86D

AD	S3	S33 RACING	GP5	GP6	GP7	GPR

PART NUMBER

064

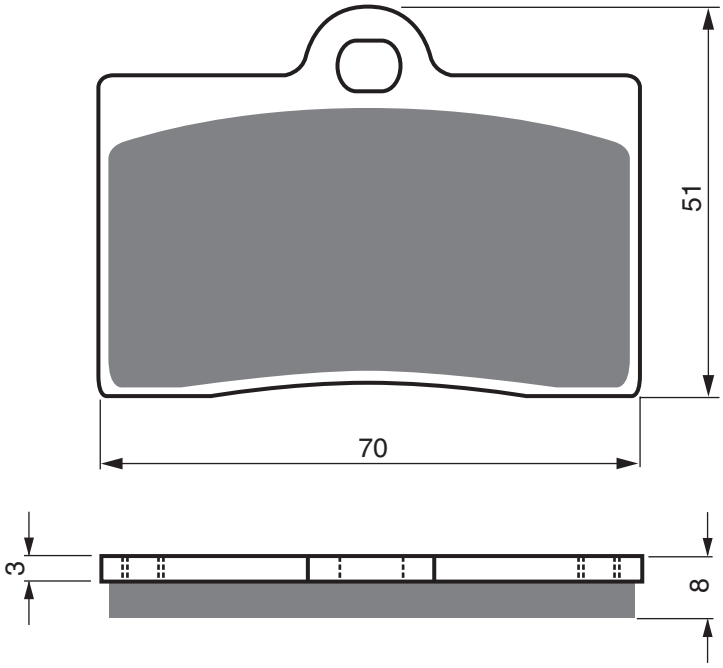

APRILIA

RS4	50	(4T) (J.Juan Calipers)	2011 - 2020	FL	
RS4	125	(4T) (J.Juan Calipers)	2011 - 2020	FL	
RS	250		1995 - 1997	FL	FR
B	500	CR	2002 - 2002	FL	
B	500	MT	2002 - 2002	FL	

BENELLI

666	125	Born in Hell	1998 - 1999	FL	

BETA

	125	Jonathan	2000 - 2001	FL	
	125	Jonathan	2002 - 2005	FL	
	350	Euro	2003 - 2006	FL	
	350	Jonathan	2003 - 2006	FL	

BIMOTA

		Various Models	1989 - 2003	FL	
	992	Tesi 2D	2004 - 2006	FL	FR

BORILE

B	500	CR	2002 - 2004	FL	
B	500	MT	2002 - 2002	FL	

BREMBO RACING CALIPERS

		20 4756 52/62 - 4 Piston P4 30/34 @ 40mm Spacing (Single pin pad fixing)	-	FL	
		20 5165 55/68 Goldline 4 Piston P4 30/34 @ 40mm Spacing (Single pin pad fixing)	-	FL	

CAGIVA

	125	Mito	1993 - 2010	FL	
	125	Planet (3 Spoke Wheels)	1998 - 2003	FL	
	125	Planet (6 Spoke Wheels 2nd Series)	1998 - 2003	FL	
	125	Planet (6 Spoke Wheels/ST Series)	1998 - 2003	FL	
	125	Raptor	2003 - 2010	FL	
N1	125		1997 - 1997	FL	
	500	Mito	2007 - 2007	FL	FR
	600	River	1995 - 1999	FL	

CANNONDALE

S	440		2003 - 2003	FL	

CCM

CR	40	Cafe Racer (Handlebar Fairing)	2007 - 2008	FL	
CR	40	S Cafe Racer (Full Fairing)	2007 - 2009	FL	

DUCATI

	400	Monster	1995 - 1997	FL	FR
	400	Supersport (Single Disc)	1993 - 1997	FL	
	400	Supersport (Twin Disc)	1993 - 1997	FL	FR
	549	cc Supermono	1993 - 1995	FL	FR
	600	Monster (Single Disc)	1993 - 1999	FL	
	600	Monster (Twin Disc)	1993 - 1997	FL	FR
	600	Monster City/City Dark	1999 - 1999	FL	
	600	Monster Dark	1998 - 1999	FL	
	600	Supersport (Single Disc)	1991 - 1997	FL	
	620	Multistrada Dark (Single Disc/Twin Pin Pad Fixing)	2006 - 2006	FL	

PART NUMBER

064

AD | S3 | S33 RACING | GP5 | GP6 | GP7 | GPR

	748	Biposto	1995 - 1998	FL	FR
	748	SP	1995 - 1998	FL	FR
	750	Monster (Single disc)	1996 - 1997	FL	
	750	Monster (Twin Disc)	1996 - 1998	FL	FR
	750	Monster / Monster Dark	1999 - 1999	FL	FR
	750	Monster City / City Dark	1999 - 1999	FL	FR
	750	Supersport (Single disc)	1991 - 1998	FL	
	750	Supersport (Twin disc)	1991 - 1998	FL	FR
	851	Superbike Biposto	1989 - 1992	FL	FR
	888	Superbike Strada	1994 - 1995	FL	FR
SP4	888		1992 - 1993	FL	FR
SP5	888		1992 - 1993	FL	FR
	900	Monster	1993 - 1999	FL	FR
	900	Monster City/City Dark	1999 - 1999	FL	FR
	900	Monster Cromo/Special	1998 - 1998	FL	FR
	900	Supersport	1989 - 1990	FL	FR
	900	Supersport / Superlight	1991 - 1997	FL	FR
	900	Supersport CR USA	1998 - 1998	FL	FR
	900	Supersport FE	1998 - 1998	FL	FR
907	900	IE	1990 - 1993	FL	FR
	907	IE	1990 - 1993	FL	FR
	916	Biposto	1994 - 1996	FL	FR
	916	Senna	1994 - 1998	FL	FR
	916	SP	1994 - 1996	FL	FR
	916	SPS (996cc)	1997 - 1998	FL	FR
FANTIC					
TZ	125	MR (2T) Motard Competizione	2013 - 2013	FL	
TZ	125	SM Caballero Motard (2T)	2011 - 2012	FL	
GAS GAS					
SM	125	(2T)	2001 - 2006	FL	
SM	125	(2T) Supermotard	2003 - 2006	FL	
SM	125	FSE	2002 - 2002	FL	
SM	125	Halley	2009 - 2009	FL	
SM	250	(2T)	2001 - 2006	FL	
SM	250	FSE	2002 - 2002	FL	
SM	400	FSE	2002 - 2002	FL	
SM	400	FSE (2T)	2001 - 2002	FL	
SM	400	FSE (2T)	2003 - 2004	FL	
FSR	450	Supermoto	2007 - 2009	FL	
SM	450	FSR (4T) Supermotard	2007 - 2009	FL	
SM	515	FSR (4T) Supermotard	2007 - 2009	FL	
GILERA					
	350	Saturno Bialbero	1990 - 1990	FL	
	500	Saturno S/Bialbero/Piuma	1990 - 1990	FL	
HONDA					
CBR	900	Evolution Blade	1999 - 1999	FL	FR
HUSQVARNA					
SM	400	R	2002 - 2002	FL	
SM	450	R	2003 - 2006	FL	
SM	510	R	2005 - 2005	FL	
SM	510	R	2005 - 2005	FL	
SM	570	R	2001 - 2004	FL	
SMR	630		2006 - 2006	FL	
INDIAN					
		Chief Blackhawk (Brembo Calipers)	2011 - 2011	FL	FR
		Chief Blackhawk Dark (Brembo Calipers)	2011 - 2011	FL	FR
		Chief Classic (Brembo Calipers)	2011 - 2013	FL	FR
		Chief Deluxe (Brembo calipers)	2009 - 2009	FL	FR
		Chief Roadmaster (Brembo calipers)	2009 - 2011	FL	FR
		Chief Vintage (Brembo calipers)	2009 - 2013	FL	FR
	1 720	Dark Horse (Brembo calipers)	2010 - 2013	FL	FR
ITALJET					
	900	Grifon	2000 - 2000	FL	
KTM					
	125	Sting	1997 - 1999	FL	
	400	Duke LC4	1994 - 1998	FL	
SX	450	SM Factory replica	2004 - 2004	FL	
SX	450	SMR	2004 - 2004	FL	
SX	525	SMR	2004 - 2004	FL	
	620	Duke LC4	1994 - 1998	FL	
	640	Duke-E (Single pin pad fixing)	1998 - 1998	FL	FR
LC4-E	640	(Central single pin fixing)	2003 - 2003	FL	
SMC	660	Supermoto	2003 - 2004	FL	FR
LAVERDA					
	650	All Models	1994 - 1995	FL	
	650	Ghost	1992 - 1992	FL	FR
	668	All models	1996 - 1998	FL	
	750	All Models	1998 - 2001	FL	FR
TTS	800		1999 - 1999	FL	FR
	1 000	Jota	1995 - 1995	FL	FR
MASH					
TT40	400	cc (Trackstar)	2017 - 2020	FL	
MONDIAL					
	1 000	Piega	2002 - 2002	FL	
MOTO-GUZZI					
	1 000	Daytona	1992 - 1995	FL	FR
	1 000	Daytona RS	1997 - 1998	FL	FR
	1 000	V10 Centauro GT	1997 - 1999	FL	FR
	1 000	V10 Centauro Sport	1997 - 1999	FL	FR
	1 100	California EV (Up to KD115426/Single pad pin fixing)	1997 - 2000	FL	FR
	1 100	California Jackal (Up to KD152328 / Single pin pad fixing)	1994 - 2001	FL	FR
	1 100	California Special (Up to KD131644 / Single pin pad fixing)	1999 - 2000	FL	FR
	1 100	Sport Carbs	1994 - 1996	FL	FR
	1 100	Sport Corsa	1998 - 1999	FL	FR
	1 100	Sport EFi	1996 - 1999	FL	FR
V11	1 100	Sport	1998 - 1999	FL	FR
MZ					
		Mastiff 17" FW/Cast Wheel	1999 - 2005	FL	
		Skorpion Sport/Replica/Cup	1995 - 2001	FL	
	660	(MUZ) Scorpion Replica	1997 - 2002	FL	FR
NORTON					
F-1			1990 - 1990	FL	FR
TT			1992 - 1992	FL	FR
PGO					
	125	G Max	2006 - 2008	FL	
	125	G Max (Wave Disc)	2009 - 2012	FL	
	250	G Max	2006 - 2008	FL	
REVTECH					
		CCI Polished Caliper (CC 159-110)		FL	RR
SACHS					
	125	X-Road	2006 - 2007	FL	
XTC	125	N	2000 - 2007	FL	
XTC	125	Supersport	2000 - 2007	FL	
	650	Roadster	2005 - 2005	FL	FR
	800	Roadster	2001 - 2005	FL	FR
B-805	800		2003 - 2004	FL	
TM					
SMR	125	(2T)	2005 - 2011	FL	
SMR	125	(2T)	2012 - 2015	FL	

AD | S3 | S33 RACING | GP5 | GP6 | GP7

PART NUMBER

064

SM	250		2002 - 2002	FL	
SME	250	(4T)	2004 - 2004	FL	
SMM	250	(2T)	2005 - 2014	FL	
SMR	250	(2T)	2005 - 2014	FL	
SMM	300	(2T)	2005 - 2014	FL	
SMR	300	(2T)	2005 - 2014	FL	
SM	400		2002 - 2003	FL	
SME	400	(4T)	2004 - 2004	FL	
SMF	400	F	2002 - 2002	FL	
SMR	400	F	2003 - 2003	FL	
SMR	450	FES	2005 - 2009	FL	
SMX	450	F	2003 - 2003	FL	
	530	(4T) Cross	2002 - 2003	FL	
EN	530	F-ES	2003 - 2004	FL	
SM	530		2002 - 2003	FL	
SME	530	(4T)	2004 - 2004	FL	
SMR	530	FES	2005 - 2009	FL	
SMX	600	F	2003 - 2003	FL	

VOR

SM-E	450	/530	2003 - 2004	FL	

VOXAN

		Street Scrambler	2003 - 2005	FL	FR
	1 000	Café Racer	2002 - 2005	FL	FR
	1 000	Cyclope	2002 - 2002	FL	FR
	1 000	Roadster	2002 - 2005	FL	FR

W.K.BIKES

SP	125	N	2013 - 2015	FL	
SP	250	N	2015 - 2015	FL	

WILWOOD

GP	300	/310 (Part # 150-8733-2)		FL	

YAMAHA

TZR	125	R Brembo Caliper (4DL1/4DL2)	1991 - 1993	FL	
TZR	125	RR	1996 - 1996	FL	
SZR	660	RR	1996 - 1997	FL	

EQUIVALENTS OEM

4SU F5811 00	613 4 004 24	613 4 009 1A	613 4 004 1A	8113585	8000 78331	047 00 2000036
573 V3 030 000	90210 55000	BE250122065SM	800094411	211041010	27 69173	800078331
GU30654600	GU30654602	107 A486 53	211021021	211082009	07009R	B 044 201
B 044 202	53 182 ABE1 9000	N50025061				

PART NUMBER

065

AD | S3

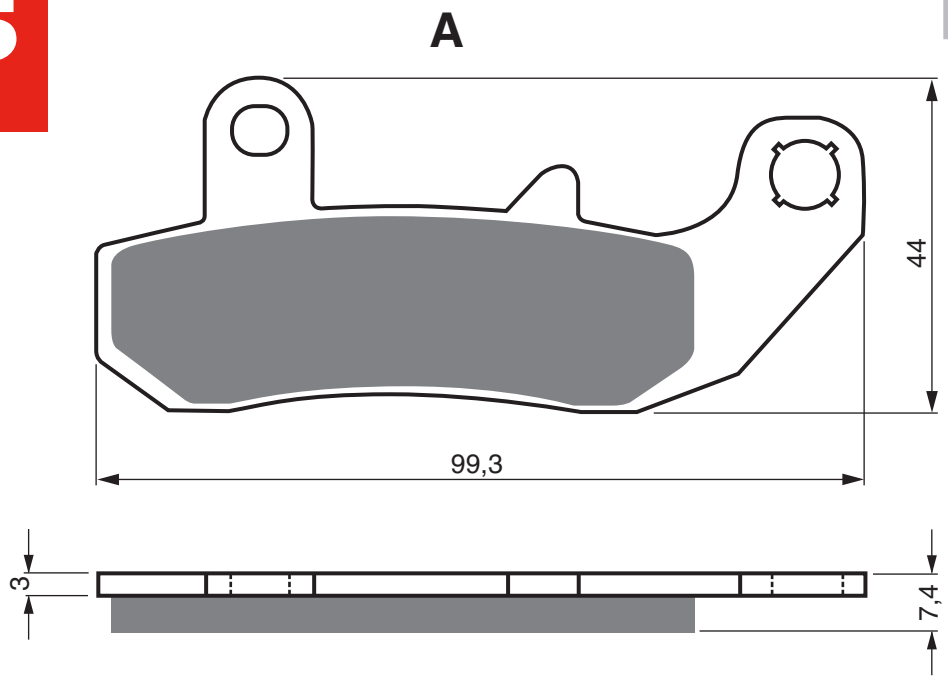

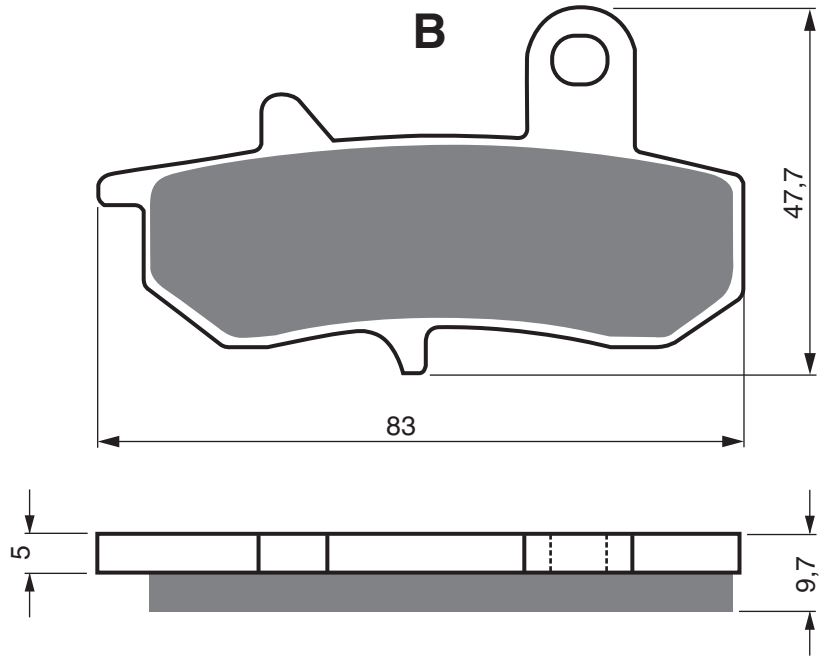

SUZUKI

RG	125	FN/FP/FR (NF13A) Gamma / Rear Disc Model	1992 - 1994	RR
RG	125	FUN/FUP/FUR (NF13B) Gamma / Rear Disc Model	1992 - 1994	RR
RG	125	UN "Wolf" (ND13E) Naked	1992 - 1994	RR
DR	600	RK (SN41A) (Rear disc model)	1989 - 1989	RR
DR	650	RER/RES (SP45A/B)	1994 - 1995	RR
DR	650	RL/RM (SP41A)	1990 - 1991	RR
DR	650	RSEM/RSEN/RSEP (SP43A/B)	1991 - 1993	RR
DR	650	RSL/RSM (SP42A)	1990 - 1991	RR
DR	650	RUN/RN/RUP/RP (SP44A/B)	1992 - 1993	RR
DR	750	SK	1989 - 1989	RR
DR	800	SL	1990 - 1990	RR

YAMAHA

DT	125	Chesterfield Scout	1989 - 1990	RR
DT	125	Tenere	1989 - 1990	RR
DTZ	125	Tenere	1990 - 1990	RR

EQUIVALENTS OEM

69100 44860	69100 12810

AD | S3

PART NUMBER

066

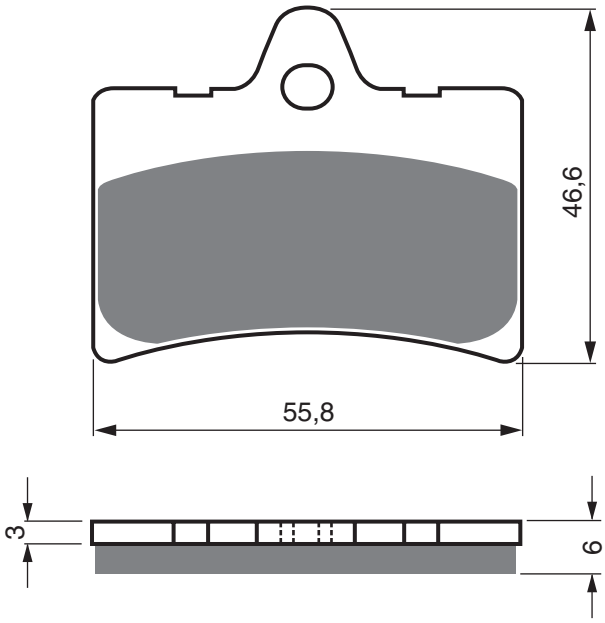

APRILIA

280	Climber	1994 - 1996	RR

BETA

	Gara	1993 - 1995	RR
260	Synt	1993 - 1995	RR
260	Techno	1995 - 1995	RR

CAGIVA

50	Blues	1993 - 1995	FL
50	Prima	1992 - 1994	FL
50	Super City	1993 - 1995	FL
80	Prima	1992 - 1994	FL
80	Super City	1993 - 1995	FL

EQUIVALENTS OEM

800066937

PART NUMBER

067

AD | S3 | S33 RACING

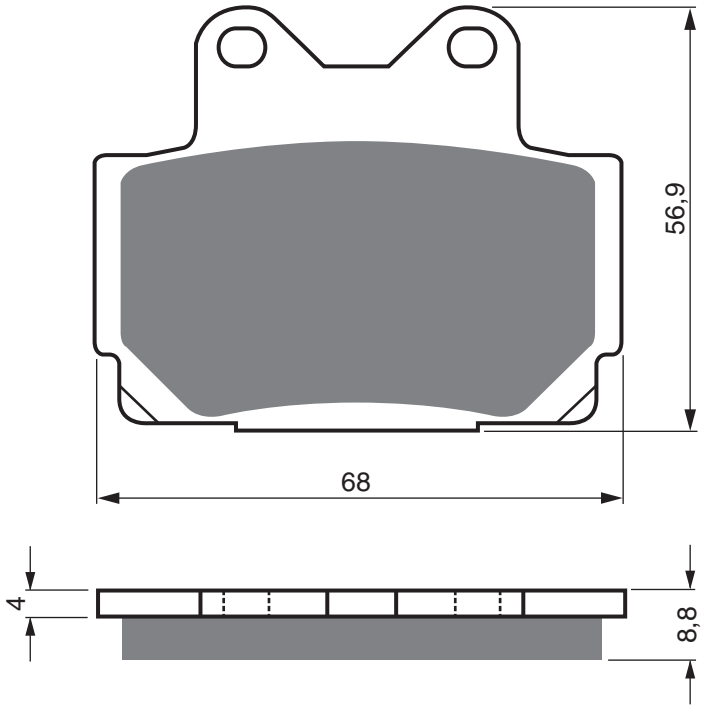

YAMAHA

FZR	50		1990 - 1990	RR		
RD	125	LC (MK 2-3)	1985 - 1987	FL		
RZ	125	(1GV 030101-)	1985 - 1985	FL		
TZR	125		1987 - 1989	FL		
TZR	125		1990 - 1992	RR		
TZR	125	R	1993 - 1993	RR		
TZR	150	R (4AP2)	2000 - 2000	RR		
SDR	200	(2TV)	1987 - 1989	FL	RR	
FZR	250		1987 - 1987	RR		
FZR	250	R	1989 - 1999	RR		
FZX	250	Zeal (3YX1/2/4)	1991 - 1992	RR		
R1-Z	250		1990 - 1992	RR		
RZ	250	R (1AR/1XG)		FL	RR	
RZ	250	R (29L)		RR		
RZ	250	RR (51L)		FL	RR	
SRX	250			FL		
TDR	250	(3CK1/3CK2 Europe) (Eng Frame # 3CK-)	1988 - 1992	RR		
TZR	250	(1KT/2AW Japan) (Eng Frame # 1KT-000/056)	1987 - 1987	RR		
TZR	250	(2MA/2XW1/22XW2 Europe) (Eng Frame # 2MA-)	1987 - 1988	RR		
TZR	250	(2MA/2XW1/2XW2 Europe) (Eng Frame #2MA-)	1989 - 1992	RR		
TZR	250	(2XT1 Japan) (Eng Frame 1KT-09)	1988 - 1988	RR		
TZR	250	(3CK1/3CK2 Europe) ((Eng Frame # 3CK-)	1988 - 1992	RR		
TZR	250	(3MA1 - Reverse Cylinders) (Eng Frame # 3MA-0001)	1989 - 1989	RR		
TZR	250	(3MA3/3MA5) (Eng Frame # 3MA-046/058)	1990 - 1990	RR		
TZR	250	R (3XV1/3X4/3XV6) V-Twin (Eng Frame # 3XV000101-08600)	1991 - 1993	RR		
TZR	250	RS (3XV8/3XV9/3XVA) V-Twin (Eng Frame # 3XV080101/08200 088-)	1992 - 1994	RR		
TZR	250	SP (3MA4) (Eng Frame # 3MA055)	1990 - 1990	RR		
TZR	250	SPR (3XVC) V-Twin (Eng Frame # 3XV 107101-)	1995 - 1995	RR		
RD	350	F/F2	1985 - 1992	FL	FR	RR
RD	350	N	1985 - 1985	FL	FR	RR
RD	350	R	1992 - 1995	FL	FR	RR
FZ	400	(4YR1)	1996 - 1996	RR		
FZ	400	N (IFK 146X 133M)	1985 - 1985	RR		
FZR	400	(3EN1/3EN2)	1988 - 1989	RR		
FZR	400	(3TJ1/2/6/7)		RR		
FZR	400	Genesis (1WG)	1986 - 1986	RR		
FZR	400	RR (4DX)	1992 - 1992	RR		
FZR	400	RSP (2TK EX-UP)	1987 - 1987	RR		
SRX	400		1987 - 1987	RR		
SRX	400	(1JL)	1985 - 1985	RR		
SRX	400	(3VN1/3VN2/3VN5)	1990 - 1996	RR		
XJR	400	(4HM1/4HM2/4HM4/4HM7)	1993 - 1996	RR		
XJR	400	(4MH3/4HM5/4HM6/4HM9/4HMA/4HMB) Brembo Calipers	1995 - 1999	RR		
RD	500	LC (1GE/D769)	1984 - 1986	RR		
RD	500	LC (47X/D467)	1984 - 1987	RR		
RZV	500	R (SIX)	1985 - 1985	RR		
FZ	600		1987 - 1988	RR		
FZS	600	Fazer	1998 - 2003	RR		
SRX	600		1986 - 1987	FL	FR	RR
SRX	600	(1JK)	1985 - 1985	FL	FR	RR
SRX	600	(3SX)	1990 - 1991	RR		
XJ	600	N	1995 - 1997	RR		
XJ	600	N	1998 - 2003	RR		
XJ	600	S "Diversion"	1992 - 1997	RR		
XJ	600	S "Diversion"	1998 - 2003	RR		

EQUIVALENTS OEM

1KT W0046 50	1KT W0046 51	1KT W0046 52	3TJ W0046 00	51L W0046 00	51L W0046 01	51L W0046 02
4AP W0046 00						

AD | S3 | S33 RACING

PART NUMBER

068

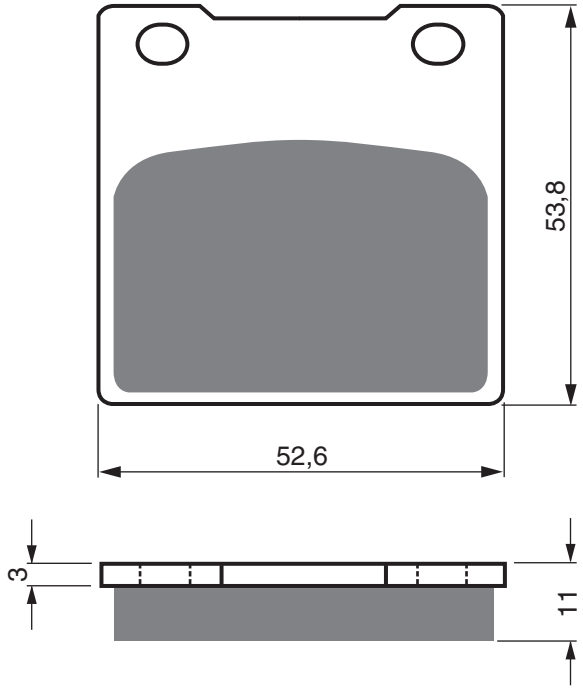

HONDA

CB	250	RSA/RSD	1981 - 1984	FL	
CB	250	T/N/NA/NB/NDB/NDC	1978 - 1982	FL	
CM	250	TB	1981 - 1981	FL	
CB	400	A Honda-Matic	1979 - 1979	FL	
CB	400	T	1978 - 1978	FL	FR
CB	650	Z/B	1979 - 1981	FL	FR
CB	750	KZ	1980 - 1980	FL	FR

EQUIVALENTS OEM

45105 413 003	45105 413 305	45105 413 871	45105 425 003	45105 425 006	45105 471 006	45105 MA5 671
06455 425 405						

PART NUMBER

069

AD	S3	S33 RACING	GP5	GP6	GP7

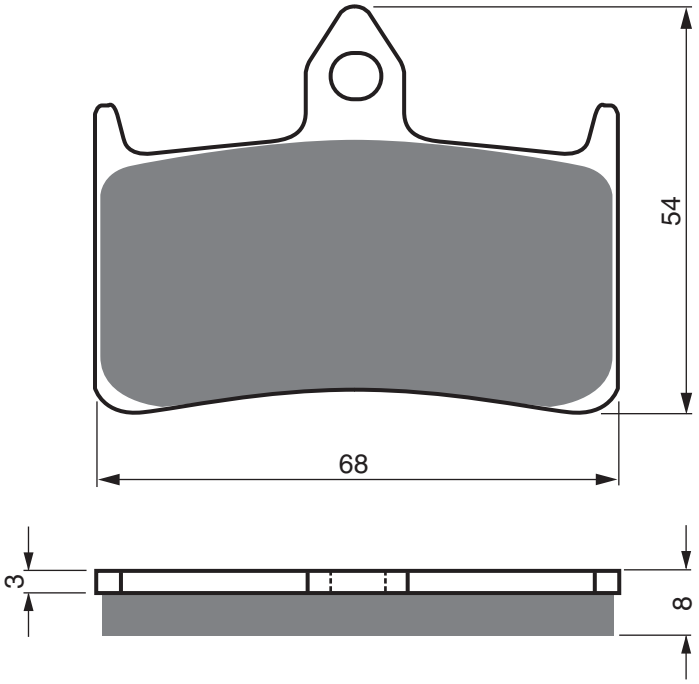

HONDA

CB	250	FT/FV/FX/FY/F1 Hornet	1996 - 2001	FL	FR
NSR	250	R2R/R3R (MC28-110)	1994 - 1994	FL	FR
NSR	250	R2T/R3T (MC28-120)	1994 - 1994	FL	FR
NSR	250	R5K/R5K-2 (MC18-110)	1989 - 1989	FL	FR
NSR	250	R6K/R6K-2 (MC18-110)	1989 - 1989	FL	FR
NSR	250	R7L/R7N (MC21-106)	1990 - 1990	FL	FR
NSR	250	R8L-3 (MC21-101) R9L (MC21-102) R8N/R89N-3 (MC21-106)	1990 - 1992	FL	FR
NSR	250	R9N (MC21-106)	1992 - 1992	FL	FR
NSR	250	RR (MC28-100)	1994 - 1994	FL	FR
CB	400	SF (F2V/F3T) Superfour (NC31)	1996 - 1997	FL	FR
NT	400	Bros (NC25)	1988 - 1988	FL	
RVF	400	RR/RR-II/RT/RT-II (NC35)	1994 - 1996	FL	FR
VFR	400	R3K/R3N/R3L/R3M (NC30)	1989 - 1992	FL	FR
	650	Bros Product One		FL	
NT	650	J/K/L Bros	1988 - 1992	FL	
NR	750	N	1992 - 1992	FL	FR
RVF	750	RR/RS (RC45)	1994 - 1998	FL	FR
VFR	750	RJ/RK/RL (RC30)	1988 - 1990	FL	FR
CB	900	F2/F3/F4/F5/F6/F7 Hornet	2002 - 2007	FL	FR
CBR	900	RRN/RRP Fireblade (893cc)	1992 - 1993	FL	FR
CBR	900	RRR/RRS Fireblade (893cc)	1994 - 1995	FL	FR
CBR	900	RRT/RRV Fireblade (918cc)	1996 - 1997	FL	FR
CB	1 000	FP/FR/FS/FT/FV	1993 - 1997	FL	FR
VTR	1 000	FV/FW/FX/FY/F1/F2/F3/F4/F5/F6 Firestorm	1997 - 2006	FL	FR
CB	1 300	X-4 DCV/DCW/DCX/DCY (SC38)	1997 - 2000	FL	FR

EQUIVALENTS OEM

06455 MAS 305	06455 MBB 006	06455 MCZ 006	06455 MZ1 405	45105 MN8 006	45105 MR7 006	45105 MR7 612
45105 MR7 681	45105 MW0 405	45105 MW0 415	45106 KV3 701			

AD	S3	S33 RACING	GP5	GP6	GP7

PART NUMBER

070

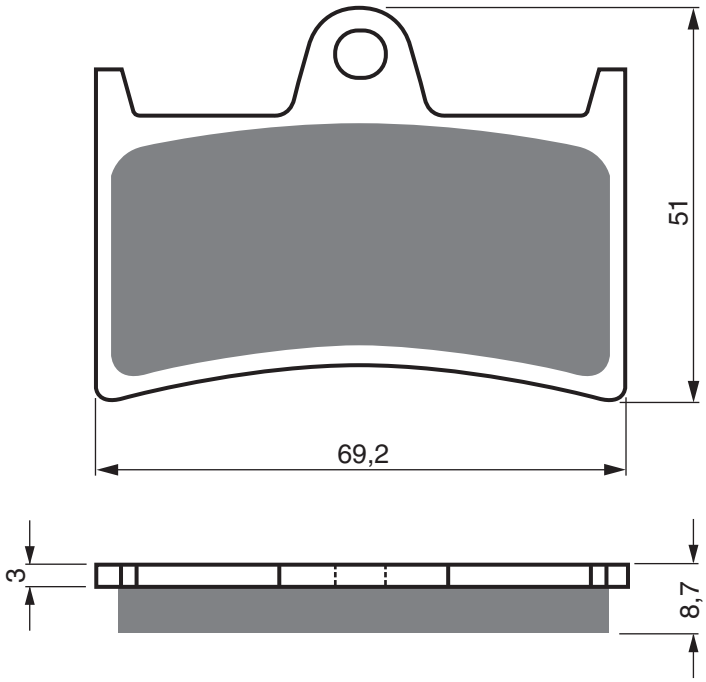

KAWASAKI

ST	700	Stallion	2014 - 2018	FL	FR

YAMAHA

TZR	125	R	1993 - 1993	FL	
TZR	250	(3MA1 - Reverse Cylinders) (Eng Frame # 3MA-0001)	1989 - 1989	FL	FR
TZR	250	(3MA3/3MA5) (Eng Frame # 3MA-046/058)	1990 - 1990	FL	FR
TZR	250	R (3XV1/3X4/3XV6) V-Twin (Eng Frame # 3XV000101-08600)	1991 - 1993	FL	FR
TZR	250	RS (3XV8/3XV9/3XVA) V-Twin (Eng Frame # 3XV080101/08200 088-)	1992 - 1994	FL	FR
TZR	250	SP (3MA4) (Eng Frame # 3MA055)	1990 - 1990	FL	FR
TZR	250	SPR (3XVC) V-Twin (Eng Frame # 3XV 107101-)	1995 - 1995	FL	FR
FZR	400	(3TJ1/2/6/7)		FL	FR
FZR	400	RR (4DX)	1992 - 1992	FL	FR
XP	500	A T-Max (530cc Engine / ABS Models)	2012 - 2016	FL	FR
XP	500	A T-MAX - LUX MAX (ABS)	2016 - 2016	FL	FR
XP	500	Black Bronze Max (59CE)	2013 - 2014	FL	FR
XP	500	T-Max (530cc Engine / Non ABS Models)	2012 - 2016	FL	FR
XP	500	T-Max (ABS Models)	2008 - 2011	FL	FR
XP	500	T-Max (Non ABS Models)	2008 - 2011	FL	FR
	530	D-A T-Max DX (530cc) (ABS)	2017 - 2018	FL	FR
	530	E-A T-Max (530cc) (ABS)	2017 - 2018	FL	FR
XP	530	A (530cc Iron MAX - ABS Models)	2015 - 2016	FL	FR
XP	530	A T-Max SX (530cc) (ABS)	2017 - 2019	FL	FR
FZ6	600	Fazer S2 (ABS) (4 Piston Caliper)	2007 - 2009	FL	FR
FZ6	600	Fazer S2 (ABS/Half Fairing/4 piston caliper) (5S2)	2008 - 2008	FL	FR
FZ6	600	Fazer S2 (Non ABS/Half Fairing/4 Piston Caliper) (4S81/4S8)	2007 - 2009	FL	FR
FZ6	600	S2 (Naked / Non ABS/4 Piston Caliper) (5S51/5S5)	2007 - 2009	FL	FR
FZS	600	Fazer	1998 - 2003	FL	FR
YZF	600	"R6"	1999 - 2002	FL	FR
YZF	600	"R6"	2003 - 2004	FL	FR
YZF	600	R Thundercat	1996 - 2003	FL	FR
YZF	600	R6 (13S1)	2008 - 2016	FL	FR
YZF	600	R6 (Rad.cal.)	2017 - 2020	FL	FR
YZF	600	RRR (R6)	2003 - 2004	FL	FR
MT-07	700	(689cc/2 Cyl) Non ABS	2014 - 2016	FL	FR
MT-07	700	Moto Cage (ABS/2 Cyl)	2015 - 2017	FL	FR
MT-07A	700	(689cc/2Cyl) ABS	2014 - 2018	FL	FR
MT-07A	700	Moto Cage (Non ABS)	2014 - 2016	FL	FR
	700	Tracer (MTT 690)	2016 - 2020	FL	FR
XSR	700	ABS (MTM 690-U)	2016 - 2020	FL	FR
XSR	700	ABS Xtribute	2019 - 2020	FL	FR
YZF	750	R7 "0W02" (Road version) (5FL1)	1999 - 2001	FL	FR
FZ8	800	N-Naked/Single Headlight/Non ABS (RN255/39P1)	2011 - 2015	FL	FR
FZ8	800	NA-Naked/Single Headlight/ ABS (RN256/59P1)	2011 - 2015	FL	FR
FZ8-S	800	Fazer 8 (Top fairing/Twin headlight/Non ABS) (RN251/42P1)	2011 - 2015	FL	FR
FZ8-SA	800	Fazer 8 (Top fairing/Twin headlight/ ABS) (RN252/1BD1)	2011 - 2015	FL	FR
	847	Nikken (ABS) (3 cyl)	2018 - 2020	FL	FR
MT-09	900	(1RC) Non ABS (847cc/3cyl)	2014 - 2016	FL	FR
MT-09	900	(2DR) ABS (847cc/3cyl)	2014 - 2016	FL	FR
MT-09	900	A Sport Tracker (ABS) (847cc/3cyl)	2014 - 2016	FL	FR
MT-09	900	ABS (MT850-A 847cc/ 3 Cyl Engine)	2017 - 2020	FL	FR
MT-09	900	SP ABS (MT850-D 847cc/3 Cyl Engine)	2018 - 2020	FL	FR
MT-09	900	SR Street Rally ABS (847cc/3cyl)	2014 - 2016	FL	FR
MT-09	900	Tracer (ABS847cc/3 Cyl engine)	2015 - 2020	FL	FR
MT-09 Tracer	900	GT ABS (847cc/3 Cyl Engine)	2018 - 2018	FL	FR
TDM	900	(2BO/ABS)	2005 - 2013	FL	FR

PART NUMBER

070

AD | S3 | S33 RACING | GP5 | GP6 | GP7

TDM	900	(5PS/Non ABS)	2002 - 2014	FL	FR
XSR	900	(ABS) (MTM850)	2016 - 2020	FL	FR
XSR	900	Abarth ABS (MTM 850)	2017 - 2018	FL	FR
FZ1	1 000	Fazer (Half Fairing - ABS - 5D0)	2008 - 2015	FL	FR
FZ1	1 000	Fazer (Half Fairing / Non ABS)	2006 - 2015	FL	FR
FZ1	1 000	N/NA Naked (Non ABS/ABS)	2010 - 2015	FL	FR
FZ1	1 000	N/NV (2D11/2/3)	2006 - 2009	FL	FR
FZ1	1 000	S/FZ1-SV	2006 - 2009	FL	FR
FZS	1 000	Fazer	2001 - 2005	FL	FR
MT-10	1 000	(MTN 1000/998cc)	2016 - 2020	FL	FR
MT-10	1 000	SP (MTN 1000D/998cc)	2017 - 2020	FL	FR
MT-10	1 000	Tourer Edition (998cc)	2018 - 2020	FL	FR
YZF	1 000	R "Thunderace"	1996 - 2002	FL	FR
YZF	1 000	R1	1998 - 2000	FL	FR
YZF	1 000	R1	2002 - 2003	FL	FR
YZF	1 000	R1	2004 - 2006	FL	FR
YZF	1 000	R1	2015 - 2020	FL	FR
YZF	1 000	R1 50th Anniversary	2006 - 2006	FL	FR
YZF	1 000	R1 60th Anniversary Edition	2016 - 2016	FL	FR
YZF	1 000	R1 SP	2006 - 2006	FL	FR
YZF	1 000	R1M	2015 - 2020	FL	FR
YZF	1 000	R1M Mission	2020 - 2020	FL	FR
BT	1 100	P/R/S/T/V Bulldog	2002 - 2006	FL	FR

XT	1 200	Z Super Tenere ABS/UBS Brake System	2010 - 2018	FL	FR
XT	1 200	ZE Super Tenere ABS/UBS Brake System	2014 - 2018	FL	FR
XT	1 200	ZE Super Tenere Raid Edition (ABS/UBS Brake system)	2018 - 2018	FL	FR
FJR	1 300	(Non ABS) (5JW)	2001 - 2004	FL	FR
FJR	1 300	A (ABS) (5VS-)	2003 - 2005	FL	FR
XJR	1 300	/1300 SP	1999 - 2001	FL	FR
XJR	1 300	5EA9/5EAG (298mm front disc)	2000 - 2000	FL	FR
XJR	1 300	C/Racer	2015 - 2016	FL	FR
XJR	1 300	L 5EA2/5EA3/5EA4	1999 - 1999	FL	FR
XJR	1 300	M 5EAA/5EAB/5EAC	2000 - 2000	FL	FR
XJR	1 300	N/P (5EAP/5EAR/5EAS/5EAT/5EAW/5EAV/5EAY)(298 mm front disc)	2001 - 2002	FL	FR
XJR	1 300	R/S (5WM1/5WM3/5WM5/5WM6/5WM7/5WM9)	2003 - 2004	FL	FR
XJR	1 300	SP (L) 5EA5/5EA6/6EA8	1999 - 1999	FL	FR
XJR	1 300	SP (M) 5EAD/5EAE/5EAF	2000 - 2000	FL	FR
XJR	1 300	SP (N) 5EAL/5EAM/5EAN	2001 - 2001	FL	FR
XJR	1 300	T/V/W/X/Y (5WMA/5WMC/5WMD/5WMF)	2005 - 2014	FL	FR
MT-01	1 670	(Rad.cal.)	2005 - 2006	FL	FR
XV	1 700	PCR	2003 - 2005	FL	FR
XV	1 900	A Midnight Star	2006 - 2008	FL	FR
XV	1 900	Raider SCL	2012 - 2012	FL	FR
XV	1 900	Roadliner	2006 - 2007	FL	FR

EQUIVALENTS OEM

3JD W0046 00	3MA W0045 00	3TJ W0045 00	4B5 W0045 00	4SV W0045 00	4XV W0045 00	5JJ W0045 00
5SL W0045 00	5VN W0045 00	5VY W0045 00	39P W0045 00	5SL 25805 00	1WS 25805 00	4B5 25805 00

AD	K1	K5	S3

PART NUMBER
071

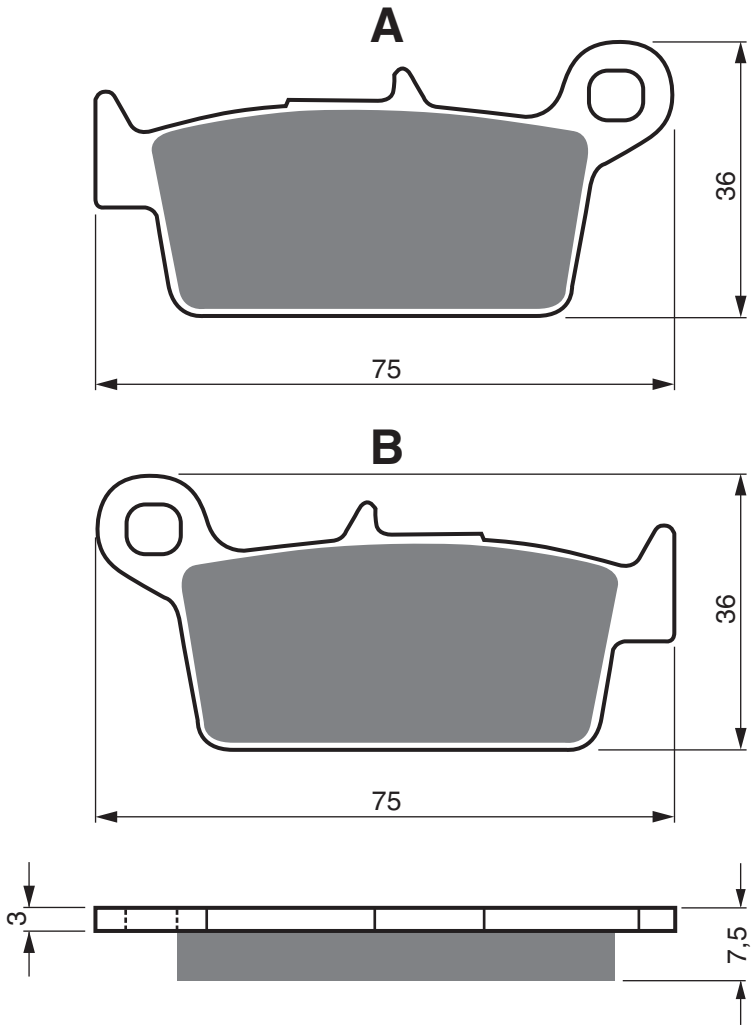

DAELIM				
SC	125	Besbi	2008 - 2013	FL
ENDRESS				
EMR	50		1995 - 1995	FL
HONDA				
NSR	50	X (AC10-190)	1999 - 1999	RR
NSR	75	N/P/R/X/Y (NS-1/NSR80)	1992 - 2000	RR
JINCHENG				
JC	125	2B	1997 - 1997	FL
KYMCO				
	50	Cobra Cross	2000 - 2006	FL
	50	Cobra Exclusive	2001 - 2001	FL
	50	Cobra Racer	1999 - 2000	FL
	50	Cobra Racer (SF10AG)	2000 - 2006	FL
	50	Easy	2001 - 2001	FL
	50	Filly LX	2000 - 2002	FL
	50	Looping	1998 - 1998	FL
	50	Sniper (PR 50 B)	1993 - 1993	FL
	50	Sniper DD (PR50BB)	1994 - 1996	FL
	50	Top Boy (SF10GG)	1996 - 2006	FL
CX	50	Super (PR50AC)	1994 - 1997	FL
K12	50	Sport (SE10CA)	1995 - 2000	FL
KB	50	(SE10CA)	1995 - 2000	FL
KB	50	Scout	1997 - 1997	FL
ZX	50	Fever	1996 - 1996	FL
ZX	50	Super Fever/Scout	1999 - 2006	FL
ZX12	50		2006 - 2006	FL
	100	Top Boy	1997 - 1997	FL
KB	100	Manboy	1999 - 2000	FL
	150	Freeway	1995 - 1995	FL
	250	Super-9	2000 - 2000	FL
MOTOR UNION				
JC	125	2B Deer	1998 - 1998	FL
PEUGEOT				
SV	50	Geo	1991 - 1992	FL
SV	80	Geo	1991 - 1992	FL
SV	125	Geo	1991 - 1992	FL
SACHS				
ER	49	10"	2007 - 2007	FL
SYM				
SR	100	Sunrise	1997 - 1997	FL

EQUIVALENTS OEM

752394	752071	752391	45105 KCX E050	45105 KCX 3050 MZ	45105 KCU 3050	46350 SA50 000

PART NUMBER

072

AD | S3

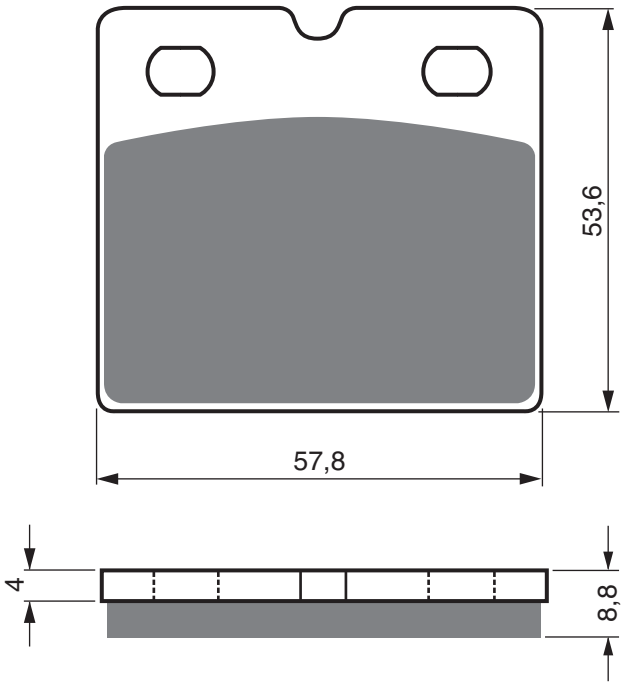

BMW

K75		/75-2 (Non ABS)	1988 - 1996	FL	FR	
K75		/75-S (ABS Model)	1990 - 1996	FL	FR	
K75		C	1988 - 1990	FL	FR	
K75		RT (ABS Model)	1989 - 1996	FL	FR	
K75		S (Non ABS)	1988 - 1995	FL	FR	
K75	750	RT (Non ABS)	1989 - 1996	FL	FR	
K75	750	S (ABS Model)	1988 - 1995	FL	FR	
R80	800	/R80 RT (Double Rotor)	1988 - 1995	FL	FR	
K100	1 000	/2 (ABS - 8 Valve Model)	1988 - 1990	FL	FR	
K100	1 000	/2 (Non ABS - 8 Valve Model)	1998 - 1990	FL	FR	
K100	1 000	LT (ABS - 8 Valve Model)	1989 - 1989	FL	FR	
K100	1 000	LT (Non ABS - 8 Valve Model)	1988 - 1991	FL	FR	
K100	1 000	RS (ABS Model - 8 Valve)	1988 - 1989	FL	FR	
K100	1 000	RS (Non ABS - 8 Valve)	1988 - 1989	FL	FR	
K100	1 000	RT (ABS - 8 Valve)	1988 - 1989	FL	FR	
K100	1 000	RT (Non ABS - 8 Valve)	1988 - 1989	FL	FR	
R100	1 000	RS (A339/3)	1988 - 1992	FL	FR	
R100	1 000	RT	1988 - 1995	FL	FR	

QUADZILLA

RL	500	Buggie	2008 - 2009	FL	FR	RR

EQUIVALENTS OEM

34 11 2 310 494	34 11 2 311 175	34 11 2 331 175	34 11 2 314 546

AD	S3	S33 RACING	GP5

PART NUMBER

073

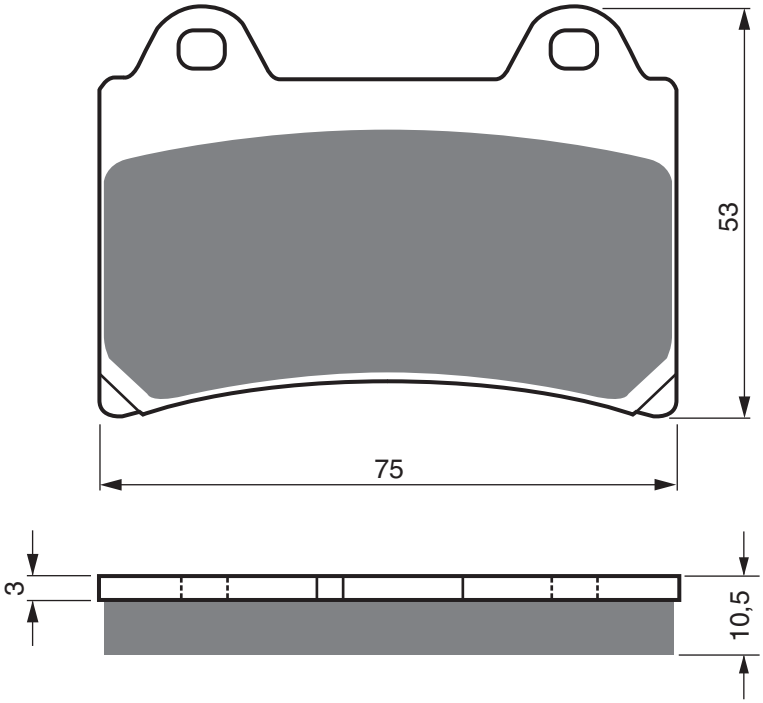

YAMAHA

FZR	250		1987 - 1987	FL	FR	
TDR	250	(3CK1/3CK2 Europe) (Eng Frame # 3CK-)	1988 - 1992	FL		
TZR	250	(1KT/2AW Japan) (Eng Frame # 1KT-000/056)	1987 - 1987	FL		
TZR	250	(2MA/2XW1/22XW2 Europe) (Eng Frame # 2MA-)	1987 - 1988	FL	FR	
TZR	250	(2MA/2XW1/2XW2 Europe) (Eng Frame #2MA-)	1989 - 1992	FL		
TZR	250	(2XT1 Japan) (Eng Frame 1KT-09)	1988 - 1988	FL		
FZR	400	(3EN1/3EN2)	1988 - 1989	FL	FR	
FZR	400	RSP (2TK EX-UP)	1987 - 1987	FL		
SRX	400		1987 - 1987	FL		
SRX	400	(3VN1/3VN2/3VN5)	1990 - 1996	FL	FR	
SRX	600	(3SX)	1990 - 1991	FL		
FZ	750		1989 - 1991	FL	FR	
FZ	750	Genesis	1987 - 1987	FL	FR	
TDM	850		1991 - 1995	FL	FR	
TRX	850		1996 - 1999	FL		
TRX	850	(Italy)	1995 - 1995	FL	FR	
FZR	1 000	Genesis	1987 - 1988	FL	FR	
FJ	1 200	(3CV/3XW Type)	1988 - 1995	FL	FR	
XVZ	1 300	AH/ATH "Royal Star" Royal Star Classic	1996 - 2000	FL	FR	RR
XVZ	1 300	TF "Venture Star"	1999 - 2001	RR		
XVZ	1 300	Venture Royale (3JS/F115)	1986 - 1989	FL	FR	RR
XVZ	1 300	Venture Royale (3JS/F115)	1990 - 1995	FL	FR	RR
XV	1 600	A "Wildstar"	1999 - 2004	RR		
XV	1 700	Road Star Warrior	2002 - 2003	RR		

EQUIVALENTS OEM

1NL W0045 00	1NL W0045 01	1RK W0045 00	1RK W0045 50	1RK W0046 00	2GH W0045 00	2GH W0045 01
3EN W0045 00	4KG W0045 00	4NK W0046 00	4NK W0045 00	4WM W0046 00		

PART NUMBER

074

AD | S3

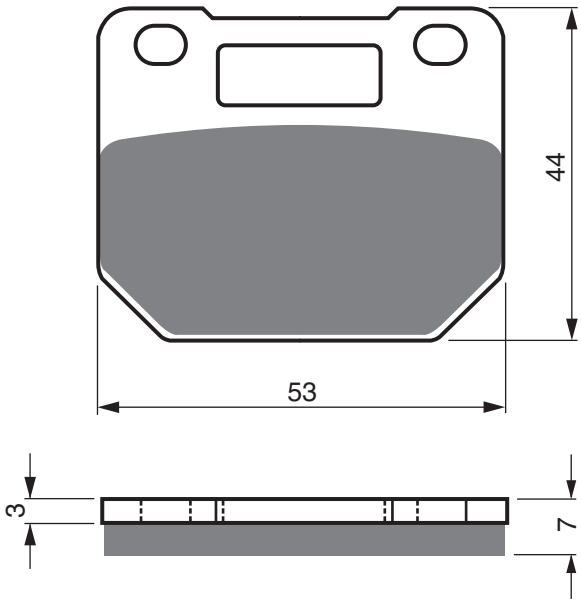

SUZUKI

RG	125	CG/CH/J (NF12A) Gamma / Rear Drum Brake model	1986 -	1990	FL
RG	125	UCG/UCH/UJ/UAJ/BUJ (NF12B) Gamma / Rear Drum model	1986 -	1990	FL

EQUIVALENTS OEM

5910036850	59130 36A00	59130 36A01

AD | S3

PART NUMBER

075

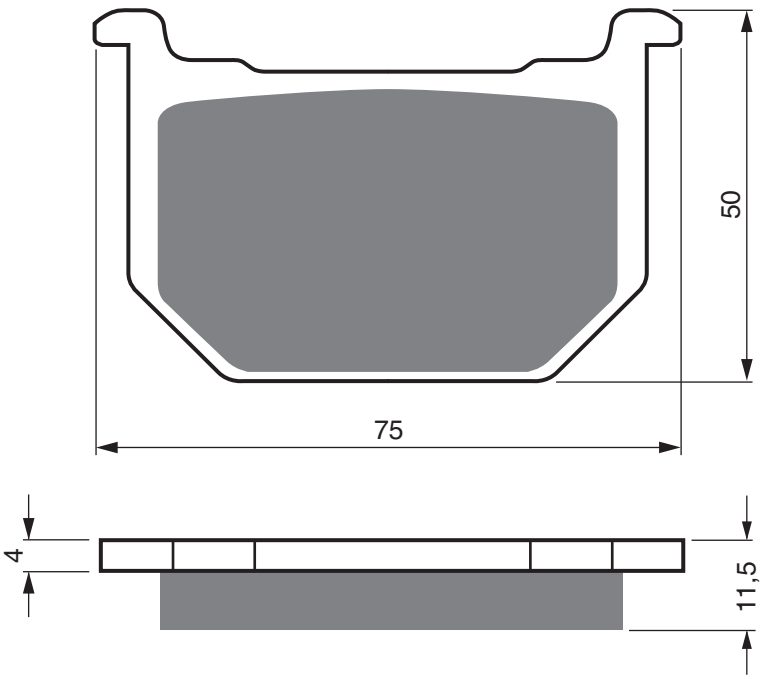

SUZUKI

GN	250	F/J/M/R/T	1985 - 1997	FL	
GS	250	TT/TX	1980 - 1981	FL	
GSX	250	ET/EX/EZ	1980 - 1982	FL	
GN	400	TT	1980 - 1980	FL	
GSX	400	ET/EX/EZ	1981 - 1983	FL	
GSX	400	LX/TX	1981 - 1981	FL	
GS	450	ET/EG/EJ	1980 - 1988	FL	
GS	700	EF/ESF	1985 - 1985	FL	FR
GSX	750	ES (GR72A/D037)	1983 - 1985	FL	FR
GSX	750	ESD/EFE/ESG/ESE/ESH/EFF	1982 - 1986	FL	FR
GSX	750	ET/EX	1980 - 1981	FL	FR
GSX	750	L (GS75X/B895/1/2)	1980 - 1982	FL	FR
GS	850	G, GT, GX, GLX	1980 - 1988	FL	FR
GS	850	GL, GLT	1981 - 1983	FL	FR
GS	850	GZ/GE/GG	1982 - 1985	FL	FR
GS	1 000	GT/GX	1981 - 1982	FL	FR
GS	1 100	GZ	1982 - 1982	FL	FR
GV	1 200	GLF/GLF2/GLG Madura	1985 - 1986	FL	FR

EQUIVALENTS OEM

59130 45230	59301 45810	59301 45811	59301 45850	59300 05810	59330 38300	59330 38310

PART NUMBER

076

AD | S3

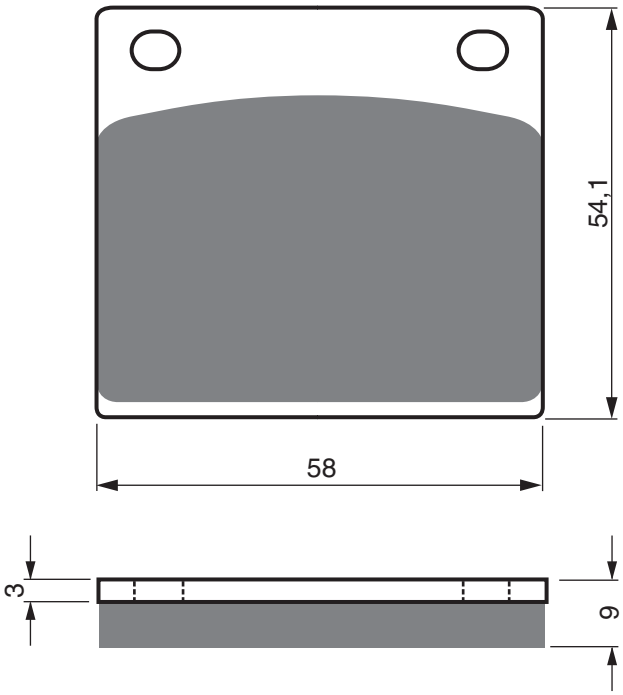

GMA

		2 Piston Rear (Large) Caliper mode A (CCI # 09-997)		RR

KAWASAKI

Z	500	B1/B2	1979 - 1980	RR
Z	650	C3	1979 - 1979	RR
Z	650	D2/D3 (SR)	1979 - 1980	RR
Z	1 000	(Z1F/A/9898/0)	1976 - 1978	RR
Z	1 000	A1/A2/A3/A4	1977 - 1980	RR
Z	1 000	D1/D3 (Z1R)	1978 - 1979	RR
Z	1 000	H1	1980 - 1980	RR
Z	1 000	ST (E1-E2 shaft)	1979 - 1982	RR
Z	1 100	ST (KZT10A/C077/0)	1981 - 1983	RR
Z	1 300	A1-A5	1979 - 1983	RR
ZG	1 300	A1-A3	1984 - 1986	RR

SUZUKI

GSX	400	FD	1983 - 1983	RR
GSX	400	FX/FZ	1981 - 1982	RR
GS	550	EC/EN	1978 - 1979	RR
GS	550	ET/EX/EZ/LT/LX/MX/MZ	1980 - 1984	RR
GS	650	GTX/GTZ/GTD/GX/GZ	1981 - 1983	RR
GS	700	EF/ESF	1985 - 1985	RR
GS	750	B/DB/DC/EC/EN	1977 - 1980	RR
GS	750	L, N, LN (GS750/-)	- 1979	RR
GS	750	SD	1984 - 1983	RR
GSX	750	ES (GR72A/D037)	1983 - 1985	RR
GSX	750	ESD/EFE/ESG/ESE/ESH/EFF	1982 - 1986	RR
GSX	750	ET/EX	1980 - 1981	RR
GSX	750	L (GS75X/B895/1/2)	1980 - 1982	RR
GSX	750	S-2/S-2C (GS75X-114747-) Katana	1984 - 1984	RR
GSX	750	S/SS (G57SX-106815-) Katana	1984 - 1984	RR
GSX	750	SE "Katana"	1985 - 1985	RR
GS	850	G, GT, GX, GLX	1980 - 1988	RR
GS	850	GL, GLT	1981 - 1983	RR
GS	850	GN/GT/GX	1979 - 1982	RR
GS	850	GZ/GE/GG	1982 - 1985	RR
XN	850	Turbo	1983 - 1983	RR
GS	1 000	ET	1981 - 1981	RR
GS	1 000	GT/GX	1981 - 1982	RR
GS	1 000	HC/EC/EN/SN	1978 - 1980	RR
GSX	1 000	SZ Katana	1982 - 1982	RR
GS	1 100	GZ	1982 - 1982	RR
GSX	1 100	ET/EX/EZ/ESD	1980 - 1983	RR
GSX	1 100	SZ/SD Katana	1982 - 1983	RR
GV	1 200	GLF/GLF2/GLG Madura	1985 - 1986	RR

EQUIVALENTS OEM

43050 010	43050 1013	43082 1059	69130 34220	69130 34240	69130 45000	69130 45001
69130 45010	69130 45020	69130 45021	69130 45100	69130 45101	69130 45990	69100 34870
69101 45820	69101 45830	69101 45840	69101 45850 XNA	69101 45860 XNA	69130 45030	

AD	K1	K5	S3	S33 RACING

PART NUMBER

077

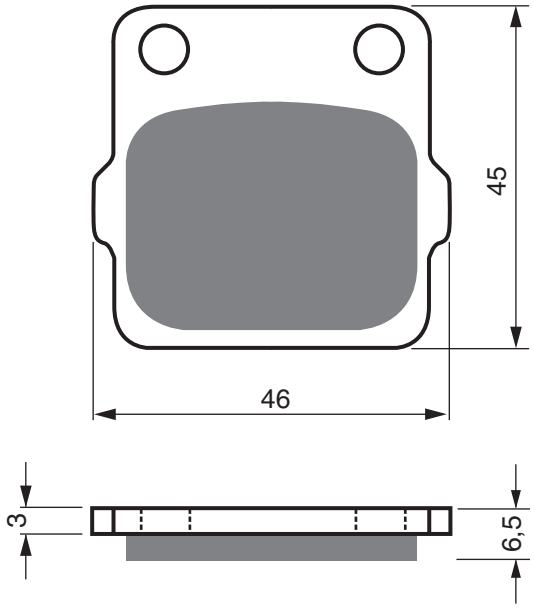

SUZUKI

LT	230	SF-SJ	1985 - 1988	RR
LT	250	RF-RH	1985 - 1987	RR

TM

	80	/85 Minicross/Junior	1996 - 2000	RR

YAMAHA

YZ	65		2018 - 2021	RR
YZ	80	E/F/LWF/LWG/G/LWH/H/LWJ/J/LWK/K/L/LWL/LWM/M/LWN/N	1993 - 2001	RR
YZ	85	(2T - Big wheel F19" / R16")	2002 - 2020	RR
YZ	85	(2T - Small wheel F17"/R14")	2002 - 2015	RR
YZ	125	W	1989 - 1989	RR
YZ	250	W/WRW	1989 - 1989	RR

EQUIVALENTS OEM

69140 26C00	3JD W0046 01	3JD W0046 10	3JD W0046 00	4ES W0046 00	5PA W0046 00
BR8 25806 00					

PART NUMBER

078

AD | S3

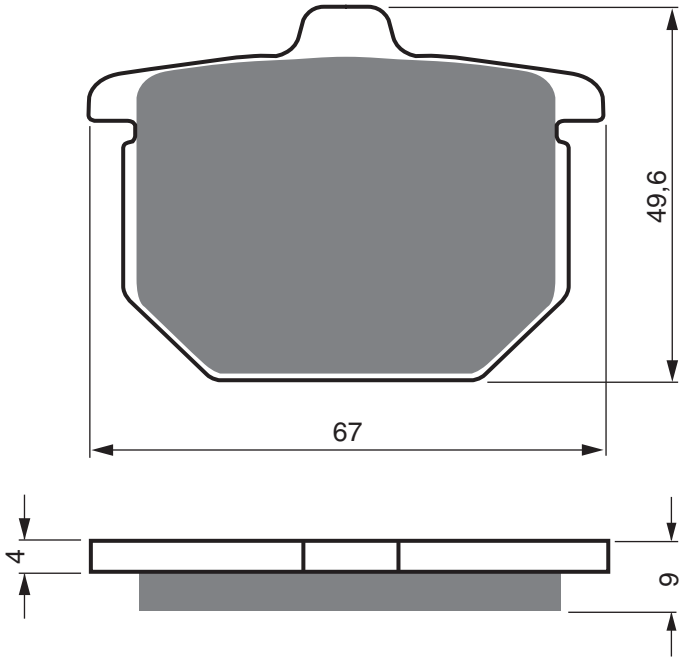

HONDA

CB	750	F2	1978 - 1978	FL	FR	
CB	750	FZ/FA/FB	1978 - 1982	FL	FR	RR
CB	900	FZ/FA	1980 - 1981	FL	FR	RR
CBX	1 000	Z	1979 - 1980	FL	FR	RR

EQUIVALENTS OEM

43105 461 770	45105 371 000	06435 761 405	06455 371 405

AD | S3

PART NUMBER

079

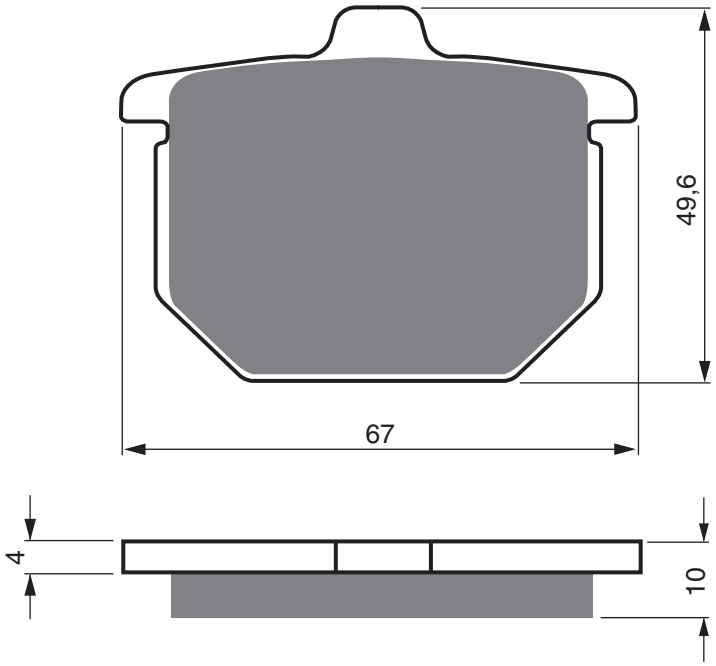

HONDA

CB	400	N/NA/NB	1978 - 1981	FL	FR	
CB	400	NZ	- 1979	FL		
CB	750	F2	1978 - 1978	RR		
GL	1 000	K/K1/K2 Goldwing (6 Bolt disc fixing)	1975 - 1977	FL	FR	
GL	1 100	A/DA/B/DB (SC02)	1980 - 1981	FL	FR	RR

EQUIVALENTS OEM

45105 461 771	45105 461 772	45105 415 006	45105 438 000	45105 438 004	45105 438 007	45105 438 008

PART NUMBER

080

AD | S3

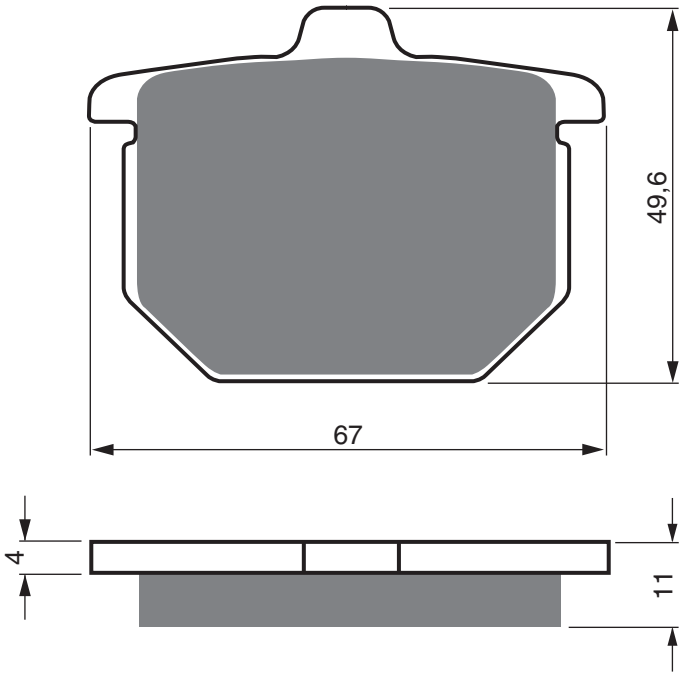

HONDA

CX	500	CA/CB/Z/A/B	1979 - 1981	FL	FR
GL	1 000	K3 Goldwing	1978 - 1978	FL	FR
GL	1 000	Z Goldwing (5 Bolt disc fixing)	1979 - 1979	FL	FR

EQUIVALENTS OEM

43105 461 305	43105 461 771	43105 461 772	45105 415 006	45105 415 770	45105 415 772	45105 410 004
45105 410 006	45105 410 007	45105 410 016	45105 410 026	45105 410 305	45105 415 004	45105 415 305

AD	S3	S33 RACING	GP5	GP6	GP7

PART NUMBER

081

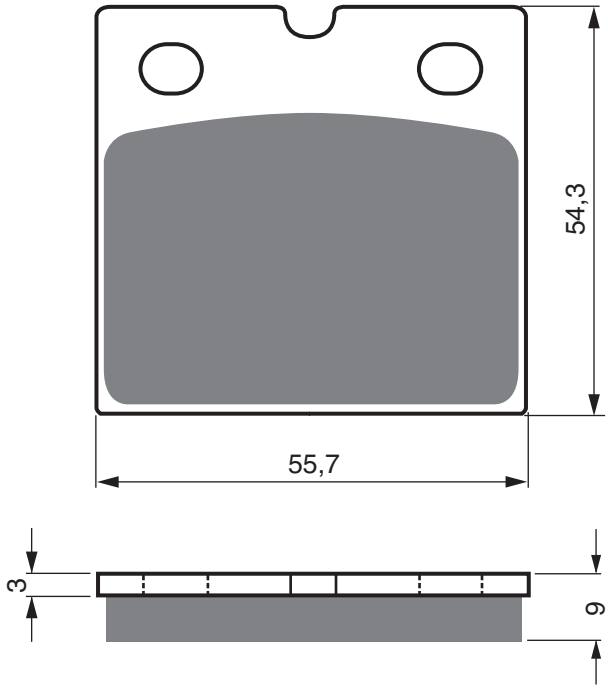

AMERICAN SUSPENSION AFTERMARKET CALIPERS

B17		Mach 8 Standard mount 2 Piston Caliper		FL		
B17		Phantom 2 piston Brake Caliper		FL		
P26		2 Piston Caliper		FL		

BENELLI

	354		1982 - 1982	RR		
	500	4T	- 1976	RR		
	750	SEi (6 cyl)	1975 - 1975	FL	FR	
	900	SEi (6 cyl)	1983 - 1993	FL	FR	

BIMOTA

		All Early Models	1983	FL	FR	RR

BMW

K75		/75-2 (Non ABS)	1984 - 1990	FL	FR	
K75		/75-S (ABS Model)	1990 - 1996	RR		
K75		/75-S (Non ABS)	1984 - 1988	FL	FR	
K75		RT (ABS Model)	1989 - 1996	RR		
K75		S (Non ABS)	1985 - 1988	FL	FR	RR
K75		S (Non ABS)	1988 - 1995	RR		
R		LS (Brembo Caliper)	1981 - 1985	FL	FR	
R45	450	/45N (Single rotor with Brembo Caliper)	1978 - 1985	FL		
R45	450	/45N (Twin Rotor with Brembo caliper)	1978 - 1985	FL	FR	
R65	650	(Double rotor model)	1988 - 1989	FL	FR	
R65	650	GS	1987 - 1992	FL		
R65	650	LS (Brembo Caliper)	1981 - 1985	FL	FR	
R65	650	RT	1985 - 1988	FL	FR	
R65	650	T (Brembo Caliper)	1980 - 1985	FL		
K75	750	C	1985 - 1988	FL	FR	
K75	750	RT (Non ABS)	1989 - 1996	RR		
K75	750	S (ABS Model)	1985 - 1988	FL	FR	RR
K75	750	S (ABS Model)	1988 - 1995	RR		
R80	800	/R80 RT (Double Rotor)	1984 - 1988	FL	FR	
R80	800	GS	1980 - 1987	FL		
R80	800	RT (Double Rotor)	1982 - 1984	FL	FR	
R80	800	RT (Double Rotor)	1982 - 1984			
R80	800	ST	1982 - 1984	FL		
R80	800	TIC	1980 - 1985	FL	FR	
K1	1 000	(16 Valve - ABS)	1988 - 1993	RR		
K1	1 000	(16 Valve - Non ABS)	1989 - 1993	RR		
K100	1 000	(Non ABS - 8 Valve Model)	1982 - 1988	FL	FR	RR
K100	1 000	/2 (ABS - 8 Valve Model)	1987 - 1988	FL	FR	RR
K100	1 000	/2 (ABS - 8 Valve Model)	1988 - 1990	RR		
K100	1 000	/2 (Non ABS - 8 Valve Model)	1987 - 1988	FL	FR	RR
K100	1 000	/2 (Non ABS - 8 Valve Model)	1998 - 1990	RR		
K100	1 000	LT (ABS - 8 Valve Model)	1986 - 1988	FL	FR	RR
K100	1 000	LT (ABS - 8 Valve Model)	1989 - 1989	RR		
K100	1 000	LT (Non ABS - 8 Valve Model)	1986 - 1988	FL	FR	RR
K100	1 000	LT (Non ABS - 8 Valve Model)	1988 - 1991	RR		
K100	1 000	RS (16 Valve - ABS Models)	1989 - 1992	RR		
K100	1 000	RS (16 Valve - Non ABS)	1989 - 1992	RR		
K100	1 000	RS (ABS Model - 8 Valve)	1983 - 1988	FL	FR	RR
K100	1 000	RS (ABS Model - 8 Valve)	1988 - 1989	RR		
K100	1 000	RS (Non ABS - 8 Valve)	1983 - 1988	FL	FR	RR
K100	1 000	RS (Non ABS - 8 Valve)	1988 - 1989	RR		
K100	1 000	RT (ABS - 8 Valve)	1983 - 1988	FL	FR	RR
K100	1 000	RT (ABS - 8 Valve)	1988 - 1989	RR		
K100	1 000	RT (Non ABS - 8 Valve)	1983 - 1988	FL	FR	RR
K100	1 000	RT (Non ABS - 8 Valve)	1988 - 1989	RR		
R100	1 000	/7T (Cast Wheel)	1980 - 1984	FL	FR	
R100	1 000	/7T (Spoke Wheel)	1980 - 1984	FL	FR	
R100	1 000	RS	1980 - 1984	FL	FR	
R100	1 000	RS (A339/2)	1986 - 1988	FL	FR	
R100	1 000	RT	1987 - 1988	FL	FR	
R100	1 000	RT (BMW247/A339/0)	1980 - 1984	FL	FR	
K	1 100	LT (ABS Model)	1989 - 1999	RR		
K	1 100	LT (Non ABS)	1989 - 1999	RR		
K	1 100	RS (ABS Model)	1992 - 1996	RR		
K	1 100	RS (Non ABS Model)	1992 - 1996	RR		
KL	1 100	LT	1989 - 1999	RR		

PART NUMBER

081

AD | S3 | S33 RACING | GP5 | GP6 | GP7

R	1 100	RS	1992 - 2001	RR		
K	1 200	GT (K41) (2 pin rear pad) Disc Has loose bobbins	2003 - 2006	RR		
K	1 200	RS (Non ABS & ABS Models)	1996 - 2000	RR		
K	1 200	RS (With & Without Integral ABS)	2001 - 2004	RR		
DUCATI						
	250	Desmo (4 Bolt Disc Fixing)	1974 - 1977	FL		
	350	Desmo (4 Bolt Disc Fixing)	1974 - 1977	FL		
	450	Desmo (4 Bolt Disc Fixing)	1974 - 1977	FL		
	600	Pantah	1981 - 1981	FL	FR	
	650	Pantah	1984 - 1984	FL	FR	RR
	750	Paso	1987 - 1990	FL	FR	
	750	Sport	1988 - 1990	FL	FR	RR
	751	F1	1998 - 1998	FL	FR	RR
	860	GT/GTX	1975 - 1976	FL	FR	RR
	900	GTS (4 bolt disc fixing) (front & rear)	1975 - 1976	FL	FR	RR
	900	Hailwood Replica (6 bolt disc fixing)	1979 - 1979	FL	FR	RR
	900	SD Darmah (4 bolt front and rear disc fixing)	1977 - 1977	FL	FR	RR
	900	SD Darmah (6 bolt disc fixing front & rear)	1978 - 1978	FL	FR	RR
	900	SD Darmah (6 bolt front disc fixing / 4 bolt rear disc fixing)	1978 - 1978	FL	FR	RR
	906	Paso	1988 - 1989	FL	FR	RR
	1 000	R1 Hailwood Replica	1984 - 1984	FL	FR	RR
HERCULES						
		Silver Star Classic	1993 - 1993	FL		
HOREX						
	125	Imperator	1996 - 1996	FL		
	125	Regent	1996 - 1996	FL		
	500	/600 Columbus	1988 - 1988	FL	FR	RR
	560	E	1996 - 1996	FL	FR	RR
	600	Columbus	1987 - 1987	FL	FR	RR
HRD	600		1985 - 1985	FL	FR	RR
JAWA						
CZ	125	2T		FL		
CZ	125	MX		FL		
	180		1993 - 1993	FL		
CZ	180		1992 - 1992	FL		
	300	Trail	1993 - 1993	FL		
LAVERDA						
SFC	500			FL	FR	RR
SFC	600		1986 - 1986	FL	FR	RR
	650	V-Six	1993 - 1993	FL	FR	RR
SF2	750		1974 - 1974	FL	FR	
SF3	750		1976 - 1977	FL	FR	RR
SFC	750		1974 - 1974	FL	FR	RR
	1 000	3C	1974 - 1975	FL	FR	RR
	1 000	3CL	1976 - 1978	FL	FR	RR
	1 000	3CL Jarama/Jota	1979 - 1981	FL	FR	RR
	1 000	Jota	1976 - 1983	FL	FR	RR
	1 000	RGA/RGS Exec	1983 - 1983	FL	FR	RR
	1 000	RGS	1982 - 1982	FL	FR	RR
	1 000	RGS Corsa	1984 - 1984	RR		
	1 000	SFC	1985 - 1996	FL	FR	RR
TGA	1 000	Executive	1984 - 1984	FL	FR	RR
	1 200		1978 - 1979	FL	FR	RR
	1 200	TS/Mirage	1981 - 1981	FL	FR	RR
MOTO-GUZZI						
NTX	350		1990 - 1990	RR		
V35	350	C		FL	FR	
V35	350	Florida		FL	FR	
V35	350	GT	1990 - 1990	FL		
V35	350	III	1987 - 1987	FL	FR	RR
V65	650	Florida	1986 - 1986	FL	FR	RR
V65	650	GT	1990 - 1990	FL		
S3	750		1975 - 1976	FL	FR	
SP	750		1991 - 1991	FL	FR	
V75	750	TT Paris-Dakar	1986 - 1986	FL	FR	
	850	Le Mans I	1976 - 1977	FL	FR	RR
	850	Le Mans II	1978 - 1980	FL	FR	RR
	850	Le Mans III (12 Spoke Cast Wheel)	1981 - 1984	FL	FR	
	850	T	1974 - 1974	FL		
	850	T3	1975 - 1979	FL	FR	RR
	850	T3 California (with screen/panniers)	1975 - 1979	FL	FR	RR
	850	T4	1980 - 1982	FL	FR	RR
	850	T5	1983 - 1985	FL	FR	RR
	850	T5 California (with screen/panniers)	1983 - 1985	FL	FR	RR
	1 000	California II (Spoke Cast Wheels / Screen & Luggage)	1981 - 1987	FL	FR	RR
	1 000	California III - EFi (VY Chassis Code / Full Fairing / Cast & Spoke Wheels)	1990 - 1993	FL	FR	RR
	1 000	California III Carbs (VW Chassis Code / Screen Only)	1987 - 1993	FL	FR	RR
	1 000	California III Carbs (VY Chassis Code / Full Fairing / Cast & Spoke Wheels)	1988 - 1990	FL	FR	RR
	1 000	GT 1st Series Alloy Wheels & Cast	1987 - 1987	FL	FR	RR
	1 000	GT 2nd Series Alloy Wheels & Cast	1987 - 1991	FL	FR	RR
	1 000	Le Mans IV/V (10 Spoke Cast Wheel)	1984 - 1993	FL	FR	RR
	1 000	SP (12 Spoke Cast Wheels)	1979 - 1983	FL	FR	
	1 000	Strada	1993 - 1994	FL	FR	RR
	1 000	S	1989 - 1994	FL	FR	RR
	1 000	SP II (10 Spoke Cast Wheels/Solid Front Discs)	1984 - 1987	FL	FR	RR
	1 000	SP III (No Spoke Cast Wheels/Flat Floating Front Discs)	1989 - 1994	FL	FR	RR
G5 V	1 000		1978 - 1983	FL	FR	RR
	1 100	California - Carbs (KC/KD Chassis codes)	1994 - 1997	FL	FR	RR
MZ						
	125	/251/301/500 Saxon	1993 - 1997	FL		
ETZ	125	/150/250/300	1985 - 1992	FL		
	150	Saxon	1995 - 1995	FL		
	251	/301 Saxon Tour	1993 - 1998	FL		
	251	Fun	1995 - 1996	FL		
	500	Saxon (All models)	1993 - 1998	FL		
	500	Silver Star Classic	1993 - 1993	FL		
NORTON						
		Classic (Rotary)	1989 - 1989	FL	FR	RR
		Interpol 2 (Rotary)	1989 - 1989	FL	FR	RR
F-1			1990 - 1990	RR		
OSSA						
	500	Yanqee	1978 - 2015	FL		
TRIUMPH						
T140	750	Bonneville (L.F Harris Made Machine / Brembo Calipers) (Meridian Models)	1985 - 1988	FL	FR	RR
ZÜNDAPP						
KS	175	(521-51/A756)	1978 - 1982	FL		

EQUIVALENTS OEM

34 11 1 451 995	34 11 1 454 724	34 11 1 458 388	34 1 2 301 360	34 21 7 657 025	34 21 1 236 221	34 21 2 332 988
14654601	14654650	0795 39 856	0979 39 856	0960 39 656	61654630	00 1865 4660
00 2865 4601						

AD | S3

PART NUMBER

082

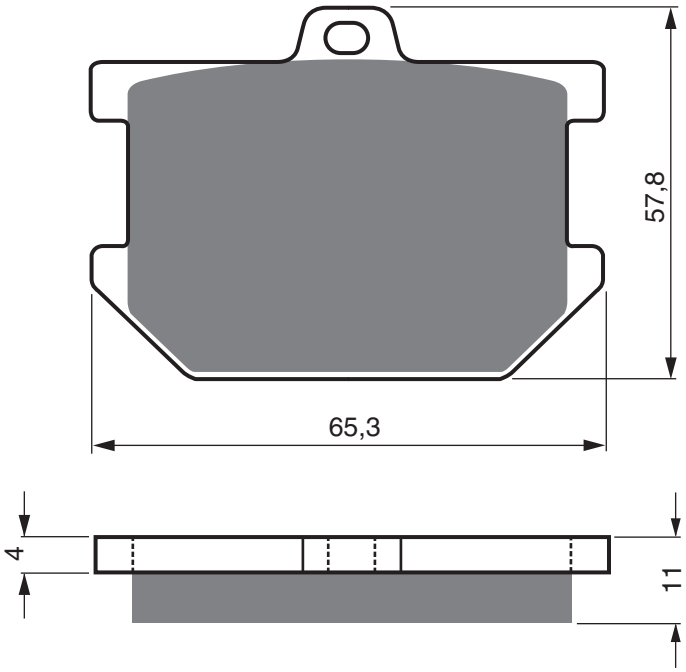

YAMAHA

XS	250	C	1978 - 1978	FL	RR	
XS	250	D/E	1979 - 1981	FL		
XS	360	C	1976 - 1976	FL	RR	
XS	400		1979 - 1979	FL	FR	
XS	400	C	1978 - 1978	FL	RR	
SR	500		1978 - 1982	FL		
XS	500	C/D	1978 - 1979	FL	RR	
XJ	650		1980 - 1984	FL	FR	
XJ	650	LH Midnight	1981 - 1981	FL	FR	
XJ	650	RJ Seca	1982 - 1982	FL	FR	
XS	650		1977 - 1981	FL	FR	
XS	650	SE	1979 - 1980	FL	FR	RR
XS	650	SE	1981 - 1981	FL	FR	
XS	750		1977 - 1979	FL	FR	RR
XS	750	SE	1979 - 1980	RR		
XS	850		1980 - 1980	FL	FR	RR
XV	1 000	TR1	1981 - 1981	FL	FR	
XS	1 100		1978 - 1980	FL	FR	
XS	1 100		1978 - 1980	RR		
XS	1 100	S	1981 - 1981	RR		

EQUIVALENTS OEM

1J3 20000 11	1J3 20000 13	1J3 20000 63	1J3 20000 64	1J3 20000 70	1J3 W0045 00	1J3 W0046 00
1J9 20000 02	1L9 W0045 00	1L9 W0046 00	JU4 W0046 01	1U4 W0046 02	2J2 W0046 00	2J2 W0046 01
2M0 W0046 00	2M0 W0046 01	3G1 W0046 00	3H5 W0045 00	3H5 W0045 01	4K0 W0045 00	4K0 W0045 01
4K0 W0045 02						

PART NUMBER

083

AD | S3

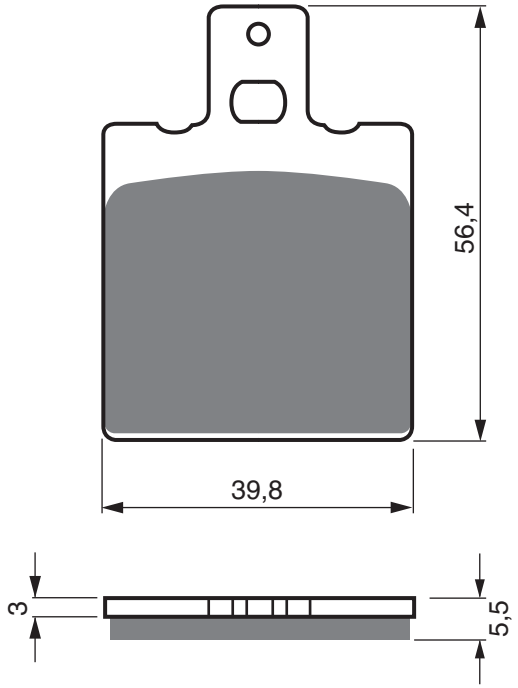

GARELLI						
	50	Urka	1991 - 1991	FL		
	125	XR/XRD Tiger	1985 - 1985	FL		
GILERA						
	50	Rally	1987 - 1987	FL		
R1/	50		1990 - 1990	FL		
KTM						
GXE	50	(KTM50GXE/E215)	1989 - 1989	FL		
GXR	50		1989 - 1989	FL	FR	
MX	50		1991 - 1991	FL		
MX	80		1986 - 1992	FL		

AD	K1	K5	S3

PART NUMBER

084

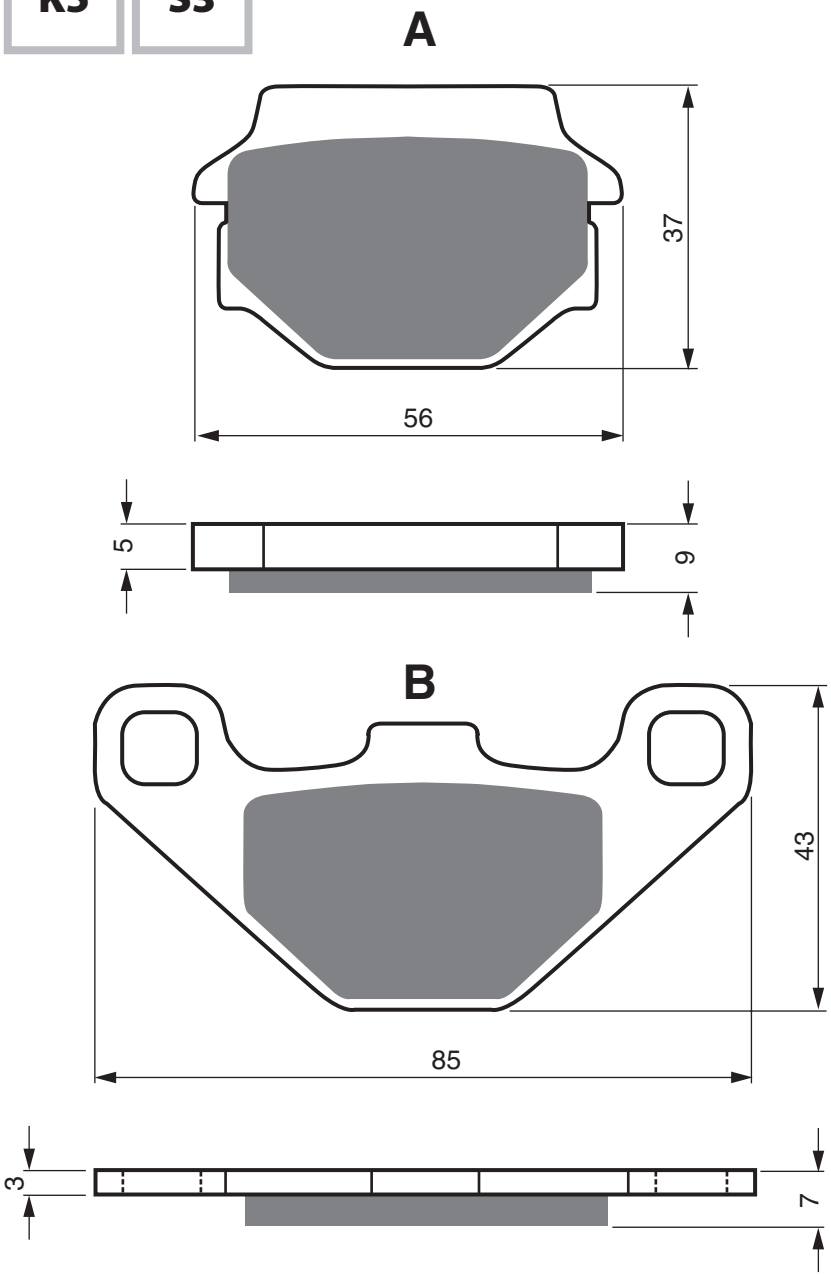

HUSABERG				
		All models	1995 - 1998	RR
FE	350	Enduro	1991 - 1994	RR
FE	400	/530/650 Supermoto	1993 - 1998	RR
FE	501	Enduro	1991 - 1994	RR
HUSQVARNA				
TE	510	Dart	1990 - 1990	RR
KAWASAKI				
KLE	250	A2 Anhelo	1995 - 1995	RR
KLE	250	A3	1997 - 1997	RR
KLE	250	A5/A6	2000 - 2001	RR
ZR	250	A1-A5 Balius	1991 - 1995	RR
ZXR	250	C1-C3 (ZX250 C1-C3)	1991 - 1995	RR
ZXR	250	R (ZX 250 D1)	1991 - 1991	RR
ZZR	250	(EX 250 H1-H13)	1990 - 2003	RR
ZR	400	D1/D3/D4 Zanthus	1992 - 1995	RR
GPZ	500	S (EX500 D1-D7)	1994 - 2001	RR
KLE	500	A1-A12	1991 - 2004	RR
KLE	500	B1P/B6F/B7F	2005 - 2007	RR
KLR	650	A1-A3	1987 - 1989	RR
KRAM-IT				
ER	125	/250/300 RV3	1988 - 1988	RR
ER	500		1996 - 1996	RR
KTM				
		GS, EXC, Enduro models	1991 - 1993	RR
MX		125-600 ccm.	1991 - 1992	RR
GS	125		1992 - 1992	RR
GS	300	Enduro	1993 - 1994	RR
MX	300		1990 - 1990	RR
MX	300		1992 - 1992	RR
LC4	350		1992 - 1992	RR
LC4	400		1993 - 1999	RR
LC4	620	Supermoto with 320 mm disc	1994 - 1998	RR
LAVERDA				
	700	El Cid	1990 - 1990	RR

EQUIVALENTS OEM

430 821 116

PART NUMBER

085

AD | S3

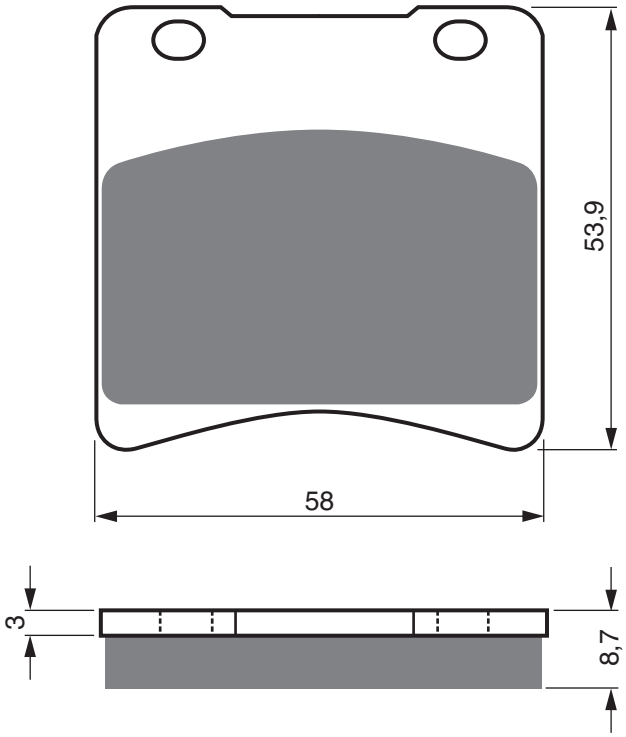

SUZUKI

LT	230	EH-EP	1986 - 1993	FL	FR
GSX	250	R CH/H (GJ72A)	1980 - 1982	FL	FR
GSXR	250	CK	2017 - 2021	FL	FR
GSXR	250	J (GJ72A)	2002 - 2005	FL	FR
GSX	400	R3 (GK71F)		FL	FR
GSX	400	X/XA/XS Impulse		FL	FR
GSX-R	400	H	1987 - 1987	FL	FR
RG	400			FL	FR
RG	400	EWF/EW-2G/EWH Walter Wolf (Type 1 &2)	1985 - 1987	FL	FR
VS	400	VR/FR/VTR/FTR/V-T/F-T	1994 - 1994	FL	FR
RG	500	G/CH	1985 - 1987	FL	FR
VS	600	GL Intruder (VN51B/G973)	1997 - 2005	FL	
VS	600	GLS/GLT/GLV	1995 - 1997	FL	FR
VS	700	GLEFG/GLEPG/GLEFH/GLEPH (Cast Wheel 5 Bolt)	1986 - 1987	FL	FR
VS	700	GLFG/GLPHG (Spoke Wheel 5 bolt)	1986 - 1986	FL	
VS	700	GLFH/GLPH (Spoke Wheel 6 Bolt)	1987 - 1987	FL	
GS	750	RF	1985 - 1985	FL	FR
GSX-R	750	F/G/H	1985 - 1987	FL	FR
VS	750	GLEFG/GLEPG/GLEFH/GLEPH Intruder (Cast Wheel 5 Bolt) (VR51A)	1987 - 1987	FL	
VS	750	GLFH/GLPH Intruder (Spoke Wheel 6 Bolt) (VR51A)	1987 - 1987	FL	
VS	750	GLPK/GLPL/GLPM Intruder (Spoke Wheel 6 bolt) (VR51A)	1988 - 1991	FL	
VS	800	GLN/GLP/GLR/GLT/GLS/GLV/GLW/GLX	1992 - 1999	FL	
GSX	1 100	EFE/EFF/ESF	1984 - 1986	FL	FR RR
GSX	1 100	FJ/FK/FL/FM/FN/FP/FR (GV72A)	1988 - 1994	RR	
GSX-R	1 100	G/H/J	1986 - 1988	FL	FR
GV	1 400	GDG/GTG Cavalcade (Up to F/No 103764)	1986 - 1986	FL	FR RR
VS	1 400	GLPH/GLFH/GLPJ/GLFJ/GLPR/GLPT/GLPV/GLPW/ GLPX/GLPY/GLPK1/GLPK2 Intruder	1987 - 2003	FL	FR RR
VL	1 500	W/X/Y/K1	1998 - 2001	FL	FR RR

EQUIVALENTS OEM

5910010810	5910020810	5910020820	5910030810	5910006820	5910030820	5910038820
59130 00A00	59130 00A10	59130 06B10	59130 06B20	5913000810	59130 24A00	59130 27A00
59130 27A10	59130 30B00	59130 30B01	59130 30B21	6910038810	6910038820	6910038840
6910038860	6910038870	6910048810	69130 38B10	69130 38B00	69130 48B00	6913038820
6913048810						

AD | S3

PART NUMBER

086

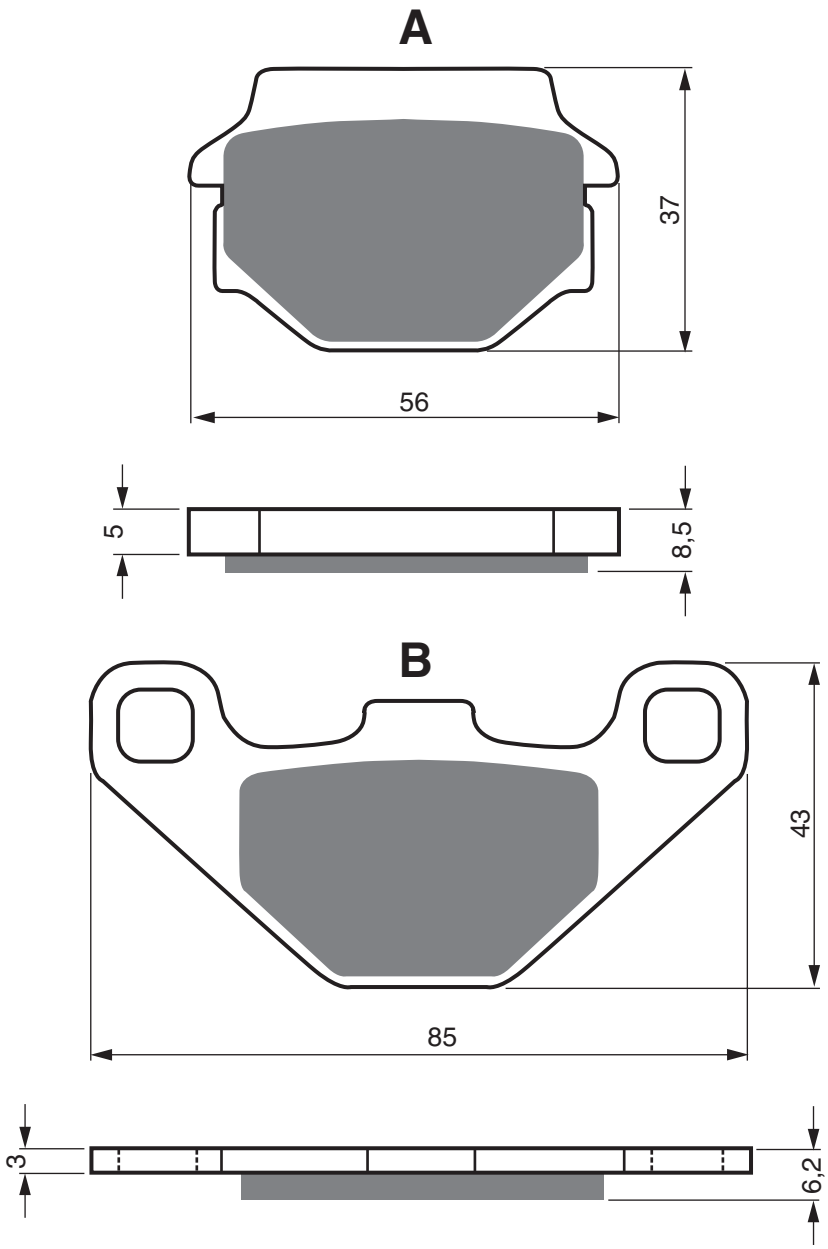

FANTIC

50	/50.1 Raider	1981 - 1981	FL
50	Strada	1982 - 1982	FL

MALAGUTI

50	Enduro MEX	1987 - 1987	FL
50	Enduro MSX	1985 - 1985	FL
50	MDX Gold Enduro	1987 - 1987	FL

SACHS

50	Supra 4 GP	FL

EQUIVALENTS OEM

238 07 6340	240 07 6340

PART NUMBER

087

AD | S3

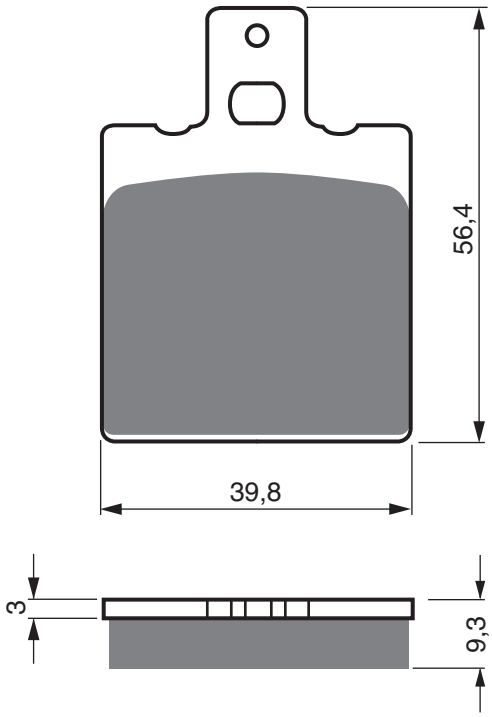

HONDA

CRM	125	RL/RM/RN/RP/RR/RV/RX (JD10)	1990 - 1999	RR
NSR	125	FJ/FK/FL/FM/FN	1988 - 1992	RR
NSR	125	RK/RL/RM/RN/RR/RS/RV/RW/RX/RY/R1	1989 - 2001	RR

EQUIVALENTS OEM

43105 KBS 405	43105 KBS W00	43105 KY4 901	43105 KY4 902	43105 NW2 610

AD	K1	K5	S3	S33 RACING

PART NUMBER

088

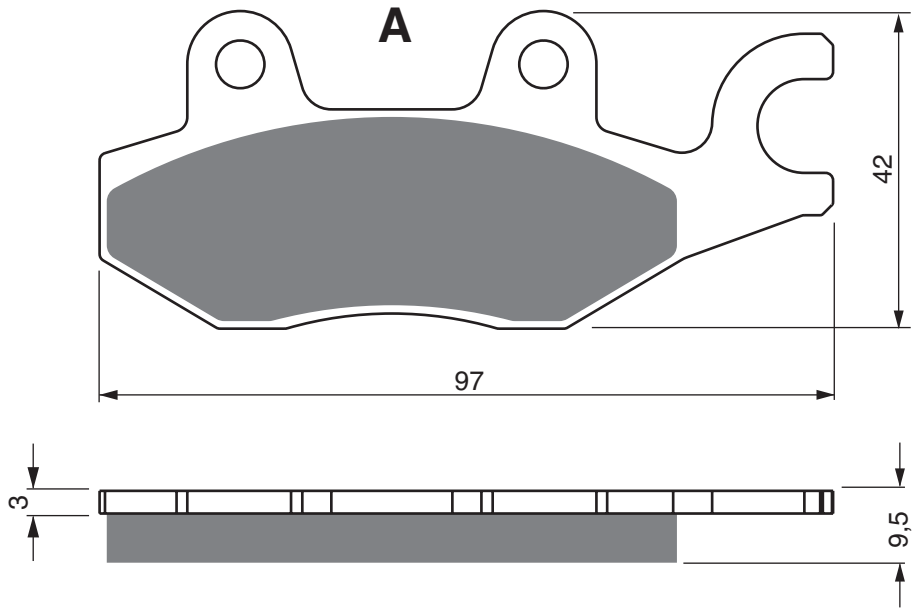

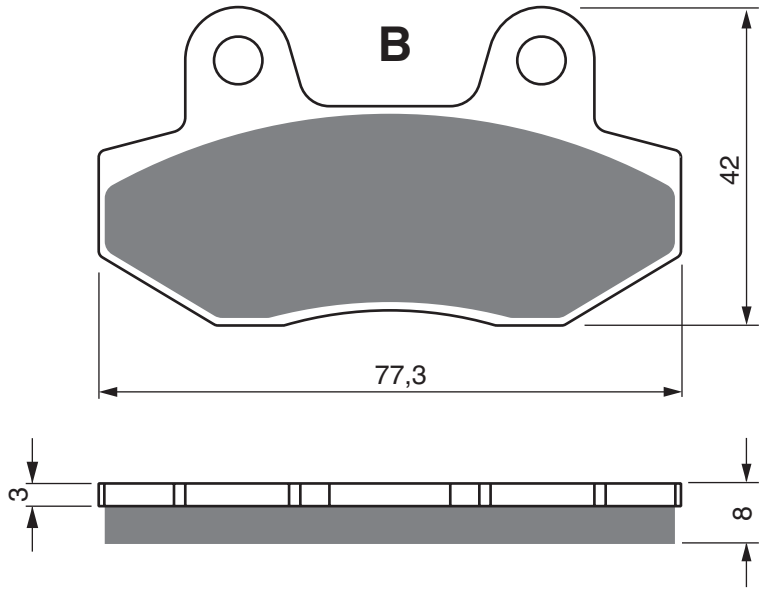

BOMBARDIER

	200	Rally	2005 - 2006	RR

CAGIVA

	500	Canyon	1996 - 2000	RR
	600	Canyon E	1996 - 1999	RR
E	900	Elefant Dakar Rep (300mm Front Disc)	1990 - 1990	RR
E	900	Elefant ie GT (296 Front Disc)	1991 - 1992	RR
E	900	ie Lucky Explorer (296mm Front Disc)	1990 - 1990	RR
IE	900	Canyon / Gran Canyon	1998 - 2000	RR
	1 000	Navigator	2000 - 2005	RR

HYOSUNG

XRX	125	Supermoto	2007 - 2011	RR

ITALJET

	50	Rollercraft	2008 - 2008	RR

KEEWAY

	100	Partner	2006 - 2006	FL
	125	Speed	2006 - 2007	RR
	150	Speed	2006 - 2006	RR

KYMCO

	50	New Dink	2008 - 2008	FL
	125	Joyride	2001 - 2001	RR
	125	New Dink	2008 - 2008	FL RR
	125	Techno GT	2006 - 2010	FL
	150	Dink	1997 - 2004	FL RR
	150	Joyride	2001 - 2001	RR
	150	Spacer	1997 - 1997	FL RR
	150	Yager	2001 - 2001	FL RR
	150	Zing	1999 - 1999	FL
	200	i New Dink	2008 - 2008	FL RR

PART NUMBER

088

AD	K1	K5	S3	S33 RACING

LONCIN

LX	110	4	2002 - 2002	FL
LX	125		2002 - 2002	FL
MZ				
VRT	125	Quad	2005 - 2005	RR
VRT	175	Quad	2005 - 2005	RR

SUZUKI

DR	800	SM/SN/SP/SR/SS (SR43B)	1991 - 1995	RR

TRIUMPH

		Sprint (All Carb Models) Up to VIN 9082	1993 - 1993	RR
		Sprint (All carb models from VIN 9083)	1994 - 1998	RR
		Sprint RS (up to VIN139276) (6 bolt front disc) (Double sided swing arm)	1999 - 2001	RR
		Sprint RS (From VIN139277) (6 bolt front Disc)	2002 - 2002	RR
	750	Daytona (3cyl)	1992 - 1992	RR
	750	Speed Triple (Carb Model)	1994 - 1996	RR
	750	Trident	1992 - 1998	RR
	855	Tiger (Carbs) (Up to VIN 71698)	1992 - 1997	RR
	900	Daytona Super III (3cyl)	1994 - 1997	RR
	900	Daytona (3cyl)	1993 - 1996	RR
	900	Speed Triple (Carb Model)	1994 - 1996	RR
	900	Trident	1992 - 1998	RR
	900	Trophy (3cyl) (up to VIN 9082)	1992 - 1993	RR
	900	Trophy (From VIN 9083)	1994 - 2001	RR
	955	Tiger 955 (Cast Wheel Model) From VIN 198875	2004 - 2006	RR
	1 000	Daytona	1992 - 1992	RR
	1 050	Tiger (Radial Caliper)	2007 - 2011	RR
	1 050	Tiger SE (ABS)	2010 - 2013	RR
	1 200	Bonneville Speed Twin (Liquid Cooled)	2019 - 2020	RR
	1 200	Daytona	1993 - 1998	RR
	1 200	Trophy (4cyl) (up to VIN 4901)	1992 - 1993	RR
	1 200	Trophy (4cyl) (From VIN 4902)	1994 - 2001	RR

VOXAN

	1 000	Scrambler	2006 - 2006	RR

EQUIVALENTS OEM

6910031820	3LD W0046 01	8000 66785	A45120 168 000	59312 HP7 600	59400 HP7 600	59401 HP7 600
T 2020560	T 2020561					

AD	K5	S3

PART NUMBER

089

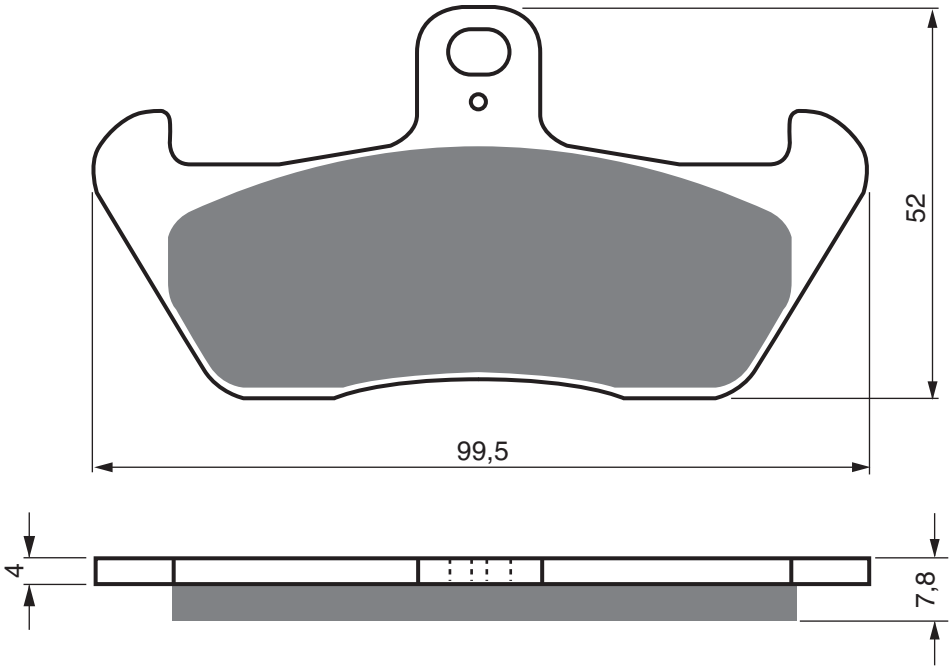

APRILIA				
	125	Tuareg Rally	1989 - 1989	FL
	600	Tuareg Wind	1989 - 1989	FL
CAGIVA				
	125	Elefant	1988 - 1990	FL
	125	Freccia SY	1989 - 1989	FL
	125	Mito	1991 - 1992	FL
	125	Supercity	1992 - 1992	FL
	125	Tamanaco	1988 - 1989	FL
W8	125		1996 - 1998	FL
W12	350		1992 - 1995	FL
W16	600		1994 - 1998	FL
	750	Elefant	1990 - 1992	RR
MOTO-GUZZI				
	1 000	Quota	1992 - 1997	RR

EQUIVALENTS OEM

8000 59214	000306546300	8113283	GU30654630

PART NUMBER

090

AD	S3	GP5	GP6	GP7

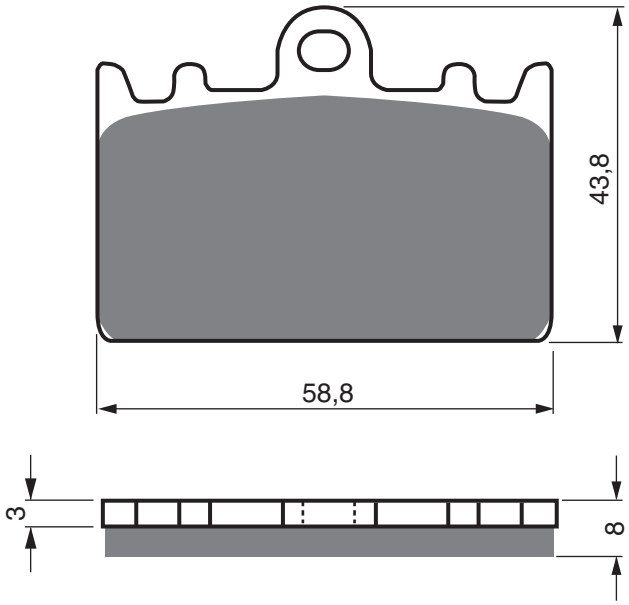

KAWASAKI

ZXR	400	(L1-L9)	1991 - 2003	FL	FR

PRE TECH

		4 Piston caliper (UNI P401)		FL	

SUZUKI

RGV	250	T (RGVR 250SP VJ 23A)	1996 - 1996	FL	FR

EQUIVALENTS OEM

43082 1130	59300 42840

AD | S3

PART NUMBER

091

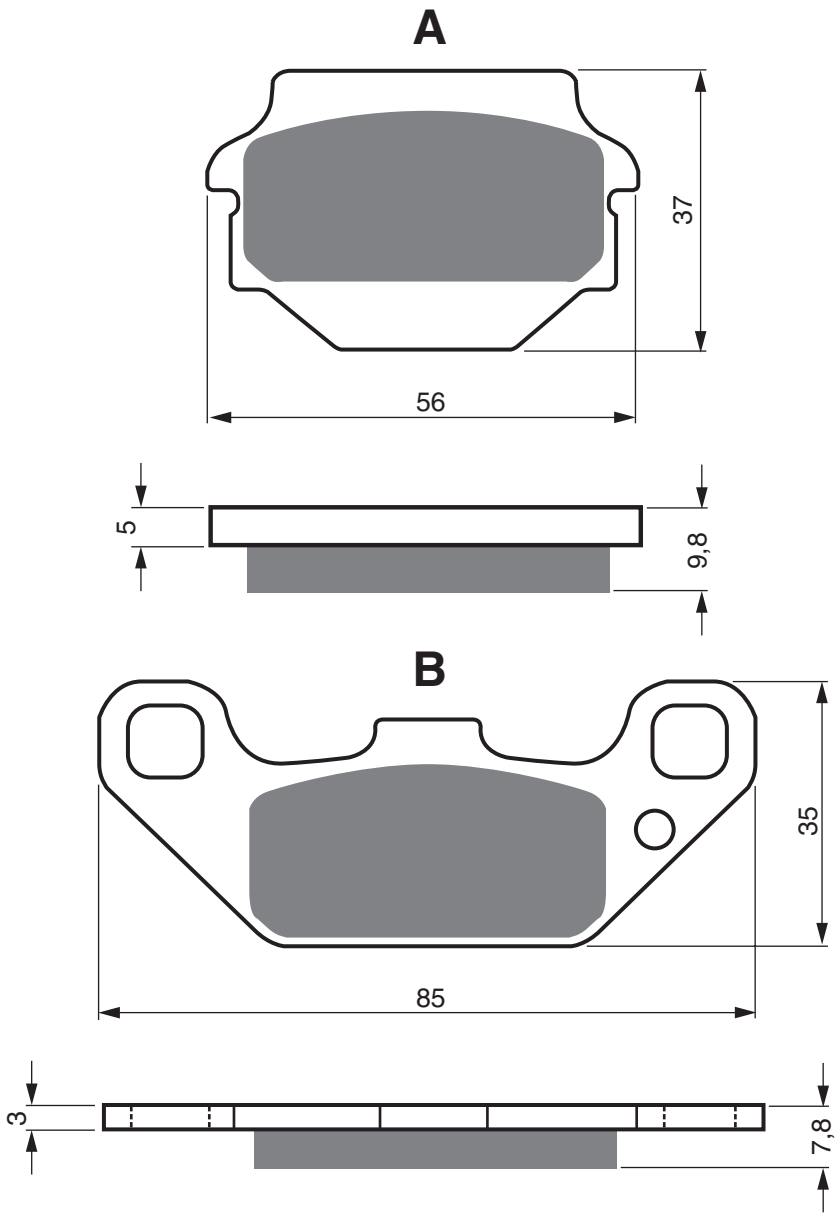

KAWASAKI					
KSF	250	A1-A18 (KFX 250 Mojave)	1987 - 2004	FL	FR
KXF	250	A1/A2 Tecate 4	1987 - 1988	FL	FR
KEF	300	B1/B2/B3 Lakota Sport	2001 - 2003	FL	FR
SUZUKI					
LT	230	SF-SJ	1985 - 1988	FL	FR
LT	250	RF-RH	1985 - 1987	FL	FR
LT	250	RH/RJ/RK/RL	1987 - 1990	FL	FR
LT	250	SK, SL	1989 - 1990	FL	FR
LT	500	RL	1990 - 1990	FL	FR

EQUIVALENTS OEM

43082 1067	59100 43810	59300 03840

PART NUMBER

092

AD	K1	K5	K5-LX	S3	S33 RACING

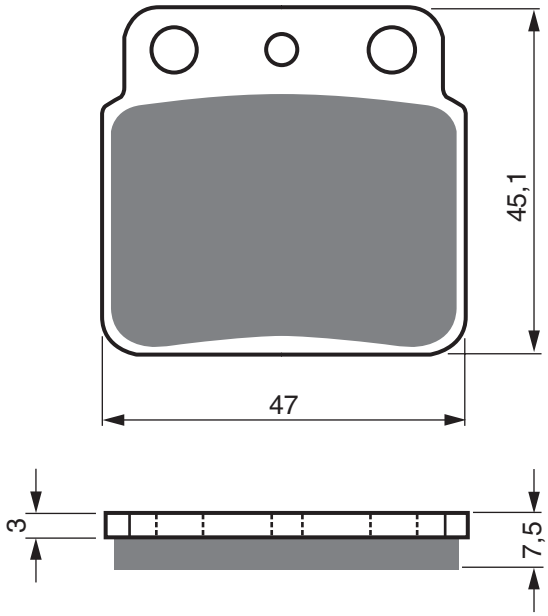

ARCTIC CAT

DVX	400	Sport (2x4)	2004 - 2008	RR
DVX	400	TS Sport	2006 - 2007	RR

HYOSUNG

TE	400		2005 - 2005	RR

KAWASAKI

KSF	400	A1/A2/A3/A6F (KFX400)	2003 - 2006	RR

SUZUKI

LT	250	RH/RJ/RK/RL	1987 - 1990	RR
LT-Z	400	K3/K4/K5/K6/K7/K8/K9/L0	2003 - 2010	RR
LT-Z	400	L1	2011 - 2012	RR
LT-R	450	K6/K7/K8/K9/L0/L1/L2/L3	2006 - 2013	RR
LT	500	RL	1990 - 1990	RR

EQUIVALENTS OEM

43082 S007	69100 07810	69140 35B00	69140 43B00	69140 43B10	3406-075	69100 01810

AD	S3	S33 RACING

PART NUMBER
093

A

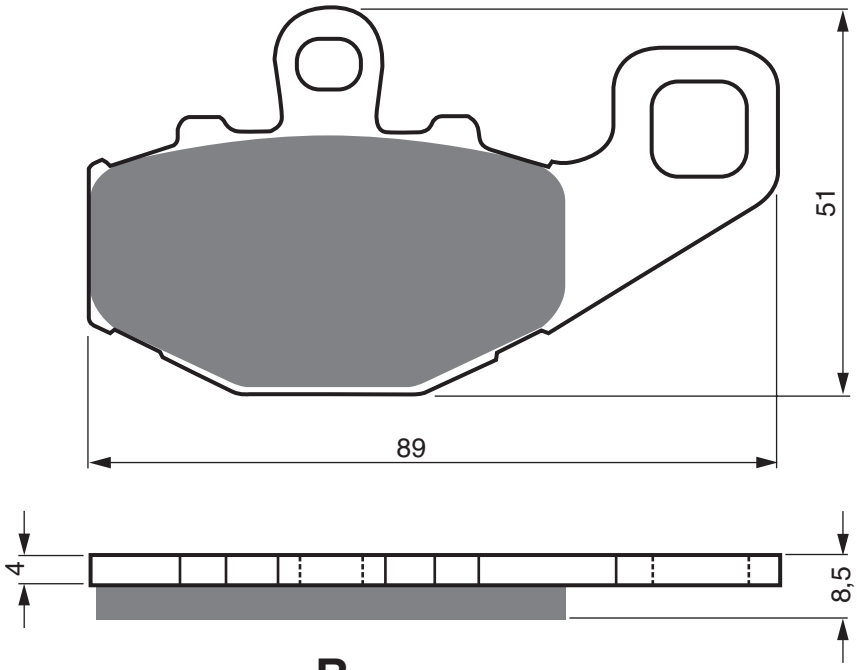

B

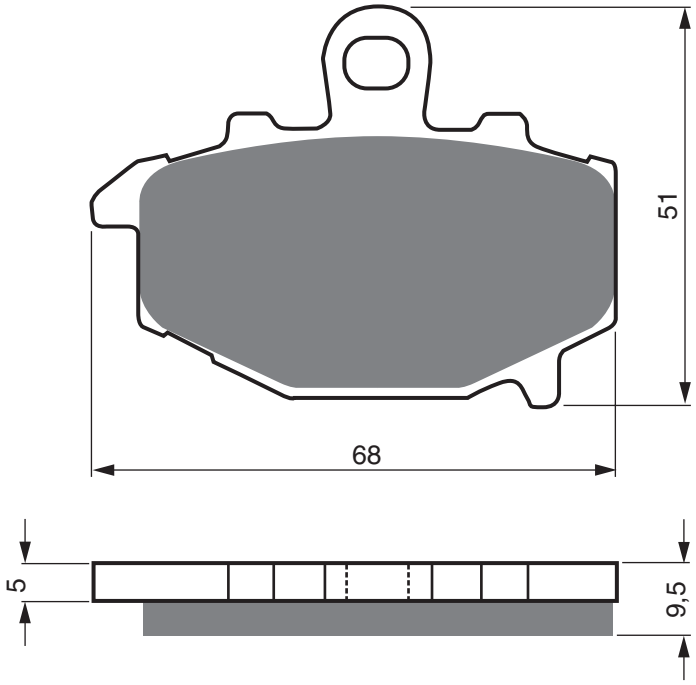

CF MOTO

	650	NK	2012 - 2015	RR
	650	TK	2013 - 2015	RR
	650	TR	2013 - 2014	RR

KAWASAKI

ZR	400	Zephyr (G2/G3/G4/G5)	1997 - 2001	RR
ZRX	400	(ZR 400 E1/E2)	1994 - 1995	RR
ZRX	400	(ZX 400 E4-E7)	1998 - 2001	RR
ZRX	400	E3 (ZR 400 E3)	1996 - 1996	RR
ZZ-R	400	(ZX 400 N1/N2/N3/N4/N5/N6/N7)	1993 - 1999	RR
ZR	550	B4/B5/B6 Zephyr	1994 - 1999	RR
ZX-6R	600	(ZX 600 G1/G2)	1998 - 1999	RR
ZX-6R	600	(ZX 600 J1/J2)	2000 - 2001	RR
ZX-6R	600	(ZX 600 P7F/P8F)	2007 - 2007	RR
ZX-6R	600	(ZX 600 R9F/RAF/RBF/RCF/RDF/REF/RFF/RGF 599cc)	2009 - 2016	RR
ZX-6R	600	(ZX600 F1-F3)	1995 - 1997	RR
ZX-6RR	600	(ZX 600 N1/N6F)	2005 - 2006	RR
ZX-6RR	600	(ZX600 K1/M1)	2003 - 2004	RR
ZZR	600	(ZX 600 E1-E13)	1993 - 2005	RR
ZZR	600	(ZX 600 E6F)	2006 - 2007	RR

PART NUMBER

093

AD | S3 | S33 RACING

ZX-6R	636	(ZX 636 A1P)	2002 - 2002	RR
ZX-6R	636	(ZX 636 B1/B2)	2003 - 2004	RR
ZX-6R	636	(ZX 636 C1/C6F)	2005 - 2006	RR
	650	(KLE CBF/CCF/CEF) Versys Non ABS	2012 - 2012	RR
ER-6F	650	(EX 650 A6F/A7F/A8F/C9F/CAF/CBF)	2006 - 2011	RR
ER-6F	650	(EX 650 B6F/B7F/B8F/D9F/DAF/DBF) ABS	2006 - 2011	RR
ER-6F	650	(EX 650 ECF/EDS/EEF/EFF/EGF) (Double pipe typeframe/Non ABS)	2012 - 2016	RR
ER-6F	650	(EX 650 FCF/FDS/FEF/FFF/FGF) Double pipe typerame/With ABS)	2012 - 2016	RR
ER-6N	650	(ER 650 B6F/B7F/B8F/D9F/DAF/DBF)	2006 - 2011	RR
ER-6N	650	(EX 650 A6F/A6F/A8F/C9F/CAF/CBF)	2006 - 2011	RR
ER-6N	650	(EX 650 ECF/EDF/EEF/EFF/EGF) (Non ABS)	2012 - 2016	RR
ER-6N	650	(FCF/FDF/FEF/FFF/FGF) ABS	2012 - 2016	RR
EX	650	R (EX 650 CBF)	2011 - 2014	RR
KLE	650	A7F/A8F/A9F/CAF/CBF/CCF/CDF/CEF Versys	2007 - 2014	RR
KLE	650	B7F/B8F/B9F/DAF/DBF/DCF/DDF/DEF Versys (ABS)	2007 - 2014	RR
Z	750	(ZR 750 J1/J2)	2004 - 2005	RR
Z	750	S (ZR 750 K1/K6F)	2005 - 2007	RR
ZX-9R	900	(ZX 900 B1/B2)	1994 - 1995	RR
ZX-9R	900	(ZX 900 B3/B4)	1996 - 1997	RR
ZX-9R	900	(ZX 900 C1/C2)	1998 - 1999	RR
ZX-9R	900	(ZX 900 E1/E2)	2000 - 2001	RR
ZX-9R	900	Ninja	2000 - 2001	RR
ZX-9R	900	Ninja (ZX900C/H884)	2002 - 2003	RR
ZX9R	900	(ZX 900 F1/F2)	2002 - 2004	RR
Z	1 000	(Rad.cal.)	2014 - 2014	RR
Z	1 000	(ZR1000 A1/A2/A3)	2003 - 2005	RR
Z	1 000	(ZR1000 DAF/DBF/DCF/DDF/FEF/FFF)	2010 - 2015	RR
Z	1 000	ABS (ZR1000 EAF/EBF/ECF/EDF/GEF/GFF)	2010 - 2015	RR
Z	1 000	Black Edition (ZR1000 DCFA/DDFA/FEFA)	2012 - 2015	RR
Z	1 000	DAF/DAS/DBF/DCF/DCFA/DDF/DDFA (Non ABS/300mm Discs)	2010 - 2013	RR
Z	1 000	EAF/EBF/ECF/ECFA/EDF/EDFA (ABS/300mm Discs)	2010 - 2013	RR
Z	1 000	FEF/FEFA/FFF/FGF (Non ABS/310mm Discs)	2014 - 2020	RR
Z	1 000	GEF/GEFA/GFF/GGF/HHF/HJF (ABS/310mm Round Discs)	2014 - 2021	RR
Z	1 000	JHF/JJF (310mm Round Discs) (ABS)	2017 - 2021	RR
Z	1 000	R JHF (310mm Round Discs) (ABS)	2017 - 2020	RR
Z	1 000	SE (Rad.cal.)	2014 - 2014	RR
Z	1 000	Special Edition (ZR 1000 GEFA)	2014 - 2014	RR
Z	1 000	SX (ZX 1000 HBF/HCF/HDF) (ABS)	2011 - 2013	RR
Z	1 000	SX (ZR 1000 GBF/GCF/GDF) (Non ABS)	2011 - 2013	RR
Z	1 000	SX (ZX 1000 LEF/LFF/LGF) (Non ABS)	2014 - 2016	RR
Z	1 000	SX ABS Model (ZX 1000 MEF/MFF/MGF/WHF/WJF)	2014 - 2018	RR
Z	1 000	SX Tourer	2014 - 2014	RR
ZX-10R	1 000	(ZX 1000 C1/C2/D6F/D7F)	2004 - 2007	RR
ZX-10R	1 000	(ZX 1000 E8F/E9F/FAF)	2008 - 2010	RR
ZX-10R	1 000	Ninja (Rad.cal.)	2010 - 2011	RR
GPZ	1 100	ABS Horizont (ZXT10F/G936)	1997 - 1998	RR
GPZ	1 100	E1/E2/F1	1995 - 1998	RR
ZR	1 100	Zephyr (ZRT1100B/F989)	1997 - 1997	RR
W.K.BIKES				
	650	i (Naked)	2013 - 2015	RR
	650	TR (Touring)	2013 - 2015	RR

EQUIVALENTS OEM

43082 0111	43082 1148	43082 1157	43082 1160	43082 1171	43082 1213	43082 0004
A000-0802BO	43082 0167	43082 0119				

AD	K1	K5	S3

PART NUMBER

094

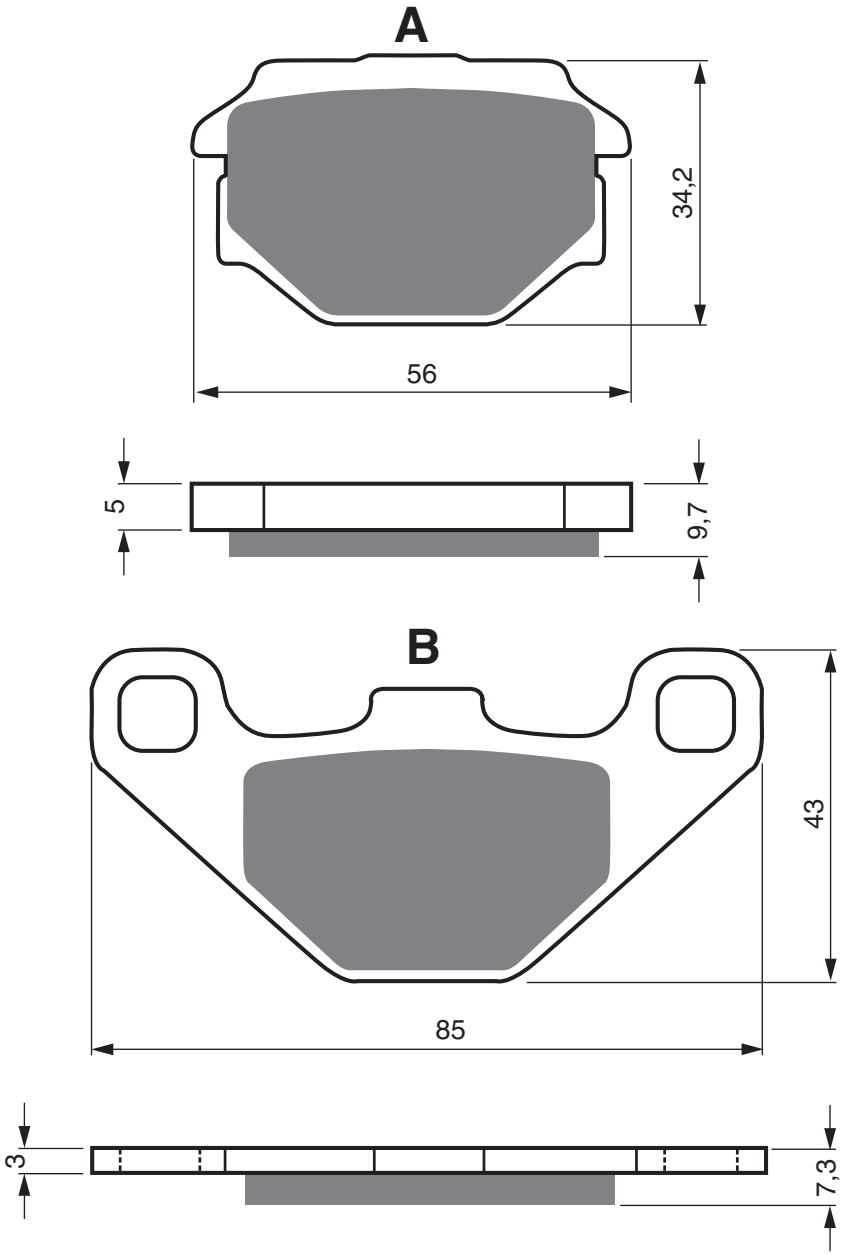

APRILIA

	125	Pegaso	1991 - 1991	RR
	125	Pegaso KAT	1994 - 1995	RR
	125	Tuareg Rally	1989 - 1989	RR
	125	Tuareg Rally (L/M)	1990 - 1991	RR
ETX	125		1999 - 2001	RR
RX	125		1992 - 1999	RR
RX	125		2000 - 2001	RR
	600	Pegaso	1991 - 1991	RR
	600	Tuareg Wind	1989 - 1989	RR
	650	Moto 6.5	1995 - 2001	RR
	650	Pegaso	1991 - 1996	RR
	650	Pegaso	1997 - 2000	RR

BETA

	125	Jonathan	2002 - 2005	RR
	350	Euro	2002 - 2002	RR

CAGIVA

W12	350		1992 - 1995	RR
W16	600		1994 - 1998	RR

FANTIC

	50	Caballero Regolarita Casa	2006 - 2009	RR
	50	Caballero Supersei Motard	2006 - 2009	RR
	50	Grinta	1995 - 2000	RR
	50	Leader	1995 - 1995	RR
	125	Caballero Regolarita Casa	2007 - 2008	RR
	125	Caballero Supersei Motard	2007 - 2009	RR

PART NUMBER

094

AD	K1	K5	S3

GILERA

	50	Eaglet	1996 - 1996	RR	
RC	50	Top Rally	1990 - 1990	FL	RR

HM

CRE	50	Six/Baja/Derapage (Brembo Caliper / Kayaba Forks)	1995 - 2002	RR	
CRE	50	Six/Baja/Derapage (Grimeca caliper)	1995 - 2002	FL	RR
CRE	50	Six/Baja/Derapage Brembo caliper / 41mm Paioli Forks	1995 - 2002	RR	

KRAM-IT

	50	Scrambler	-	RR	
MC	250		1989 - 1989	RR	
ER	300		1989 - 1989	RR	

MALAGUTI

F10	50	Jetline	1991 - 1993	FL	

MBK

	50	X-Limit	2002 - 2003	RR	

MZ

	660	(MUZ)Supermotard	2006 - 2007	RR	
	660	Baghira 21" FW / Spoke Wheel	1999 - 2005	RR	
	660	Baghira Black Panther (17" FW / Spoke Wheel)	1996 - 2003	RR	
	660	Baghira Forest / Forest HR (21" FW / Spoke Wheel)	1996 - 2005	RR	
	660	Mastiff (21" FW / Spoke Wheel)	1996 - 2005	RR	

PEUGEOT

SV	50	Roland Garros (F052DE/G282/0)	1993 - 1993	FL	
SV	50	Sport (F052DE/G281/0)	1993 - 1993	FL	

SACHS

XTC	125	Supersport	2000 - 2007	RR	
	800	Roadster	2001 - 2005	RR	

SIMSON

	125		2001 - 2001	RR	
	125	RS	2001 - 2001	RR	

YAMAHA

TDR	125	(3HS1/3XDO/3HS3/3XD01)	1989 - 1993	RR	

EQUIVALENTS OEM

34 11 2 310 494	8113595	8000 68794	11940100	902203100	3SH F5811 00	5VB W0045 00
5VB W0045 00	8113375	KA3497506				

AD | S3

PART NUMBER

095

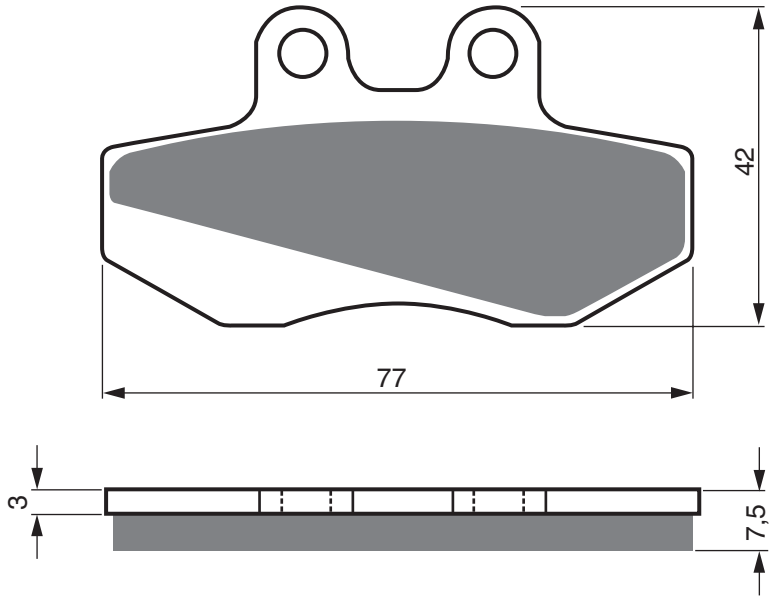

AJP					
PR4	125	Enduro	2004 - 2009	FL	
PR4	125	Supermoto	2004 - 2009	FL	
PR4	200	Enduro	2004 - 2009	FL	
PR4	200	Supermoto	2004 - 2009	FL	
APRILIA					
RX3-5	50	Marce (M/N/P/R)	1991 - 1994	FL	
	125	Classic	1995 - 2001	FL	
	125	Pegaso	1991 - 1991	FL	
	125	Tuareg Rally (N)	- 1993	FL	
	600	Pegaso	1991 - 1991	FL	
BETA					
RK6			1993 - 1996	FL	
RK6	50	Enduro	1997 - 2002	FL	
BULTACO					
	50	Lobito	1999 - 1999	FL	
SM	50	Astro		FL	
CH RACING					
WSM	50	Motard	2005 - 2005	FL	
WXE	50	Enduro	2005 - 2005	FL	
WSM	125	Motard	2005 - 2005	FL	
WXE	125	Enduro	2005 - 2005	FL	

DERBI					
	50	Senda Black Edition	2003 - 2003	FL	
DRD	50	Senda SM (Double Disc Model) SDR1DB	2002 - 2003	FL	FR
DRD	50	Senda SM Black Edition	2003 - 2003	FL	
GPR	50	R (218mm R/Disc)	1997 - 2001	FL	
GPR	50	Replica Racing (218mm R/Disc)	1999 - 2003	FL	
	125	Senda R VIN # SCB1A	2004 - 2004	FL	
EXPLORER					
KBR	200		2005 - 2005	FL	
GAS GAS					
EC	50	Rookie	2001 - 2004	FL	
SM	50	Rookie	2001 - 2004	FL	
GOES					
G	50	X	2008 - 2009	FL	RR
HRD					
	50	Sonic 2 Supermotard		FL	
	50	Sonic 2 Trail		FL	
	125	Cabriolet	2001 - 2001	FL	
	125	Cabriolet Supermotard		FL	
	125	Cabriolet Trail		FL	

PART NUMBER

095

AD | S3

HUSQVARNA

SM	50		2002 - 2002	FL
WR	50		2002 - 2002	FL
WXE	125		2007 - 2007	FL

MOTO-ROMA

SMX	125		2004 - 2006	FL

MOTORHISPANIA

RX	50	Super Racing	2006 - 2007	FL
RYZ	50		2003 - 2003	FL
RYZ	50	Pro Racing Enduro	2006 - 2010	FL
RYZ	50	SN	2004 - 2004	FL
RYZ	50	Urban Bike	2006 - 2010	FL
XPS-6	50	Supermotard	2004 - 2004	FL
	125	Arena Pro Racing Urban bike	2006 - 2006	FL
RYZ	125	Arena Pro Racing Supermotard	2006 - 2006	FL

PEUGEOT

XR6	50	(2T)	2003 - 2007	FL
XP	125	Street Evo 2	2005 - 2005	FL

RIEJU

MRX	50	Castrol	2001 - 2002	FL
RR	50	Castrol	2000 - 2002	FL
RS1	50		2001 - 2004	FL
SMX	50		2001 - 2002	FL
MRX	125		2002 - 2008	FL
SMX	125		2002 - 2007	FL

SACHS

	125	Roadster	2000 - 2003	FL

SHERCO

EN	50	Enduro (50 EN)	2003 - 2007	FL
SM	50	Supermotard	2003 - 2007	FL
	125	City Corp (All Models)	2003 - 2007	FL
SM	125		2003 - 2006	FL

SIAMOTO

BD	125		2002 - 2002	FL

SIMSON

	125	SM	2001 - 2001	FL

TOMOS

SE	50		2005 - 2005	FL
SE	125	F	2005 - 2008	FL

EQUIVALENTS OEM

8113373	8113478	8113604	P00 927 020 64 07 000	214 007 1000002	00009300065	00RTS01A0015
2525230000	R351	00H04702141				

AD	K5	S3

PART NUMBER

096

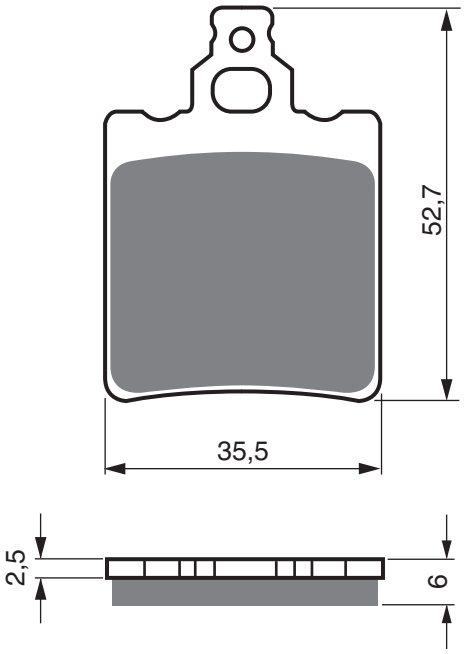

APRILIA

	50	Europa	1990 - 1992	RR	
	50	Tuono	2004 - 2004	RR	
AF1	50	Futura	1990 - 1992	RR	
MX	50		2003 - 2005	RR	
RS	50	(5 bolt fixing front & rear)	1999 - 2005	RR	
RS	50	(6 Bolt Fixing Front & Rear)	1993 - 1998	RR	
RX	50	C/CD	1995 - 2004	RR	
RX	50	Racing	2004 - 2006	RR	
RX3-5	50	Marce (M/N/P/R)	1991 - 1994	RR	

CAGIVA

W4	50		1991 - 1995	RR	
	125	Cruiser	1987 - 1987	RR	
	125	Elefant	1988 - 1990	RR	
	125	Tamanaco	1988 - 1989	RR	
SXT	125		2002 - 2002	FL	
W8	125		1993 - 1995	RR	
W8	125		1996 - 1998	RR	
WSTX	125	Aletta Rossa	1983 - 1984	FL	
XSST	125		1981 - 1982	FL	

FANTIC

	50	50.1 Oasis	1986 - 1986	RR	
	50	Koala	1990 - 1990	FL	
	50	Koala	1990 - 1990	RR	
	50	Oasis E.S.	1987 - 1987	RR	
RC	50	Caballero	1991 - 1991	RR	
RS	50	Caballero	1991 - 1991	RR	
	80	Caballero	1991 - 1991	RR	
	80	Caballero RC	1991 - 1991	RR	
	80	Kaloa		FL	RR
	125	Raider		FL	
HP1	125	Sport	1987 - 1987	FL	FR

GARELLI

	125	Tiger XLE	1986 - 1986	RR	
GTA	125		1986 - 1986	FL	
GTA	125		1986 - 1986	RR	

GENERIC

	50	Toxic	2007 - 2008	RR	
	50	Trigger SM (All models)	2006 - 2018	RR	
	50	Trigger X (All Models)	2006 - 2018	RR	
	125	Trigger SM	2008 - 2009	RR	
	125	Trigger X	2008 - 2009	RR	
GRS	125		2013 - 2016	RR	
SM	125		2013 - 2016	RR	
TW	125	SM	2013 - 2015	RR	

GILERA

RV	50	NGR	1988 - 1988	FL	
NGR	250		1985 - 1985	FL	FR

JCM

	233	Vega	1988 - 1988	RR	
	333	Vega	1988 - 1988	RR	

KEEWAY

TX	50		2010 - 2012	RR	
X RAY	50	Supermoto	2007 - 2009	RR	
X-WAY	50	Supermoto	2006 - 2006	FL	
TX	125		2010 - 2012	RR	

LAVERDA

	125	Formula	1986 - 1986	FL	
GS	125	Lesmo	1990 - 1990	FL	RR
LB	125	Custom/Sarbia/strada Sport	1985 - 1987	FL	

MALAGUTI

ES	50	Dune	1989 - 1989	FL	RR
MXR	50		1989 - 1989	FL	

MALANCA

		ob one M6	1985 - 1985	FL	FR	RR
		ob one M6 Racing	1985 - 1985	FL	FR	RR
E2		125		FL	FR	RR
GTI	80			FL	FR	RR
	125	Mark Enduro	1985 - 1985	FL		

MOTO-GUZZI

	250	(All Models)	1975 - 1975	FL	

ZÜNDAPP

KS	80	Super	1980 - 1980	FL	

EQUIVALENTS OEM

8113104	8000 33545	8000 37009	8000 40413	8213051	8213104	238 076570
245 07 6340	326 478	8000 40413				

PART NUMBER

097

AD | S3

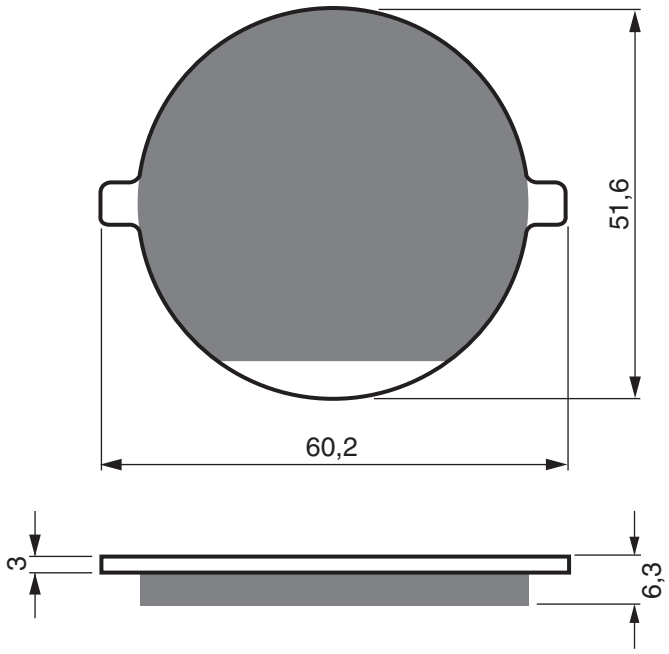

JAWA

	All Disc Models		FL
125	Chopper	2003 - 2004	FL
350	Californian	2003 - 2004	FL
350	Chopper	2003 - 2004	FL
350	Classic	2003 - 2004	FL
350	Tramp	2003 - 2004	FL

EQUIVALENTS OEM

639 41 054

AD	S3	S33 RACING

PART NUMBER

098

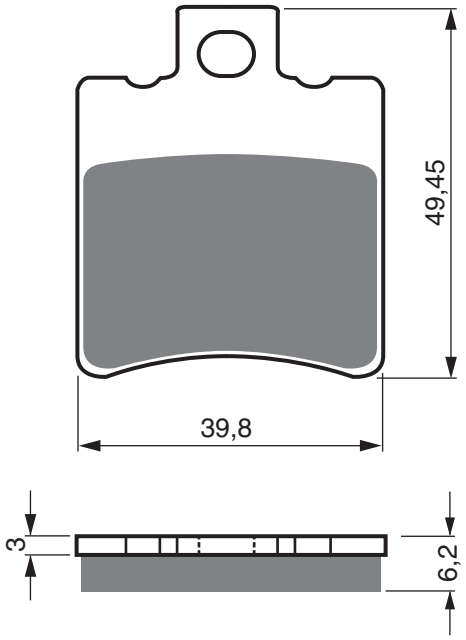

AJP						
PR3	125	Supermoto Pro	2010 - 2011	FL		
APRILIA						
		Amico (All Models)	1996 - 1998	FL		
		Gulliver (All Models)	1995 - 1998	FL		
		Rally A/C (All Models)	1995 - 2002	FL		
		Rally L/C (All Models)	1996 - 2000	FL	FR	RR
		Sonic (All Models)	1998 - 2008	FL		
	50	Area 51	1998 - 2002	FL	RR	
	50	Gulliver (All models)	1995 - 1998	FL		
	50	Habana/Habana Custom	1999 - 2002	FL		
	50	Mojito Custom (110mm Ø rear drum)	2004 - 2012	FL		
	50	Mojito Custom (120mm Ø rear drum)	1999 - 2003	FL		
	50	Mojito Retro (120mm Ø rear drum)	1999 - 2003	FL		
	50	Rally (All Models) A/C	1995 - 2002	FL		
	50	Rally (All Models) L/C	1996 - 2000	FL		
	50	Scarabeo (2T) (H2/HL) Front disc Model	1993 - 1997	FL		
	50	Scarabeo (2T) (PF0100) (Rear Drum Model)	1998 - 1999	FL		
	50	Scarabeo (2T) (Rear disc model) (PFG00/TH000)	2000 - 2005	FL	RR	
	50	Scarabeo (2T) Rear Disc Model) (PF0100)	1998 - 1999	FL		
	50	Scarabeo (4T) (TG000)	2002 - 2006	FL		
	50	Scarabeo (4T) (TGA00/TGB00)	2006 - 2009	FL		
	50	Scarabeo Ditech (2T) (SCA00)	2002 - 2006	FL		
	50	Scarabeo Street (2T) (TH00/THE00)	2005 - 2009	FL		
	50	Sonic (All Models)	1998 - 2008	FL		
	50	Scarabeo (2T) (Rear drum model) (PFG00/TH000)	2000 - 2005	FL		
SR	50	(LC)	1994 - 1996	FL		
SR	50	A/C (GP/LB/LF)	1993 - 1996	FL		
SR	50	Ditech (LC)(RLD100)	2002 - 2003	FL		
SR	50	H20 (Ditech) (RLA1/RLB1)	2000 - 2003	FL		
SR	50	R Factory (LC/2T)(VFB00/VFD00)	2004 - 2018	FL		
SR	50	R SBK Alitalia (Replica) (LC)	2010 - 2011	FL		
SR	50	Stealth/Racing (LC) (MZC0)	1997 - 1999	FL	RR	
SR	50	Street (LC/2T) (TE00/TEA00)	2003 - 2015	FL		
SR	50	WWW (A/C) (LYH100)	1997 - 2001	FL		
	125	Leonardo	1996 - 1998	FL	RR	
	150	Leonardo	1997 - 1998	FL		

ATALA						
		Hacker	1997 - 1997	FL		
		Hacker LC	1997 - 1997	FL		
		Hacker Racing	1997 - 1997	FL		
AT10	50	Byte	1997 - 2000	FL		
BENELLI						
491		All rear drum models	1998 - 2004	FL		
491		Scooter (all rear disc models)	1999 - 2004	FL	RR	
	50	Mala (2T)	2013 - 2013	FL		
	50	Naked	2002 - 2003	FL		
	50	Pepe (4T) (7 spoke cast wheels)	2012 - 2016	FL		
	50	Pepe (2T) (7 spoke cast wheels)	1999 - 2001	FL		
	50	Pepe (5 spoke cast wheel) (2T)	2010 - 2014	FL		
	50	Pepe Classic (7 spoke cast wheels) (2T)	2007 - 2014	FL		
	50	Pepe LX (7 spoke cast wheels) (2T)	2003 - 2009	FL		
K2	50	Scooter	1998 - 2001	FL	RR	
	100	Naked	2002 - 2002	FL		
	100	Pepe LX	1999 - 2002	FL		
K2	100		1999 - 2001	FL		
	125	Adiva	2001 - 2004	FL		
	125	Velvet	1999 - 2007	FL	RR	
	150	Adiva	2001 - 2004	FL		
	150	Velvet	1999 - 2007	FL	RR	
BETA						
	50	Ark (A/C Models)	1996 - 2014	FL		
	50	Ark (LC Models)	1997 - 2014	FL	RR	
	50	Quadra	1997 - 2002	FL		
	50	Tempo	1998 - 2002	FL		
CAGIVA						
	50	Nuvola	2000 - 2000	FL		
	125	Nuvola	2000 - 2000	FL		
GARELLI						
	50	FLO		FL		
	250	Skynet	2002 - 2002	RR		
	400	Skynet	2002 - 2002	RR		
GENERIC						
	50	Onyx (2T/4T)	2010 - 2018	FL		
	50	Pandora (2T/4T)	2013 - 2018	FL		

PART NUMBER

098

AD | S3 | S33 RACING

GILERA

	50	DD/SP Runner SP/Pujeret	1999 - 2004	FL	
	50	Easy Moving	1995 - 1996	FL	
	50	Ice	2001 - 2003	FL	
	50	Runner	1998 - 1998	FL	
	50	Stalker	1997 - 2006	FL	
	50	Storm	1994 - 1995	FL	
SKP	50		1999 - 2001	FL	
	125	Typhoon	1995 - 1998	FL	
	125	Typhoon X-XR	1999 - 2000	FL	

GOCCIA (ELECTRIC SCOOTERS)

GO		T 1-4	2013 - 2014	FL	

GOVECS (ELECTRIC SCOOTERS)

GO		S 1-2	2011 - 2014	FL	
GO		S 1-4	2011 - 2014	FL	
GO		S 2-4	2011 - 2014	FL	
GO		S 3-4	2011 - 2014	FL	
GO		T 1-2	2011 - 2014	FL	
GO		T 2-4	2011 - 2014	FL	
GO		T 3-4	2011 - 2014	FL	

HERCULES

	50	Gipsy	1995 - 1995	FL	

HONDA

SFX	50	S/T/V/W/X/Y/1	1996 - 2004	FL	
SGX	50	V/W/X/Y/1 Sky/Sky Deluxe	1997 - 2003	FL	
SH	50	T Fifty/Scoopy W/X/Y/1	1997 - 2003	FL	
SRX	50	W/SW/X/SX	1998 - 1999	FL	
SZX	50	(X8R-S) SW/SX/SY/S1 "Supersport Scooter"	1998 - 2004	FL	
SZX	50	(X8R-X) XW/XX/XY/X1 "Cross Sport Scooter"	1998 - 2004	FL	
SH	100	T/W/X/Y/1 Scoopy	1996 - 2001	FL	

HYOSUNG

	125	Hyper	1999 - 1999	FL	

ITALJET

	50	Formula	1998 - 2000	FL	
	50	Formula	1998 - 2000	RR	
	80	Formula	1994 - 1994	RR	
	125	Formula (FR50/H088)	1994 - 1994	RR	

KEEWAY

	50	Goccia (2T/4T)	2008 - 2015	FL	

MACAL

	50	Flash	1999 - 1999	FL	

MALAGUTI

		Ciak (Electrical power)	2000 - 2005	FL	
F10		Jetline WAP	2006 - 2010	FL	
F10		Tribal	2008 - 2010	FL	
F12		Phantom (A/C)	2002 - 2008	FL	
	50	Ciak	2000 - 2004	FL	
	50	Ciak (4T) Master	2004 - 2008	FL	
	50	Ciak Twin Disc	2000 - 2003	FL	RR
F10	50	Jetline	1994 - 1997	FL	
F10	50	Timermachine	2003 - 2007	FL	
F12	50	Phantom	1998 - 2002	RR	
F12R	50	Phantom A/C	2007 - 2011	FL	
F12R	50	Phantom L/C	2007 - 2011	FL	RR
F15	50	Firefox (Air Cooled Models)	1999 - 2008	FL	RR
F15	50	Firefox (Liquid Cooled Models)	2001 - 2008	FL	RR
F15	50	RR	1999 - 2001	RR	
F69	70	Phantom	1998 - 1998	FL	
	100	Ciak	2000 - 2004	FL	RR
F12	100	Phantom (All liquid cooled models)	1999 - 2007	FL	RR
F18	150	Warrior	2000 - 2003	FL	

MBK

CS	50	Mach G AC (Air Cooled)	2002 - 2010	FL	
CS	50	Mach G LC (Liquid Cooled)	2003 - 2010	FL	
CW	50	Booster (10"wheels)	2009 - 2010	FL	
CW	50	Booster (12"wheels)	2006 - 2010	FL	
CW	50	Booster Naked (10" wheels)	2006 - 2010	FL	
CW	50	Booster R Road	1994 - 1995	FL	
CW	50	Booster Spirit	1996 - 1998	FL	
CW	50	Booster Spirit	1999 - 2006	FL	
CW	50	Evolis	1997 - 1997	FL	
CW	50	Fizz	1993 - 1997	FL	
CW	50	Naked Booster (12"wheels)	2009 - 2010	FL	
CW	50	Power Rocket	2006 - 2006	FL	
CW	50	RS Booster Naked	2004 - 2008	FL	
CW	50	RS Booster NG	1995 - 1998	FL	
CW	50	RS Booster NG	2001 - 2006	FL	
CW	50	RS Booster Spirit	1999 - 2006	FL	
CW	50	RSP Rocket	1997 - 2000	FL	
CW	50	RSX Booster Track	1996 - 1998	FL	
YA	50	R Forte	1994 - 1995	FL	
YE	50	Evolis	1992 - 1995	FL	
YH	50	Flipper	1998 - 2010	FL	
YM	50	Fizz	1994 - 1995	FL	
YN	50	Ovetto (4T)	2009 - 2010	FL	
YN	50	R Ovetto (2T)	1998 - 2010	FL	
YQ	50	Nitro	1997 - 2010	FL	
YQ	50	Nitro Naked	2006 - 2010	FL	
CV	80	Evolis	1997 - 1997	FL	
YN	100	Ovetto	1999 - 2003	FL	
YQ	100	Nitro	2001 - 2002	FL	
XN	125	/150 Doo Do	2000 - 2005	FL	

MOTRON

	50	Spike	1997 - 1997	FL	
	50	Sting	1998 - 1998	FL	
	50	Syncro	1998 - 1998	FL	
	50	Thunder	1998 - 1998	FL	

PEUGEOT

	50	Buxy/Buxy RS	1994 - 1997	FL	
	50	Ludix Pro (4T/14" wheels/J.Juan Caliper)	2011 - 2013	FL	
	50	Zenith L (All Models)	1996 - 1999	FL	

PGO

	50	Rodo Show	2000 - 2009	FL	

PIAGGIO VESPA

	50	Free	2002 - 2002	FL	
	50	Typhoon	1994 - 2000	FL	
	50	Typhoon (2T) (Heng Tong caliper/10" wheels)	2001 - 2009	FL	
	50	Typhoon (2T) Grimeca Caliper / 10" Wheels	2000 - 2004	FL	
NRG	50	(DD/DT) "MC2" (Rear Drum Models)	1998 - 1998	FL	
NRG	50	Extreme (Rear Disc Models)	1999 - 2001	FL	
NRG	50	Extreme (Rear Drum Models)	1999 - 2001	FL	
NRG	50	MC3 DD	2001 - 2005	FL	
NRG	50	RST "MC" (Rear Drum Models)	1996 - 1997	FL	
NRG	50	RST "MC2" (Rear Disc Models)	1998 - 1998	FL	
Zip	50	Base (Disc Model)	1995 - 1996	FL	
ZIP	50	Elettrico	2002 - 2002	FL	
ZIP	50	Fast Rider	1993 - 1997	FL	
	100	Free	2002 - 2002	FL	
	125	Hexagon	1994 - 1995	FL	
	125	Typhoon	1999 - 2003	FL	
	150	Hexagon	1994 - 1997	FL	

PROTOS

	50	Ellisse Scootercar	1998 - 1998	FL	

QUADRO

	350	4	2014 - 2015	FL	FR
	350	D	2011 - 2015	FL	FR
	350	S	2013 - 2015	FL	FR

AD | S3 | S33 RACING

PART NUMBER

098

RIEJU

RS	50	NKD (Scooter)	2013 - 2020	RR
RS	50	Sport (Scooter)	2012 - 2020	RR

SIAM

	50	Falcon	1997 - 1997	FL
	50	Scross	1997 - 1997	FL

SUZUKI

AP	50	R/S/T/V/W	1996 - 2002	FL
AY	50	V/WV/W/WW/WRW/WRX/WX/WRY/WRJ1/WRJ2/ WRJ3/WRJ4/K1/K2/K3 Katana (Grimeca Caliper)	1997 - 2004	FL
UX	50	WX/WY Zillion	1999 - 2002	FL

YAMAHA

BW	50	Bump	1997 - 1997	FL
BW	50	Next Generation (4BXM/G370)	1996 - 1996	FL
BW	50	Spy	1995 - 1995	FL
BW'S	50	(5WW1)	2004 - 2004	FL
BW'S	50	(5WW4/6/8/9/B/D/F/H/K/M/P)	2005 - 2015	FL
BW'S	50	Naked (1D11/2B71)	2003 - 2004	FL
BW'S	50	Naked (2B7B/D/F/H)	2009 - 2015	FL
BW'S	50	Next Generation (Twin Headlight Model) (190mm disc)	1999 - 2007	FL
BW'S	50	Original (180mm Disc)	1999 - 2002	FL
BW'S	50	R (5SX1)	2001 - 2001	FL
CS	50	Jog R	2006 - 2015	FL
CS	50	Jog RR	2003 - 2003	FL
CS	50	P/R Jog R	2002 - 2005	FL
CS	50	Z (Jog RR)	2006 - 2012	FL
CW	50	(5FXJ/VG5SA BW'S) (190mm Front Disc)	2000 - 2000	FL
CW	50	(5MS2/4G54R)	2002 - 2002	FL
CW	50	(5WW4/BWS)	2004 - 2007	FL
CW	50	NG Bi-Wizz	1999 - 1999	FL
CW	50	RS (4YA1/2/BW's) (180mm front disc)	1996 - 1997	FL
CW	50	RS (5FXA/VGSA BW'S) (190mm Front Disc)	1999 - 1999	FL
CW	50	RS (5FXM/VG5SA BWS)(190mm front disc)	2001 - 2005	FL
CW	50	RSP (5CC1/3/4YA BW's Spy) (180mm front disc)	1997 - 1998	FL
NS	50	Aerox (2T)	2013 - 2016	FL
NS	50	F Aerox 4	2014 - 2018	FL
NS	50	N Aerox Naked (2T)	2013 - 2016	FL
YA	50	Axis (4PC)	1995 - 1996	FL
YE	50	Zest	1993 - 1995	FL
YFM	50	Breeze (4KH)	1994 - 1995	FL
YH	50	Why	1999 - 2009	FL
YN	50	Neo's (5C21)	2007 - 2016	FL
YN	50	Neos (2T) (F5C2/IH5C2)	2007 - 2016	FL
YN	50	Neos (4T) (5C3)	2009 - 2018	FL
YN	50	Neos (5RN/1P9)	2002 - 2006	FL
YN	50	R Neos (5AD/5MR/5RN3)	1997 - 2002	FL
YQ	50	Aerox R / Aerox	1997 - 2016	FL
YN	100	Neos	2000 - 2003	FL
YQ	100	Aerox	2000 - 2004	FL
XN	125	Teos	2001 - 2003	FL

EQUIVALENTS OEM

119 439 00	119 468 00	119 502 00	2525370000	2525240000	59300 09820	59300 35810
59330 09EF0	59330 35E00	06455 GBM 750	06455 GCM 900	06455 GBY 910	3YK W0045 01	4CU F5811 20
4CU W0045 00	4VV F5811 00	5ME FS811 00	5MF F5811 00	5RW FS811 00	811 3638	811 3644
811 3663	821 3192	821 3245	821 3246	498408	R434 2009 1A0	R434 2021 1A0
R444 2004 1A0	752667	498454	821 3223	821 3571	821 3590	821 3638
647172	45120 J4A T000	PE 759057	1PH F5806 00	QCA 0648860000	5ME F5919 00	1PH F5805 00

PART NUMBER

099

AD	S3	S33 RACING	GP5	GP6	GP7

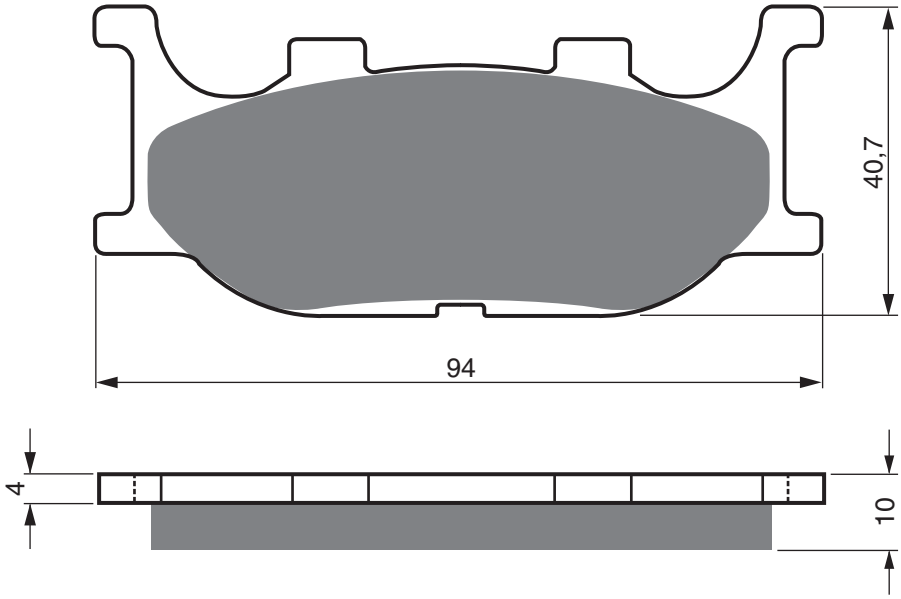

ADIVA SCOOTERS

AD	125		2009 - 2011	RR
AR	125		2010 - 2011	RR
AD	200		2009 - 2011	RR
AR	200		2010 - 2011	RR

BAOXIN

BX	125	L	1997 - 1997	FL

ITALJET

	150	/150 Jupiter	2002 - 2002	FL
	250	Jupiter	2002 - 2003	FL

JIANSHE

JS	125	3	2002 - 2002	FL

JINCHENG

JC	150	T-D	2006 - 2006	FL

KEEWAY

	250	Supershadow	2006 - 2006	FL

LINHAI

	125	/150 Monarch T	2006 - 2007	FL
	300	Main Street (Scooter)	2007 - 2008	FL

LONCIN

LX	150	6	2002 - 2002	FL

MBK

YP	250	Skyliner	1996 - 1999	FL
YP	250	Skyliner (+ABS)	2000 - 2002	FL
YP	400	Skyliner	2004 - 2004	FL

MZ

	1 000	(MUZ) S	2001 - 2002	RR

PIAGGIO VESPA

XVS	250	Tricker	2005 - 2005	FL

QUINGOI

QM	125	2V	2002 - 2002	FL

SINNIS

	125	Max QM 125-2V	2008 - 2009	FL
JS	125	6C SC	2012 - 2014	FL

YAMAHA

SR	125		1997 - 2003	FL	
TDR	125	(4GW/GX 1/2/3/4)	1993 - 2003	FL	
TZR	125		1993 - 1993	FL	
TZR	125		1994 - 1994	FL	
XV	125	Virago	1997 - 2000	FL	
XVS	125	Drag Star	2000 - 2003	FL	
TZR	150	R (4AP2)	2000 - 2000	FL	
XV	250	S Virago	1995 - 2000	FL	
XVS	250	Drag Star	2001 - 2004	FL	
YP	250	DX/A Majesty	1998 - 2003	FL	
YP	250	Majesty	1996 - 1997	FL	
XJR	400	(4HM1/4HM2/4HM4/4HM7)	1993 - 1996	FL	FR
YP	400	Majesty (ABS)	2007 - 2013	FL	FR
YP	400	Majesty (Non ABS)	2004 - 2013	FL	FR
XP	500	S/T/V T-Max (5VU1/2)	2004 - 2007	FL	FR
FZ6	600	Fazer (ABS/Half Fairing/ 2 Piston Caliper)(4P5)	2006 - 2007	FL	FR
FZ6	600	Fazer (Half Fairing/Non ABS/ 2 Piston Caliper) (5VX/5VXL)	2004 - 2007	FL	FR
FZ6	600	Naked/Non ABS/ 2 Piston Caliper (1B3/1B3D)	2004 - 2007	FL	FR
FZ6	600	NS Naked / Non ABS/2 Piston Caliper	2005 - 2006	FL	FR
XJ	600	N	1998 - 2003	FL	FR
XJ	600	S "Diversion"	1998 - 2003	FL	FR
XJ6	600	Diversion (ABS)	2009 - 2009	FL	FR
XJ6	600	Diversion (Non ABS)	2009 - 2009	FL	FR
XJ6	600	SP	2013 - 2013	FL	FR
XJ6-F	600	Diversion (Full Fairing - 1CW1) (Non ABS/ABS)	2010 - 2015	FL	FR
XJ6-N	600	(Naked 20S) (Non ABS/ABS)	2009 - 2015	FL	FR
XJ6-S	600	Diversion (Top Fairing - 36) ABS and Non ABS Version	2009 - 2015	FL	FR
MT-03	660		2006 - 2012	FL	FR
XV	1 100	Virago	1999 - 1999	FL	FR
XVS	1 100	A "Dragstar Classic"	2000 - 2007	FL	FR
XVS	1 100	Dragstar	1999 - 2004	FL	FR
XVS	1 300	A Midnight Star	2007 - 2016	FL	FR
XVS	1 300	ACFD Midnight Star/Casual Full Dresser (With Handlebar Fairing)	2014 - 2016	FL	FR

EQUIVALENTS OEM

1B7 W0045 00	4GA W0045 00	4HM W0045 00	4EB W0045 00	4716630	5VX W0045 00	5VH W0045 00
5RU W0045 00	5VU W0045 10					

AD	K1	K5	K5-LX	S3	S33 RACING

PART NUMBER

100

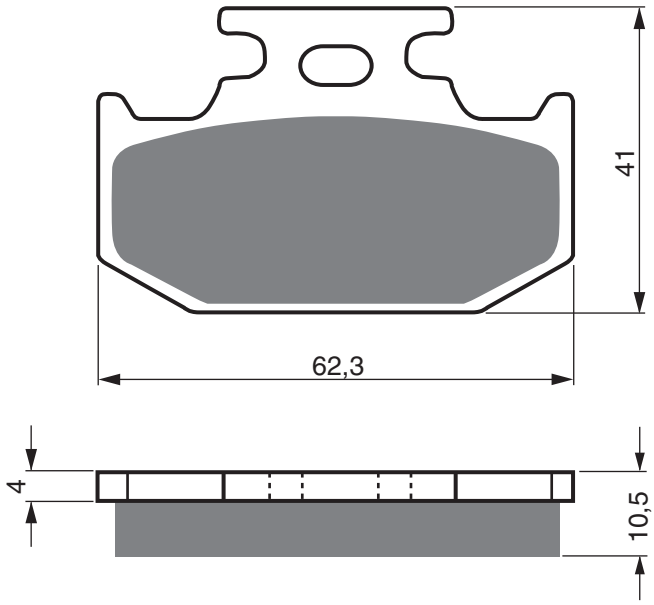

SUZUKI

RM	125	N/P/R/S	1992 - 1995	RR
DR-Z	250	K1-K7 (DJ43A)	2001 - 2007	RR
RM	250	N/P/R/S	1992 - 1995	RR
RMX	250	R/S	1994 - 1995	RL
RMX	250	SN/SR/SS (SJ13A)	1995 - 1997	RR
DR	350	V, W, X	1997 - 1997	RR

YAMAHA

YZ	125	D/E/F/G/H/J	1992 - 1997	RR
YZ	125	R	1991 - 1991	RR
DT	200	WR (3XP)	1992 - 1993	RR
XT	225	WE (4JG5/6) Serrow	1997 - 1998	RR
DT	230	(4TP1/2) Lanza	1997 - 1998	RR
TT	250	R (4GY) Raid / 4MR2	1996 - 1996	RR
TT	250	R (4GY1 Japan)	1993 - 1994	RR
TT	250	R (4GY3/4GY5/4WA1) Raid	1994 - 1996	RR
TT	250	R (4RR1/2 Japan)	1995 - 1997	RR
TT	250	RL (4PX5)	1999 - 1999	RR
TT	250	RM (4PX6)	2000 - 2000	RR
YZ	250	D/E/F/G/H/J	1992 - 1997	RR
WR	400	FK	1998 - 1998	RR
TT	600	E (4GV2)	1994 - 1995	RR

EQUIVALENTS OEM

69100 43820	69100 43840	69100 43850	69140 05D00	69140 26C00	69140 27C10	69140 27C20
69140 43D00	69140 43840	3SP W0046 00	3XP W0046 00	4DA W0046 00	4GV FS811 00	4GY W0046 00
5GF W0046 00						

PART NUMBER

101

AD | S3

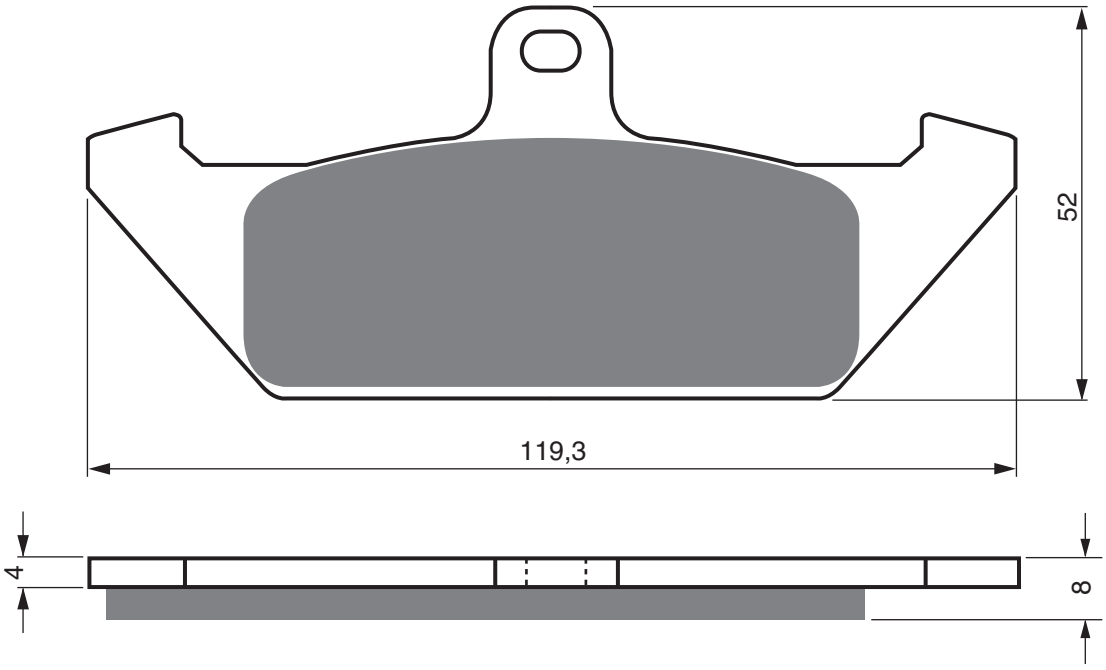

CAGIVA					
	650	Elefant	1985 - 1985	FL	
	650	Elefant	1988 - 1989	FL	
LAVERDA					
OR	600	Atlas	1986 - 1986	FL	
MOTO-MORINI					
	350	Excalibur	1986 - 1986	FL	RR
	350	Indiana	1988 - 1988	FL	
	501	Excalibur	1986 - 1986	FL	RR
	501	Excalibur	1989 - 1989	FL	
	501	New York	1989 - 1989	FL	
	650	Indiana	1988 - 1988	FL	
	750	Indiana	1988 - 1988	FL	

EQUIVALENTS OEM

800045453

AD	K1	K5	K5-LX	S3	S33 RACING

PART NUMBER

102

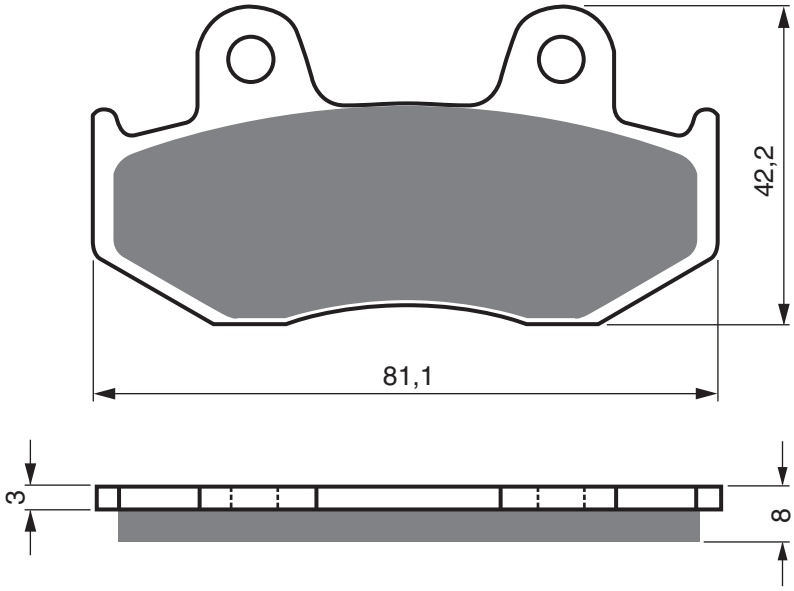

HONDA

CR	125	RE/RF	1984 - 1985	FL	
CR	125	RG	1986 - 1986	FL	
XL	125	RF/RH	1985 - 1986	FL	
MTX	200	RWF	1985 - 1985	FL	
XL	200	R	1985 - 1985	FL	
FTR	223	(MC34) Y2/A2	2000 - 2002	FL	
ATC	250	RF/RG	1985 - 1986	FL	RR
CH	250	F/G Spacy	1985 - 1986	FL	
CR	250	RE/RF	1984 - 1985	FL	
CR	250	RG	1986 - 1986	FL	
TRX	250	RG/RH/RJ/RK	1986 - 1989	RR	
XL	250	R (MD11/D447)	1984 - 1987	FL	
XR	250	RE/RF/RG/RH	1984 - 1987	FL	
CR	500	RE/RF/RG	1984 - 1986	FL	
XR	500	RD/RE	1984 - 1985	FL	
XL	600	RD/LD/LRE/LE/RF/RG/RH	1983 - 1987	FL	
XR	600	RF/RG/RH	1985 - 1987	FL	

KAWASAKI

SC	250	A1 (Epsilon 250)	2002 - 2003	RR	

SUZUKI

AN	250	W/X/Y Burgman/Skywave	1998 - 2000	RR	
AN	400	X/Y Burgman/Skywave	1999 - 2000	RR	

EQUIVALENTS OEM

69100 14840	69100 14860	43082 S003

PART NUMBER

103

AD	K5	S3

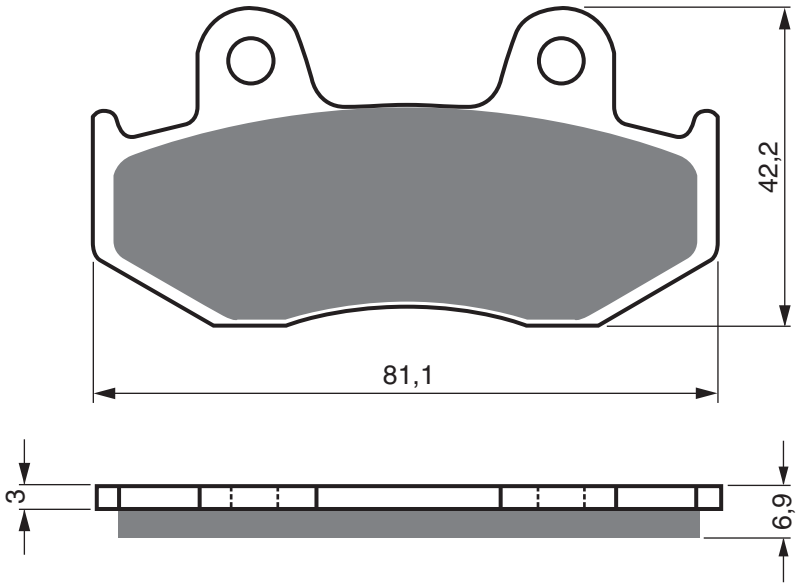

HONDA

CH	125	F/G Spacy	1985 - 1986	FL

EQUIVALENTS OEM

45105 KM1 004	45105 KM1 007	45105 KM1 711	45105 KM1 712	45105 KM1 710

AD	S3	S33 RACING	GP5	GP6	GP7	GPR

PART NUMBER

104

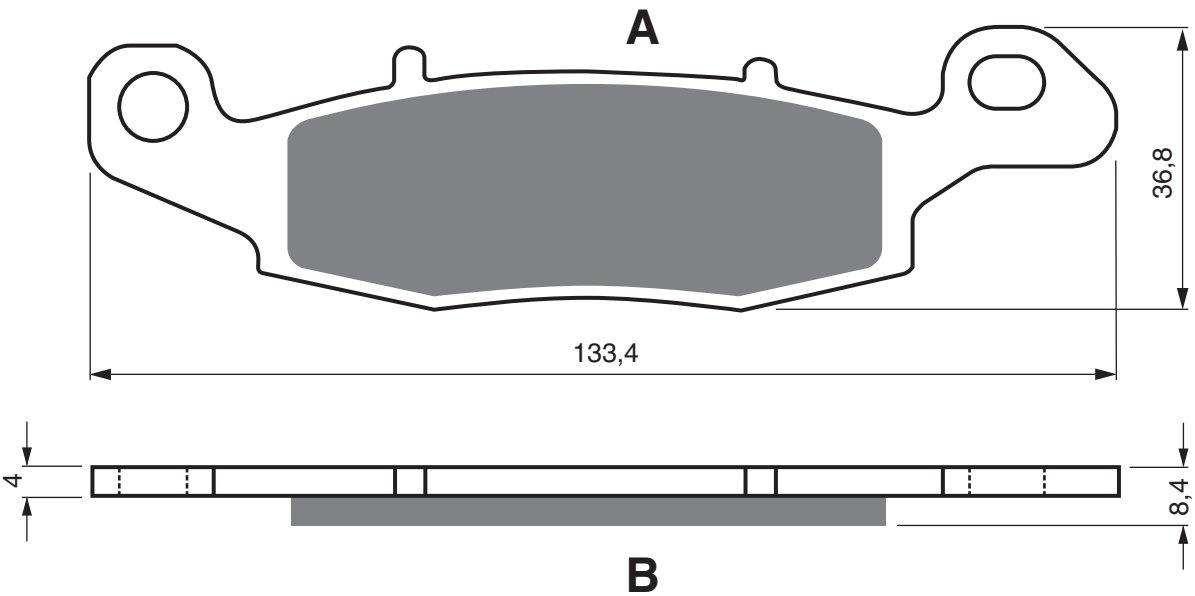

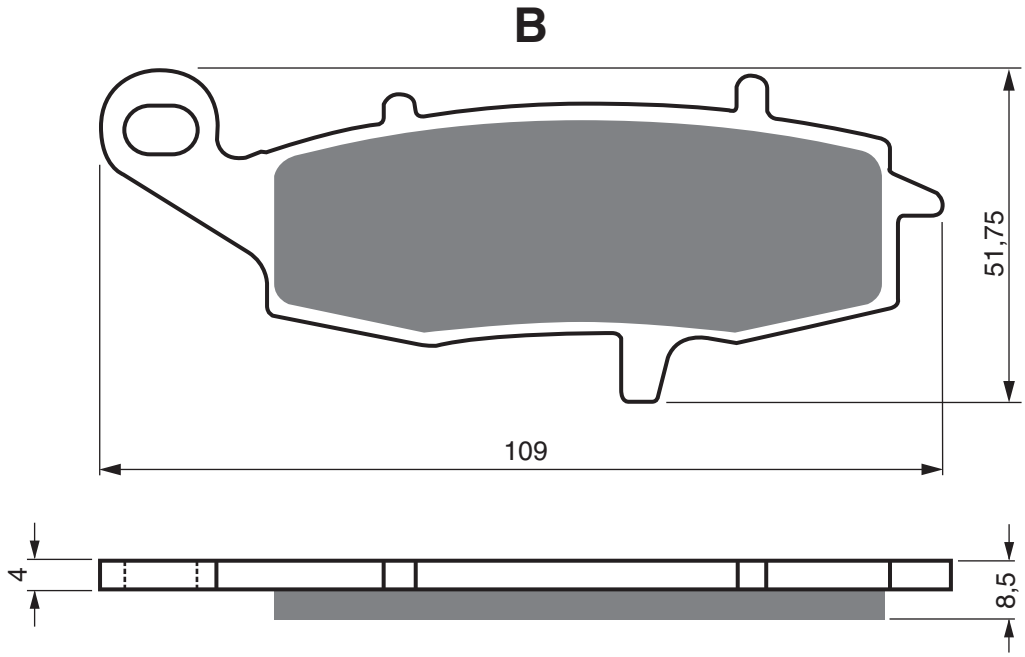

CF MOTO				
	650	NK	2012 - 2015	FL
	650	TK	2013 - 2015	FL
	650	TR	2013 - 2014	FL
	650	MT	2021 - 2021	FL
KAWASAKI				
ZRX	400	E3 (ZR 400 E3)	1996 - 1996	FL
ER-5	500	(ER500 C1/C3/C4/C5P)	2001 - 2007	FL
	650	(KLE CBF/CCF/CEF) Versys Non ABS	2012 - 2012	FL
ER-6F	650	(EX 650 A6F/A7F/A8F/C9F/CAF/CBF)	2006 - 2011	FL
ER-6F	650	(EX 650 B6F/B7F/B8F/D9F/DAF/DBF) ABS	2006 - 2011	FL
ER-6F	650	(EX 650 ECF/EDS/EEF/EFF/EGF) (Double pipe typeframe/Non ABS)	2012 - 2016	FL
ER-6F	650	(EX 650 FCF/FDS/FEF/FFF/FGF) Double pipe typerame/With ABS)	2012 - 2016	FL
ER-6N	650	(ER 650 B6F/B7F/B8F/D9F/DAF/DBF)	2006 - 2011	FL
ER-6N	650	(EX 650 A6F/A6F/A8F/C9F/CAF/CBF)	2006 - 2011	FL
ER-6N	650	(EX 650 ECF/EDF/EEF/EFF/EGF) (Non ABS)	2012 - 2016	FL
ER-6N	650	(FCF/FDF/FEF/FFF/FGF) ABS	2012 - 2016	FL
EX	650	R (EX 650 CBF)	2011 - 2014	FL
KLE	650	A7F/A8F/A9F/CAF/CBF/CCF/CDF/CEF Versys	2007 - 2014	FL
KLE	650	B7F/B8F/B9F/DAF/DBF/DCF/DDF/DEF Versys (ABS)	2007 - 2014	FL
KLR	650	C1-C10	1995 - 2004	FL
Z	750	(ZR 750 J1/J2)	2004 - 2005	FL
Z	750	S (ZR 750 K1/K6F)	2005 - 2007	FL
ZR	750	D1 Zephyr	1996 - 1999	FL
ZR-7	750	(ZR 750 F1/F3/F5)	1999 - 2004	FL
ZR-7S	750	(ZR 750 H1/H2)	2001 - 2004	FL
VN	800	B1-B10/B6F/BDF Classic	1996 - 2006	FL
VN	800	C1/C2/E1/E2/E3 Drifter	1999 - 2004	FL

PART NUMBER

104

AD	S3	S33 RACING	GP5	GP6	GP7	GPR

VN	900	A6F Classic	2006 - 2006	FL
VN	900	B7F/B8F/B9F/BAF/BBF/BCF/BDF/BEF/BFF/BGF/BHF/BJF Classic (Spoke wheel)	2007 - 2021	FL
VN	900	BBFA/BCFA/BDFA/BFFA Classic Special Edition/White wall Tyres Spoke Wheel	2011 - 2020	FL
VN	900	C7F/C8F/C9F/CAF/CBF/CCF/CDF/CEFA/CFFA/CGF/CHF/CJF Custom (Cast wheel)	2007 - 2021	FL
KLV	1 000	(LV 1000 A1H/A2H)	2004 - 2005	FL
GPZ	1 100	ABS Horizont (ZXT10F/G936)	1997 - 1998	FL
GPZ	1 100	E1/E2/F1	1995 - 1998	FL
ZR	1 100	B1 "Zephyr"	1996 - 1997	FL
ZR	1 100	B5 (Zephyr 1100 RS)	2002 - 2002	FL
ZR	1 100	Zephyr (ZRT1100B/F989)	1997 - 1997	FL
VN	1 500	D1/D2/E1/E2 "Classic"	1996 - 1999	FL
VN	1 500	G1/G2 Classic Tourer	1998 - 1999	FL
VN	1 500	J1/J2/R1/R2/R3 Drifter	1999 - 2004	FL
VN	1 500	L1/L2/L3/L4 Nomad Fi	2000 - 2003	FL
VN	1 500	N1/N2/N3 Classic Fi	2000 - 2004	FL
VN	1 600	A1/A2/A3/A6F Classic	2003 - 2008	FL
VN	1 600	D1H/D6F Classic Tourer	2005 - 2008	FL
VN	1 700	C9F Classic Tourer	2009 - 2009	FL
VN	1 700	E9F Classic	2009 - 2009	FL

SUZUKI

GSF	250	VS/VT/VV/VVZ/VW/VX/VY Bandit (GJ77)	1995 - 2000	FL
TU	250	GY/GBK1 Grass Tracker / Big Boy (NJ47A-117/123)	2000 - 2001	FL
TU	250	XTX/XTY (NJ47-115) Volty	1999 - 2000	FL
GSF	400	Bandit (GK75B/F610)	1994 - 1996	FL
SV	400	SX/SY/SK1/SK2	2000 - 2002	FL
SV	400	X/Y/K1/K2	2000 - 2002	FL
SV	400	K3/K4/K5	2003 - 2005	FL
SV	400	SK3/SK4/SK5	2003 - 2005	FL
GSF	600	SY/SK1/SK2/SK3/SK4 (Faired Bandit)	2000 - 2004	FL
GSF	600	Y/K1/K2/K3/K4 (Naked Bandit)	2000 - 2004	FL
GSX	600	FW/FX/FY/FK1/FK2/FK3/FK4/FK5/FK6	1998 - 2006	FL
DL	650	K4/K5/K6 V-Strom	2004 - 2006	FL
DL	650	AK7/AK8/AK9/AL0 V-Strom ABS	2007 - 2011	FL
DL	650	XK7/XK8/XK9/XL0 V-Strom X	2007 - 2011	FL
DL	650	AK9 GT V-Storm Traveller ABS	2009 - 2011	FL
DL	650	AL1 XP V-Strom Expedition	2011 - 2011	FL
DL	650	AL2/AL3/AL4/AL5/AL6/AL7/AL8/AL9 V-Strom ABS	2012 - 2021	FL
DL	650	XT XAL5/XAL6/XAL7/XAL8/XAL9 V-Strom ABS	2015 - 2021	FL
DL	650	XT V-Strom Touring ABS	2018 - 2020	FL
GSF	650	AK5/AK6 Naked Bandit - ABS	2005 - 2006	FL
GSF	650	K5/K6 Naked Bandit Non ABS	2005 - 2006	FL
GSF	650	SAK5/SAK6 Faired Bandit ABS	2005 - 2006	FL
GSF	650	SK5/SK6 Faired Bandit Non ABS	2005 - 2006	FL
SFV	650	AK9/AL0/AL1/AL2/AL3/AL4/AL5 (ABS)	2009 - 2015	FL
SFV	650	K9/L0/L1/L2/L3/L4/L5 Gladius	2009 - 2015	FL
SV	650	SX/SY/SK1/SK2 Top Fairing Non ABS	1999 - 2002	FL
SV	650	X/Y/K1/K2 Naked - Non ABS	1999 - 2002	FL
SV	650	K3/K4/K5/K6/K7/K8/K9/L0 Naked - Non ABS	2003 - 2010	FL
SV	650	SK3/SK4/SK5/SK6/SK7/SK8/SK9/SL0 Top Fairing - Non ABS	2003 - 2015	FL
SV	650	AK7/AK8/AK9/AL0 Naked - ABS	2007 - 2010	FL
SV	650	SAK7/SAK8/SAK9/SAL0	2007 - 2015	FL
SV	650	AL7/AL8/AL9 (ABS)	2016 - 2020	FL
SV	650	X AL8/AL9 (ABS)	2018 - 2020	FL
GSR	750	AL2/AL3/AL4/AL5 (ABS)	2011 - 2015	FL
GSR	750	L1/L2/L3/L4/L5/L6 (Non ABS)	2011 - 2016	FL
GSX	750	FW/FX/FY/FK1/FK2/FK3/FK4/FK5/FK6	1998 - 2006	FL
GSX	750	W/X/Y/K1	1998 - 2002	FL
DR	800	ST/SV (SR43B)	1996 - 1997	FL
VX	800	T	1996 - 1996	FL
DL	900	Migrator	2014 - 2019	FL
DL	1 000	K2/K3/K4/K5/K6/K7/K8/K9/L0 V-Strom	2002 - 2010	FL
DL	1 000	V-Strom ABS Adventure AL2	2012 - 2013	FL
GSX	1 100	G (GV74A/F725)	1996 - 1996	FL
M	1 500	(VZ 1500 K9/L0/L1 Intruder)	2009 - 2013	FL
VL	1 500	K2/K3 Intruder	2002 - 2003	FL
VL	1 500	K5/K6/K7/K8 (C1500) Intruder	2005 - 2008	FL

W.K.BIKES

	650	i (Naked)	2013 - 2015	FL
	650	TR (Touring)	2013 - 2015	FL

EQUIVALENTS OEM

43082 1177	43082 1187	59301 33820	59301 33830	59301 33840	59302 22850	59302 33810
43082 0009	43082 1223	43082 1234	43082 1244	43082 1282	43082 S019	59300 33850
59302 33830	59303 33810	A000-0801A0	59302 33850			

AD | S3

PART NUMBER

105

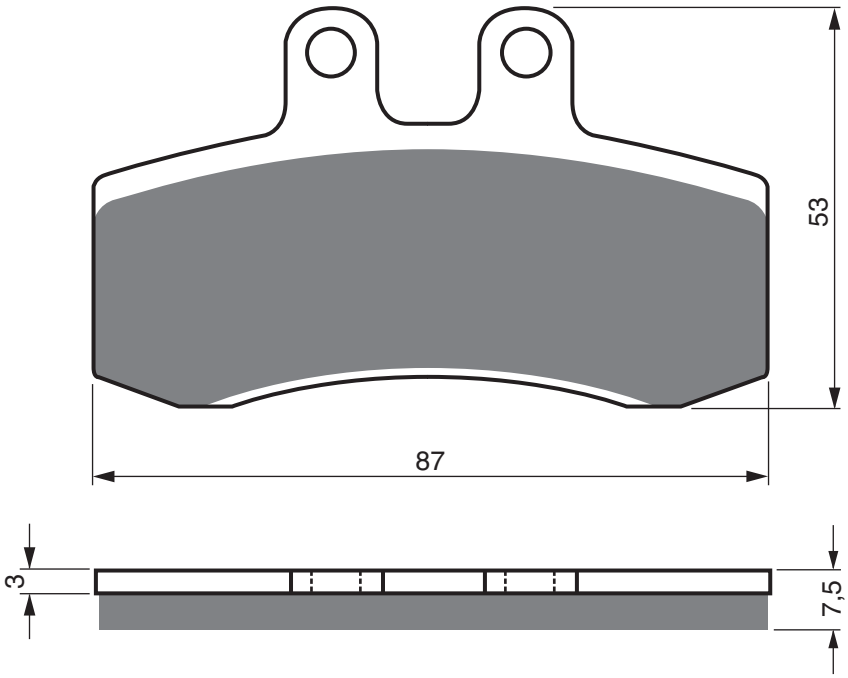

APRILIA

650	Pegaso	1991 - 1996	FL

MZ

660	(MUZ)Supermotard	2006 - 2007	FL
660	Baghira 21" FW / Spoke Wheel	1999 - 2005	FL
660	Baghira Black Panther (17" FW / Spoke Wheel)	1996 - 2003	FL
660	Baghira Forest / Forest HR (21" FW / Spoke Wheel)	1996 - 2005	FL
660	Baghira Street Moto (17"FW / Spoke Wheel)	1996 - 2005	FL
660	Mastiff (21" FW / Spoke Wheel)	1996 - 2005	FL

EQUIVALENTS OEM

9022001000

PART NUMBER

106

AD	S3	S33 RACING	GP5	GP6	GP7

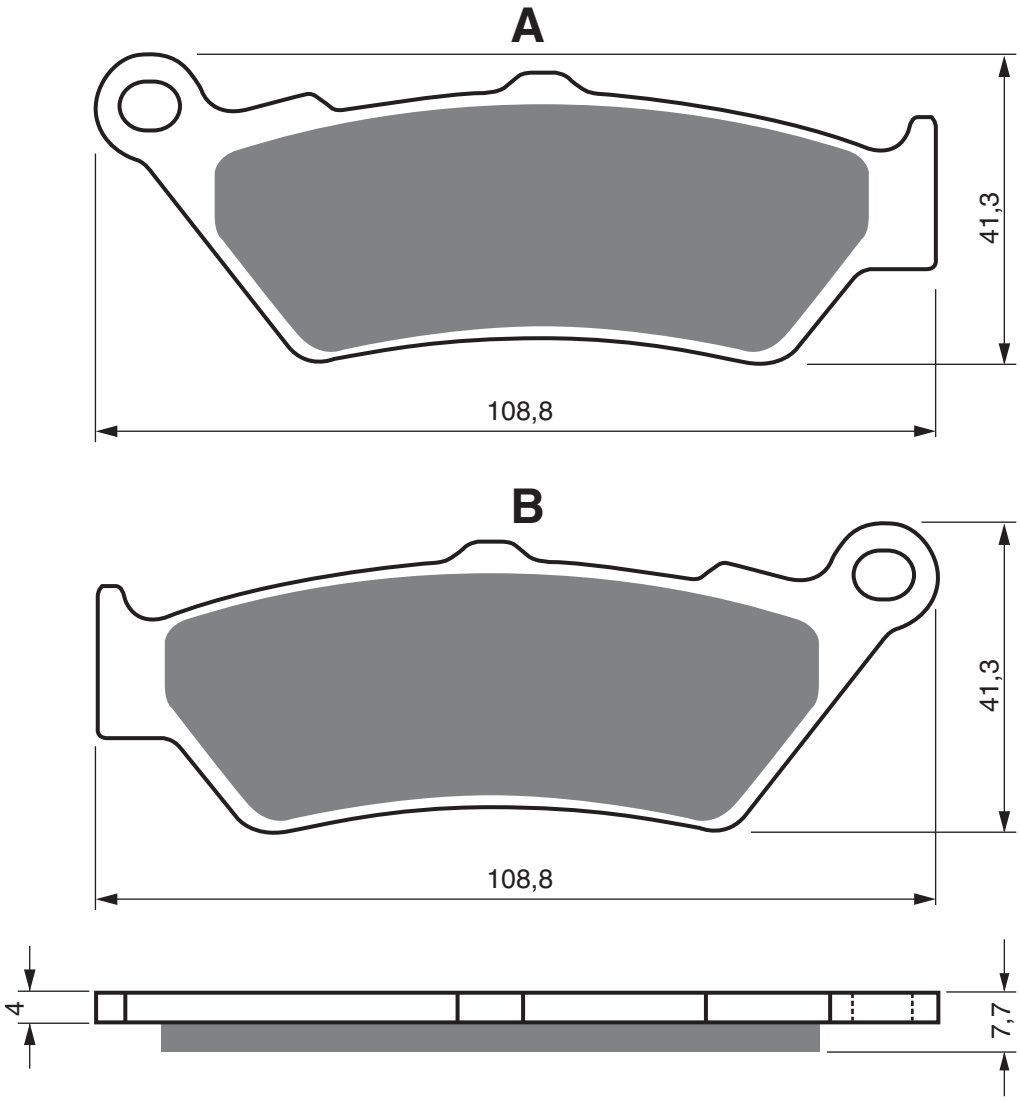

APRILIA					
	650	Moto 6.5	1995 - 2001	FL	
	650	Pegaso	1997 - 2000	FL	
	650	Pegaso ie	2001 - 2004	FL	
	650	Pegaso Trial	2006 - 2008	FL	
ETV	1 000	Caponord (Non ABS - Bolt Fixing)	2001 - 2003	FL	FR
ETV	1 000	Caponord Rally Raid (Non ABS - Bush Fixing)	2003 - 2003	FL	FR
ETV	1 000	Caponord (ABS - Bush fixing)	2004 - 2007	FL	FR
BENELLI					
TRK	502	X	2017 - 2020	FL	
BIMOTA					
DBX	1 100	(MX)	2012 - 2014	FL	FR
BMW					
C1	125		1999 - 2003	FL	
C1	200		2001 - 2003	FL	
F	650	(E169/0161) Standard	1993 - 1996	FL	
F	650	(E169/0162) (Funduro/High Screen / 19" Front Wheel)	1997 - 2000	FL	
F	650	CS Scarver (K14/0174/0184 - Belt Drive / 17" Cast Wheels)	2000 - 2003	FR	
F	650	CS Scarver (K14/0177/0187 - Belt Driver / 17" Cast Wheels)	2004 - 2007	FL	
F	650	GS (30 Years GS) (Twin Cylinder 798cc/Cast wheel)	2011 - 2011	FL	
F	650	GS (K72/0218/0228) (798cc Twin Cylinder/Cast Wheels)	2007 - 2012	FL	
F	650	GS (R13/0172/0182) (19" Front Wheel)	1999 - 2003	FL	
F	650	GS (R13/0175/0185) Single Cylinder	2004 - 2007	FL	
F	650	GS Dakar (R13/0173/0183) (21" Front Wheel)	1999 - 2003	FL	
F	650	GS Dakar (R13/0176/0186) (21" Front Wheel)	2004 - 2007	FL	
F	650	ST (E169/0163/168) Strada (18" Front Wheel / Low Screen)	1997 - 2000	FL	
G	650	GS (R131) (Single Cylinder / Chain Drive)	2009 - 2015	FL	
G	650	GS Sertao (Spoke Wheels)	2012 - 2014	FL	
G	650	XChallenge	2007 - 2009	FL	
G	650	XCountry	2007 - 2009	FL	
F	700	GS	2013 - 2018	FL	FR
F	800	GS	2008 - 2018	FL	FR
F	800	GS (30 Years GS)	2011 - 2011	FL	FR
F	800	GS Adventure	2012 - 2018	FL	FR
F	800	GS Triple Black	2012 - 2012	FL	FR
F	800	GS Trophy	2012 - 2018	FL	FR
HP2	1 200	Enduro	2005 - 2009	FL	
R	1 200	GS (K50) (Liquid Cooled/radial mount caliper)	2013 - 2018	RR	
R	1 200	GS Adventure (inc TE/XE models/K51/LC)	2014 - 2018	RR	

AD | S3 | S33 RACING | GP5 | GP6 | GP7

PART NUMBER

106

R	1 200	R (Disc has fixed bobbins)	2015 - 2018	RR	
R	1 200	R Sport (Disc has fixed bobbins)	2015 - 2018	RR	
R	1 200	RS (Disc has fixed bobbins)	2015 - 2018	RR	
R	1 200	RS Sport (Disc has fixed bobbins)	2015 - 2018	RR	
R	1 200	RT (K52 Radial F-Caliper / LC)	2014 - 2018	RR	
R	1 250	GS (Disc has fixed bobbins)	2019 - 2021	RR	
R	1 250	GS Exclusive TE (Disc has fixed bobbins)	2019 - 2020	RR	
R	1 250	GS Rallye (Disc has fixed bobbins)	2019 - 2020	RR	
R	1 250	GS Rallye TE (Disc has fixed bobbins)	2019 - 2021	RR	
R	1 250	GS TE (Disc has fixed bobbins)	2019 - 2021	RR	
R	1 250	RT (Disc has fixed bobbins)	2019 - 2021	RR	
R	1 250	RT LE (Disc has fixed bobbins)	2019 - 2021	RR	
R	1 250	RT SE (Disc has fixed bobbins)	2019 - 2021	RR	
K	1 600	B Bagger	2017 - 2021	RR	
K	1 600	B Grand America	2018 - 2020	RR	
K	1 600	GT (Disc has fixed bobbins)	2011 - 2020	RR	
K	1 600	GT Sport (Disc has fixed bobbins)	2015 - 2015	RR	
K	1 600	GTL (Disc has fixed bobbins)	2011 - 2020	RR	
K	1 600	GTL Exclusive (Disc has fixed bobbins)	2013 - 2016	RR	
K	1 600	GTSE (Disc has fixed bobbins)	2012 - 2015	RR	
BRAMMO					
		Enertia	2012 - 2013	FL	
CCM					
GP	450	(4T)	2013 - 2015	FL	
DUCATI					
	400	Scrambler Sixty 2	2016 - 2021	FL	
	992	Classic Sport Biposto	2007 - 2007	FL	FR
	1 000	Paul Smart LE (992cc)	2006 - 2006	FL	FR
	1 000	Sport Classic (992cc) (Monoposto - Japan/Biposto - Europe)	2006 - 2008	FL	FR
	1 000	Sport S	2007 - 2009	FL	FR
	1 000	Sport S (992cc)	2007 - 2007	FL	FR
GT	1 000	(992 ccm)	2007 - 2010	FL	FR
GT	1 000	Touring (992cc)	2009 - 2009	FL	FR
	1 158	Multistrada V4	2021 - 2021	RR	
	1 158	Multistrada V4S	2021 - 2021	RR	
	1 158	Multistrada V4 Sport	2021 - 2021	RR	
	1 200	Diavel ABS	2011 - 2018	RR	
	1 200	Diavel AMG	2011 - 2012	RR	
	1 200	Diavel Carbon ABS	2011 - 2019	RR	
	1 200	Diavel Chromo ABS	2012 - 2012	RR	
	1 200	Diavel Dark (ABS)	2013 - 2014	RR	
	1 200	Diavel Diesel	2017 - 2018	RR	
	1 200	Diavel Strada	2013 - 2014	RR	
	1 200	Multistrada (ABS (Single PIn F/Caliper)	2015 - 2018	RR	
	1 200	Multistrada Enduro	2016 - 2016	RR	
	1 200	S Multistrada	2015 - 2018	RR	
	1 200	S Multistrada D Air	2015 - 2017	RR	
	1 200	S Multistrada Pikes Peak	2016 - 2017	RR	
	1 262	Diavel Diesel	2017 - 2018	RR	
	1 262	XDiavel	2016 - 2021	RR	
	1 262	XDiavel S	2016 - 2021	RR	
	1 262	Xdiavel Dark	2021 - 2021	RR	
	1 262	Xdiavel Dark Star	2021 - 2021	RR	
HARLEY DAVIDSON					
XG	500	Street (300mm Discs)	2016 - 2020	FR	
XG	750	Street (300mm Discs)	2016 - 2020	FL	
HONDA					
CB	500	V/W/SW/X/SX/Y/SY/2/S2 (Twin)	1997 - 2003	FL	
NX	500	V/W/X Dominator	1997 - 1999	FL	
FX	650	X/Y Vigor	1999 - 2003	FL	
NT	650	V/W	1997 - 1998	FL	
NT	650	VW/VX/VY/V1 Deauville	1998 - 2001	FL	FR
NX	650	V/W/X Dominator	1997 - 1999	FL	
SLR	650	V/W	1997 - 1998	FL	
HUSQVARNA					
FR	450	(4T)	2016 - 2020	FL	
TR	650	Strada (Cast wheel)	2012 - 2013	FL	
TR	650	Terra (Spoke wheel)	2012 - 2013	FL	
	701	Enduro	2016 - 2020	FL	
INDIAN					
		Scout	2017 - 2020	FL	
		Scout Bobber	2018 - 2020	FL	
		Scout Bobber Twenty	2019 - 2020	FR	
		Scout Sixty	2017 - 2020	FL	
ITALJET					
	650	Griffon #59	2007 - 2007	RR	
KTM					
	450	Rally	2017 - 2020	FL	
LC4	640	Adventure	2005 - 2007	FL	FR
LC4	640	Adventure R	2004 - 2004	FL	
	690	Enduro	2008 - 2020	FL	
	690	Enduro R	2009 - 2010	FL	
	690	Enduro R	2011 - 2020	FL	
	690	Enduro R (ABS)	2014 - 2020	FL	
	690	Rally Factory Replica	2007 - 2009	FL	
	950	Adventure	2002 - 2006	FL	FR
	950	Adventure S	2003 - 2006	FL	FR
	950	R Superenduro	2006 - 2008	FL	FR
	990	Adventure R (Non ABS)	2009 - 2012	FL	FR
	990	Adventure S (Non ABS)	2006 - 2008	FL	FR
LC8	990	Adventure (Non ABS)	2009 - 2012	FL	FR
LC8	990	Adventure Dakar Edition (ABS)	2011 - 2011	FL	FR
MOTO-GUZZI					
	940	Bellagio	2007 - 2013	FL	FR
	1 100	California 90	2012 - 2012	RR	
	1 100	California Aluminium	2002 - 2005	RR	
	1 100	California Aquila Nera	2009 - 2011	RR	
	1 100	California Classic Touring	2006 - 2008	RR	
	1 100	California EV (From KD115427 / 2 pin pad fixing)	1997 - 2002	RR	
	1 100	California EV (Up to KD115426/Single pad pin fixing)	1997 - 2000	RR	
	1 100	California EV Touring	2003 - 2005	RR	
	1 100	California Jackal (2pad pin Fixing/From KD152329)	1994 - 2001	RR	
	1 100	California Jackal (Up to KD152328 / Single pin pad fixing)	1994 - 2001	RR	
	1 100	California Special (From KD131645/2 pin pad fixing)	1999 - 2000	RR	
	1 100	California Special (Up to KD131644 / Single pin pad fixing)	1999 - 2000	RR	
	1 100	California Sport	2001 - 2002	RR	
	1 100	California Stone	2001 - 2005	RR	
	1 100	California Stone Metal	2002 - 2003	RR	
	1 100	California Titanium (With Top Fairing)	2004 - 2005	RR	
	1 100	California Vintage	2006 - 2012	RR	
	1 100	Griso	2005 - 2008	RR	
	1 100	Griso 8V (Standart/Cast Wheel/Radial Caliper)	2007 - 2012	RR	
	1 100	Quota ES	1999 - 2001	FL	FR
	1 200	Griso 8V (Special Edition/Spoke Wheel/Radial Caliper)	2007 - 2015	RR	
	1 400	Audace	2015 - 2016	RR	
	1 400	Audace Carbon	2016 - 2017	RR	
	1 400	California Custom	2013 - 2015	RR	
	1 400	California Touring	2013 - 2020	RR	
	1 400	California Touring SE	2015 - 2017	RR	
	1 400	Eldorado	2015 - 2017	RR	
MGX	1 400	21	2016 - 2020	RR	

PART NUMBER

106

AD | S3 | S33 RACING | GP5 | GP6 | GP7

MOTO-MORINI

1 200	Granpasso	2008 - 2013	FL	FR
1 200	Scrambler	2010 - 2013	FL	FR

ROYAL ENFIELD

535	Continental GT (ABS)	2017 - 2020	FL
535	Continental GT (Non ABS)	2013 - 2016	FL

SWM

600	Super Dual T	2016 - 2020	FL
600	Super Dual X	2016 - 2020	FL

TRIUMPH

1 600	Thunderbird (1597cc)	2009 - 2018	RR
1 700	Thundebird Storm	2011 - 2018	RR
1 700	Thunderbird Commander (1699cc)	2014 - 2018	RR
1 700	Thunderbird LT (1699cc)	2014 - 2018	RR
1 700	Thunderbird Nightstorm	2015 - 2018	RR
1 700	Thunderbird Storm (1699cc)	2011 - 2018	RR
2 300	Rocket III	2004 - 2009	RR
2 300	Rocket III Classic	2007 - 2009	RR
2 300	Rocket III Roadster-ABS	2010 - 2018	RR
2 300	Rocket III Touring	2008 - 2009	RR
2 300	Rocket III Touring	2013 - 2017	RR
2 300	Rocket X	2015 - 2016	RR

VICTORY

	All Models	1998 - 2007	RR
	Ness Signature Series	2005 - 2007	RR
	Vegas	2003 - 2007	RR
V92SE	(Special Edition)	2000 - 2000	RR
V92TC	(Special Edition)	2003 - 2006	RR
1 200	Octane	2017 - 2017	FL
1 500	Hammer S	2007 - 2007	RR
1 500	King Pin	2004 - 2007	RR
1 500	King Pin Tour	2004 - 2007	RR
1 500	Vegas 8-Ball	2005 - 2007	RR
V92C	1 500 (Standard Cruiser)	1998 - 2002	RR
V92DH	1 500 (Deluxe Cruiser)	2001 - 2002	RR
V92SC	1 500 (Sport Cruiser)	2000 - 2001	RR
1 634	Hammer	2005 - 2007	RR
1 634	Vegas Jackpot	2006 - 2007	RR

YAMAHA

DT	125 X	2005 - 2006	FL
XT	660 R	2004 - 2016	FL

ZERO

DS	(ZF13.0) ((J.Juan F&R Calipers)	2016 - 2019	FL
DS	(ZF9.4/ZF12.5) (J.Juan F&R Calipers)	2015 - 2015	FL
DS II	(ZF14.4)	2019 - 2020	FL
DS II	(ZF7.2)	2019 - 2020	FL
DSR	(ZF13.0) (J.Juan F&R Calipers)	2017 - 2019	FL
DSR	(ZF14.4.0)	2019 - 2020	FL
DSR	Black Forest Edition (ZF14.4.0)	2019 - 2020	FL
FX	(ZF3.3/ZF6.5) (J.Juan F&R Calipers)	2016 - 2020	FL
FXS	(ZF3.3/ZF6.5) (J.Juan F&R Calipers)	2017 - 2020	FL
S	(ZF14.4)	2019 - 2020	FL
S	(ZF7.2)	2019 - 2020	FL
S	(ZF9.4/ZF12.5) (J. Juan F & R Calipers)	2015 - 2015	FL
S	(ZF9.8/ZF13.0) (J.Juan F&R Calipers)	2016 - 2019	FL
SR	(ZF12.5) (J. Juan F & R Calipers)	2015 - 2015	FL
SR	(ZF13.0) (J.Juan F&R Calipers)	2016 - 2020	FL

EQUIVALENTS OEM

06455 MAK 000	06455 MAN 911	06455 MY5 731	06455 MAK 003	0000 365 46000	34 11 2 345 445	8113533
34 11 7 660 340	34 11 7 651 958	34 11 7 697 086	34 11 7 711 498	3411 7 705 216	34 21 7 724 609	34 21 8 534 821
34 21 8 554 424	2202491	5VK W0045 00	600 13 030 000	2C8 W0045 00	8113627	8133906
000306546260	GU03654600	GU30654626	61340751A	61340941A	T2020692	T202048
AP8113627	M1340001400	8532279	41300169	34 21 8 5662 163	60013020000	T20692
T2020848	2204724	585925/A				

AD | S3

PART NUMBER

107

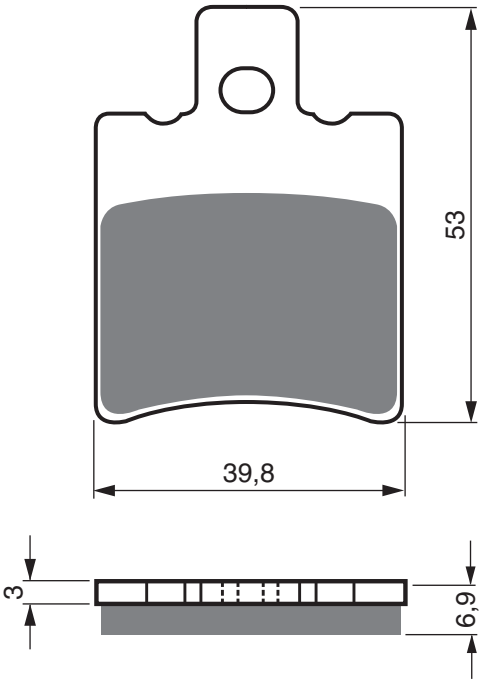

AJP

PR3	125	Supermoto Pro	2010 - 2011	FL	

APRILIA

		Amico (All Models)	1996 - 1998	FL	
		Gulliver (All Models)	1995 - 1998	FL	
		Rally A/C (All Models)	1995 - 2002	FL	
		Rally L/C (All Models)	1996 - 2000	FL	
		Rally L/C (All Models)	1996 - 2000	FR	RR
		Sonic (All Models)	1998 - 2008	FL	
	50	Area 51	1998 - 2002	FL	RR
	50	Habana/Habana Custom	1999 - 2002	FL	
	50	Mojito Custom (110mm Ø rear drum)	2004 - 2012	FL	
	50	Mojito Custom (120mm Ø rear drum)	1999 - 2003	FL	
	50	Mojito Retro (120mm Ø rear drum)	1999 - 2003	FL	
	50	Scarabeo (2T) (H2/HL) Front disc Model	1993 - 1997	FL	
	50	Scarabeo (2T) (PF0100) (Rear Drum Model)	1998 - 1999	FL	
	50	Scarabeo (2T) (Rear disc model) (PFG00/TH000)	2000 - 2005	FL	
	50	Scarabeo (2T) Rear Disc Model) (PF0100)	1998 - 1999	FL	
	50	Scarabeo (4T) (TG000)	2002 - 2006	FL	
	50	Scarabeo (4T) (TGA00/TGB00)	2006 - 2009	FL	
	50	Scarabeo Ditech (2T) (SCA00)	2002 - 2006	FL	
	50	Scarabeo Street (2T) (TH00/THE00)	2005 - 2009	FL	
	50	Sonic (All Models)	1998 - 2008	FL	
	50	Scarabeo (2T) (Rear drum model) (PFG00/TH000)	2000 - 2005	FL	
SR	50	(LC)	1994 - 1996	FL	
SR	50	A/C (GP/LB/LF)	1993 - 1996	FL	
SR	50	Ditech (LC)(RLD100)	2002 - 2003	FL	
SR	50	H20 (Ditech) (RLA1/RLB1)	2000 - 2003	FL	
SR	50	R Factory (LC/2T)(VFB00/VFD00)	2004 - 2018	FL	
SR	50	R SBK Alitalia (Replica) (LC)	2010 - 2011	FL	
SR	50	Stealth/Racing (LC) (MZC0)	1997 - 1999	FL	
SR	50	Street (LC/2T) (TE00/TEA00)	2003 - 2015	FL	
SR	50	WWW (A/C) (LYH100)	1997 - 2001	FL	
	125	Leonardo	1996 - 1998	FL	RR
	150	Leonardo	1997 - 1998	FL	RR

ATALA

		Hacker	1997 - 1997	FL	
		Hacker LC	1997 - 1997	FL	
		Hacker Racing	1997 - 1997	FL	
AT10	50	Byte	1997 - 2000	FL	

BENELLI

491		All rear drum models	1998 - 2004	FL	
491		Scooter (all rear disc models)	1999 - 2004	FL	
	50	Mala (2T)	2013 - 2013	FL	
	50	Naked	2002 - 2003	FL	
	50	Pepe (4T) (7 spoke cast wheels)	2012 - 2016	FL	
	50	Pepe (2T) (7 spoke cast wheels)	1999 - 2001	FL	
	50	Pepe (5 spoke cast wheel) (2T)	2010 - 2014	FL	
	50	Pepe Classic (7 spoke cast wheels) (2T)	2007 - 2014	FL	
	50	Pepe LX (7 spoke cast wheels) (2T)	2003 - 2009	FL	
K2	50	LC	1999 - 2001	RR	
K2	50	Namur	1999 - 2001	RR	
K2	50	Scooter	1998 - 2001	FL	
	100	Naked	2002 - 2002	FL	
	100	Pepe LX	1999 - 2002	FL	
K2	100		1999 - 2001	FL	
	125	Adiva	2001 - 2004	FL	
	125	Velvet	1999 - 2007	FL	RR
	150	Adiva	2001 - 2004	FL	
	150	Velvet	1999 - 2007	FL	RR

BETA

	50	Ark (A/C Models)	1996 - 2014	FL	
	50	Ark (LC Models)	1997 - 2014	FL	RR
	50	Quadra	1997 - 2002	FL	
	50	Tempo	1998 - 2002	FL	

CAGIVA

	50	Nuvola	2000 - 2000	FL	
	125	Nuvola	2000 - 2000	FL	

GARELLI

	50	FLO		FL	
	250	Skynet	2002 - 2002	RR	
	400	Skynet	2002 - 2002	RR	

GENERIC

	50	Onyx (2T/4T)	2010 - 2018	FL	
	50	Pandora (2T/4T)	2013 - 2018	FL	

GILERA

	50	DD/SP Runner SP/Pujeret	1999 - 2004	FL	
	50	Easy Moving	1995 - 1996	FL	
	50	Ice	2001 - 2003	FL	

PART NUMBER

107

AD | S3

	50	Runner	1998 - 1998	FL	
	50	Stalker	1997 - 2006	FL	
	50	Storm	1994 - 1995	FL	
SKP	50		1999 - 2001	FL	
	125	Typhoon	1995 - 1998	FL	
	125	Typhoon X-XR	1999 - 2000	FL	
GOCCIA (ELECTRIC SCOOTERS)					
GO		T 1-4	2013 - 2014	FL	
GOVECS (ELECTRIC SCOOTERS)					
GO		S 1-2	2011 - 2014	FL	
GO		S 1-4	2011 - 2014	FL	
GO		S 2-4	2011 - 2014	FL	
GO		S 3-4	2011 - 2014	FL	
GO		T 1-2	2011 - 2014	FL	
GO		T 2-4	2011 - 2014	FL	
GO		T 3-4	2011 - 2014	FL	
HONDA					
SFX	50	S/T/V/W/X/Y/1	1996 - 2004	FL	
SGX	50	V/W/X/Y/1 Sky/Sky Deluxe	1997 - 2003	FL	
SH	50	T Fifty/Scoopy W/X/Y/1	1997 - 2003	FL	
SRX	50	W/SW/X/SX	1998 - 1999	FL	
SZX	50	(X8R-S) SW/SX/SY/S1 "Supersport Scooter"	1998 - 2004	FL	
SZX	50	(X8R-X) XW/XX/XY/X1 "Cross Sport Scooter"	1998 - 2004	FL	
SH	100	T/W/X/Y/1 Scoopy	1996 - 2001	FL	
ITALJET					
	50	Formula	1998 - 2000	FL	RR
	50	Formula (FR50/H088)	1994 - 1998	RR	
KEEWAY					
	50	Goccia (2T/4T)	2008 - 2015	FL	
MALAGUTI					
		Ciak (Electrical power)	2000 - 2005	FL	
F10		Jetline WAP	2006 - 2010	FL	
F10		Tribal	2008 - 2010	FL	
F12		Phantom (A/C)	2002 - 2008	FL	
	50	Ciak	2000 - 2004	FL	
	50	Ciak (4T) Master	2004 - 2008	FL	
	50	Ciak Twin Disc	2000 - 2003	FL	
F10	50	Jetline	1994 - 1997	FL	
F12	50	Phantom	1998 - 2002	RR	
F12	50	Racing Life	2003 - 2007	FL	RR
F12	50	Tyre Track	2003 - 2007	FL	RR
F12R	50	Phantom A/C	2007 - 2011	FL	
F12R	50	Phantom L/C	2007 - 2011	FL	RR
F15	50	Firefox (Air Cooled Models)	1999 - 2008	FL	RR
F15	50	Firefox (Liquid Cooled Models)	2001 - 2008	FL	RR
F15	50	RR	1999 - 2001	RR	
F69	70	Phantom	1998 - 1998	FL	
	100	Ciak	2000 - 2004	FL	RR
F12	100	Phantom (All liquid cooled models)	1999 - 2007	FL	RR
F18	150	Warrior	2000 - 2003	FL	
MBK					
	50	Equalis	1996 - 1996	FL	
CS	50	Mach G AC (Air Cooled)	2002 - 2010	FL	
CS	50	Mach G LC (Liquid Cooled)	2003 - 2010	FL	
CW	50	Booster (10"wheels)	2009 - 2010	FL	
CW	50	Booster (12"wheels)	2006 - 2010	FL	
CW	50	Booster Naked (10" wheels)	2006 - 2010	FL	
CW	50	Booster R Road	1994 - 1995	FL	
CW	50	Booster Spirit	1996 - 1998	FL	
CW	50	Booster Spirit	1999 - 2006	FL	
CW	50	Evolis	1997 - 1997	FL	
CW	50	Fizz	1993 - 1997	FL	
CW	50	Naked Booster (12"wheels)	2009 - 2010	FL	
CW	50	Power Rocket	2006 - 2006	FL	
CW	50	RS Booster Naked	2004 - 2008	FL	
CW	50	RS Booster NG	1995 - 1998	FL	
CW	50	RS Booster NG	2001 - 2006	FL	
CW	50	RS Booster Spirit	1999 - 2006	FL	
CW	50	RSP Rocket	1997 - 2000	FL	
CW	50	RSX Booster Track	1996 - 1998	FL	
YA	50	R Forte	1994 - 1995	FL	
YE	50	Evolis	1992 - 1995	FL	
YH	50	Flipper	1998 - 2010	FL	
YM	50	Fizz	1994 - 1995	FL	
YN	50	Ovetto (4T)	2009 - 2010	FL	
YN	50	R Ovetto (2T)	1998 - 2010	FL	
YQ	50	Nitro	1997 - 2010	FL	
YQ	50	Nitro Naked	2006 - 2010	FL	
CV	80	Evolis	1997 - 1997	FL	
YN	100	Ovetto	1999 - 2003	FL	
YQ	100	Nitro	2001 - 2002	FL	
XN	125	/150 Doo Do	2000 - 2005	FL	
MOTRON					
	50	Sting	1998 - 1998	FL	
	50	Syncro	1998 - 1998	FL	
	50	Thunder	1998 - 1998	FL	
PEUGEOT					
	50	Buxy/Buxy RS	1994 - 1997	FL	
	50	Ludix Pro (4T/14" wheels/J.Juan Caliper)	2011 - 2013	FL	
	50	Zenith L (All Models)	1996 - 1999	FL	
PGO					
	50	My Bubu	2003 - 2003	FL	
	50	Rodo Show	2000 - 2009	FL	
	90	Rodoshow	2000 - 2006	FL	
PIAGGIO VESPA					
	50	Free	2002 - 2002	FL	
	50	Storm	1994 - 1995	FL	
	50	Typhoon (2T) (Heng Tong caliper/10" wheels)	2001 - 2009	FL	
	50	Typhoon (2T) Grimeca Caliper / 10" Wheels	2000 - 2004	FL	
NRG	50	RST "MC" (Rear Drum Models)	1996 - 1997	FL	
NRG	50	(DD/DT) "MC2" (Rear Drum Models)	1998 - 1998	FL	
NRG	50	RST "MC2" (Rear Disc Models)	1998 - 1998	FL	
NRG	50	Extreme (Rear Disc Models)	1999 - 2001	FL	
NRG	50	Extreme (Rear Drum Models)	1999 - 2001	FL	
NRG	50	MC3 DD	2001 - 2005	FL	
Zip	50	Base (Disc Model)	1995 - 1996	FL	
ZIP	50	Elettrico	2002 - 2002	FL	
ZIP	50	Fast Rider	1993 - 1997	FL	
	100	Free	2002 - 2002	FL	
	125	Hexagon	1994 - 1995	FL	
	125	Typhoon	1999 - 2003	FL	
	150	Hexagon	1994 - 1997	FL	
QUADRO					
	350	4	2014 - 2015	FL	FR
	350	D	2011 - 2015	FL	FR
	350	S	2013 - 2015	FL	FR
RIEJU					
RS	50	NKD (Scooter)	2013 - 2020	RR	
RS	50	Sport (Scooter)	2012 - 2020	RR	
SHE-LUNG					
	50	Racer	1996 - 1996	FL	
SUZUKI					
AP	50	R/S/T/V/W	1996 - 2002	FL	
AY	50	V/WV/W/WW/WRW/WRX/WX/WRY/WRJ1/WRJ2/WRJ3/ WRJ4/K1/K2/K3 Katana (Grimeca Caliper)	1997 - 2004	FL	
UX	50	WX/WY Zillion	1999 - 2002	FL	
TOMOS					
MC	50	Senior Pro	2004 - 2004	FL	RR

AD | S3

PART NUMBER

107

YAMAHA

	50	Breeze	1995 - 1995	FL
BW'S	50	Next Generation (Twin Headlight Model) (190mm disc)	1999 - 2007	FL
BW'S	50	Original (180mm Disc)	1999 - 2002	FL
BW'S	50	R (5SX1)	2001 - 2001	FL
BW'S	50	Naked (1D11/2B71)	2003 - 2004	FL
BW'S	50	(5WW1)	2004 - 2004	FL
BW'S	50	(5WW4/6/8/9/B/D/F/H/K/M/P)	2005 - 2015	FL
BW'S	50	Naked (2B7B/D/F/H)	2009 - 2015	FL
CS	50	P/R Jog R	2002 - 2005	FL
CS	50	Jog R	2006 - 2015	FL
CS	50	Z (Jog RR)	2006 - 2012	FL
CW	50	RS (4YA1/2/BW's) (180mm front disc)	1996 - 1997	FL
CW	50	RSP (5CC1/3/4YA BW's Spy) (180mm front disc)	1997 - 1998	FL
CW	50	RS (5FXA/VGSA BW'S) (190mm Front Disc)	1999 - 1999	FL
CW	50	(5FXJ/VG5SA BW'S) (190mm Front Disc)	2000 - 2000	FL
CW	50	RS (5FXM/VG5SA BWS)(190mm front disc)	2001 - 2005	FL
CW	50	(5MS2/4G54R)	2002 - 2002	FL
CW	50	(5WW4/BWS)	2004 - 2007	FL
JOG-Z	50		1990 - 1990	FL
NS	50	Aerox (2T)	2013 - 2016	FL
NS	50	F Aerox 4	2014 - 2018	FL
NS	50	N Aerox Naked (2T)	2013 - 2016	FL
YA	50	Axis (4PC)	1995 - 1996	FL
YE	50	Zest	1993 - 1995	FL
YE	50	Zest (Italy)	1992 - 1992	FL
YFM	50	Breeze (4KH)	1994 - 1995	FL
YH	50		1998 - 1998	FL
YH	50	Why	1999 - 2009	FL
YM	50	Breeze (4RC/G929)	1994 - 1994	FL
YN	50	R Neos (5AD/5MR/5RN3)	1997 - 2002	FL
YN	50	Neos (5RN/1P9)	2002 - 2006	FL
YN	50	Neos (2T) (F5C2/IH5C2)	2007 - 2016	FL
YN	50	Neos (4T) (5C3)	2009 - 2018	FL
YQ	50	Aerox R / Aerox	1997 - 2016	FL
YE	80	Zest (Italy)	1993 - 1995	FL
YN	100	Neos	2000 - 2003	FL
YQ	100	Aerox	2000 - 2004	FL
XN	125	Teos	2001 - 2003	FL
CP	250	(1B71) Maxam / Morphus	2005 - 2006	FL

EQUIVALENTS OEM

119 439 00	119 468 00	119 502 00	2525370000	2525240000	59300 09820	59300 35810
59330 09EF0	59330 35E00	06455 GBM 750	06455 GCM 900	06455 GBY 910	3YK W0045 01	4CU F5811 20
4CU W0045 00	4VV F5811 00	5ME FS811 00	5MF F5811 00	5RW FS811 00	811 3638	811 3644
811 3663	821 3192	821 3245	821 3246	498408	R434 2009 1A0	R434 2021 1A0
R444 2004 1A0	752667	498454	821 3223	821 3571	821 3590	821 3638
647172	45120 J4A T000	PE 759057	1PH F5806 00	QCA 0648860000		

PART NUMBER

108

AD	K5	K5-LX	S3	S33 RACING

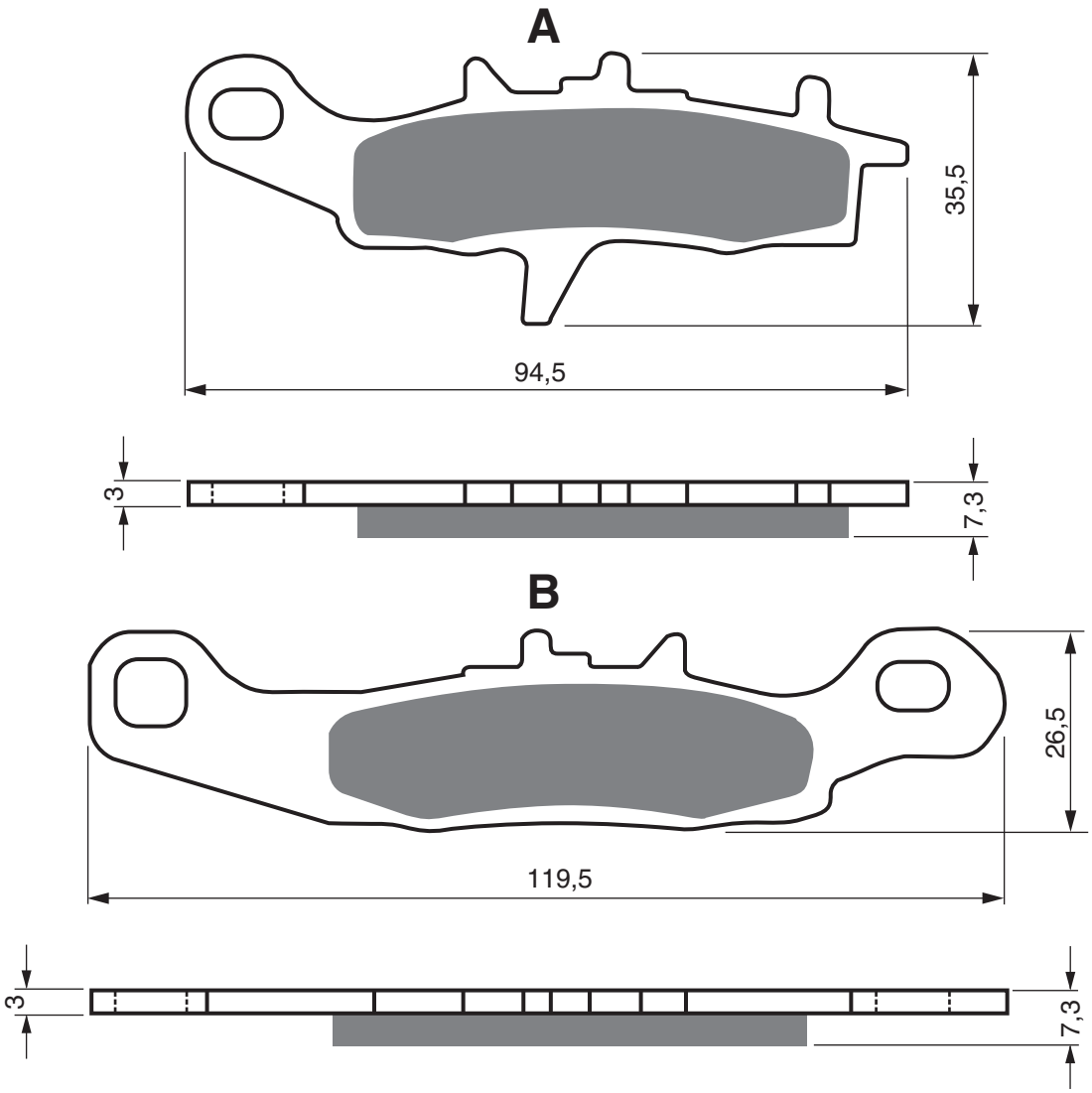

KAWASAKI

KX	80	R7/W1/W2/W3	1997 - 2000	FL
KX	85	(FR 17"/RR 14")	2001 - 2021	FL
KX	85	(FR 19"/RR 16")	2001 - 2021	FL
KX	100	B7/C1/C2/C3	1997 - 2000	FL
KL	250	G1/G1A Super Sherpa	1997 - 2000	FL
KL	250	J1-J3 Stockman	2000 - 2002	FL
KLX	250	H1 Super Sherpa	1998 - 1998	FL
KFX	450	R Quad (KSF 450 B8F/B9F/BAF/BBF/BCS/BDF/BEF)	2008 - 2014	FR
KVF	650	A1/A2 Prairie	2002 - 2003	FR
KVF	650	D1/D6F/D7F/D8F/D9F/DAF/DBF Brute Force 4x4	2005 - 2011	FR
KVF	650	E1/E6F/E7F/E8F/E9F Brute Force 4x4 Hardwoods Green HD	2005 - 2009	FR
KSV	700	A1/A2/A6F/A7F/A8F/A9F/ABF (KFX 700) V-Force	2004 - 2006	FR
KVF	700	A1/A2/A7F/A8F/B1/B2/B6F 4x4 Prairie	2004 - 2008	FR
KVF	700	D1 Team Green	2005 - 2005	FR

SUZUKI

RM	85	K5/K6/K7/K8/K9/L0/L2/L5/L6/L7 (Small 17" FW / 14" RW)	2005 - 2020	FL
RM	85	LK5/LK6/LK7/LK8/LK9/LL0/LL2/LL5/LL6/LL7 (Big 19" FW / 16" RW)	2005 - 2021	FL
RM	100	K3	2003 - 2003	FL

EQUIVALENTS OEM

43082 1196	43082 1206	K4308-21196	59301 03820

AD	K5	K5-LX	S3	S33 RACING

PART NUMBER

109

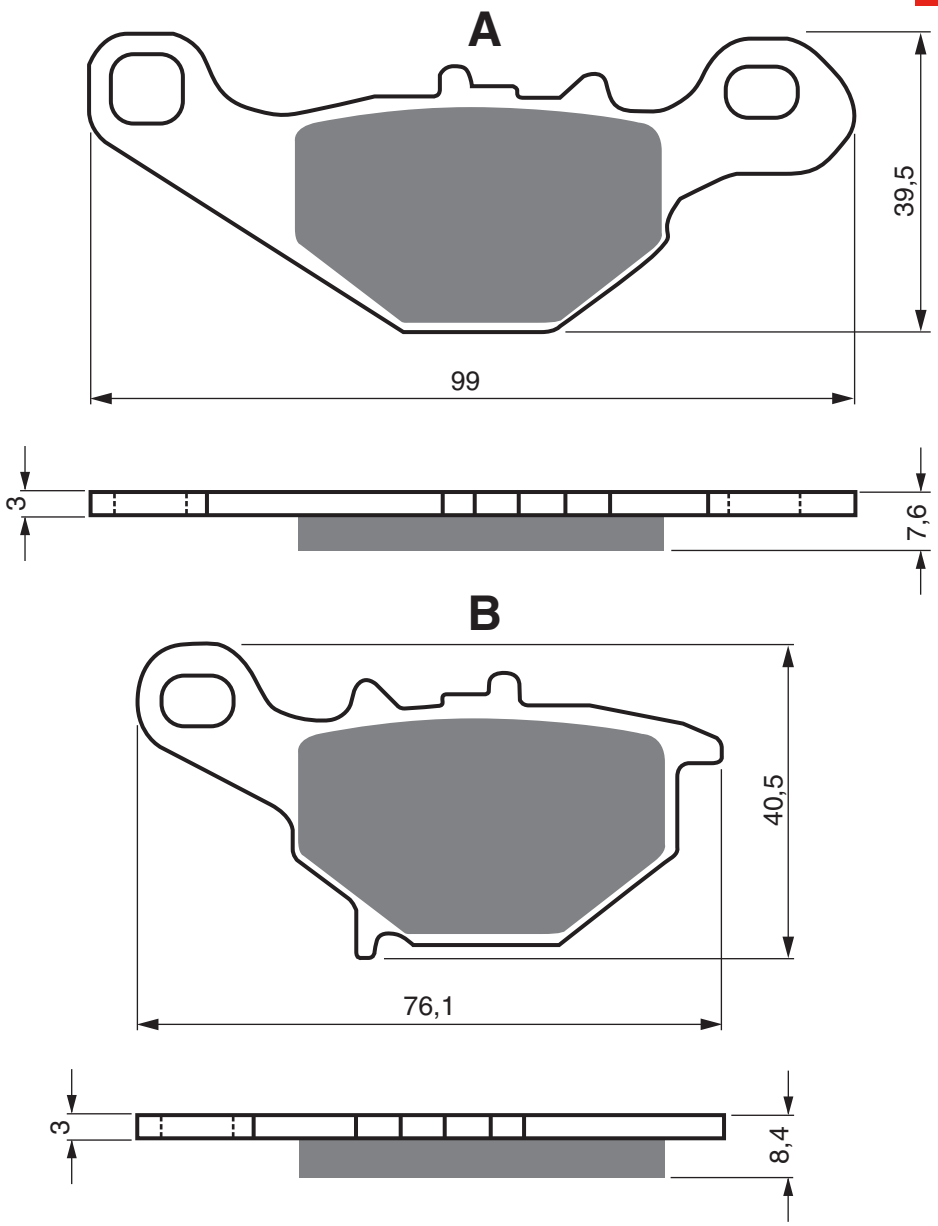

KAWASAKI

KLX	125	L (B1/B2/B3/B6F)	2003 - 2006	FL
KMX	125	B2-B12 (From E/No MX AE 013437)	1987 - 2003	FL
SC	150	A1 (Epsilon 150)	2002 - 2003	FL

SUZUKI

AZ	50	RY/RK2 (ZZ Inch Up Sport)	2000 - 2002	FL
TR	50	SW/SX	1998 - 2000	FL
RM	80	T/V/W/X/Y/K1	1996 - 2001	FL
RM	85	K2/LK2/K3/LK3/K4/LK4	2002 - 2004	FL
UG	110	W/SW/Y/SY/SK1 Hokuto/Address	1998 - 2002	FL
UK	110	L5/L6/L7/L8 Address	2015 - 2018	FL
AN	125	S/T/V/W/XX	1994 - 2000	FL
DR-Z	125	LK3/LK4/LK5/LK6/LK7/LK8/LK9/LL0-LL9	2003 - 2020	FL
UC	125	X/Y Epicuro	1999 - 2002	FL
UZ	125	K5/GK5 (CF46A) (V126G)	2005 - 2005	FL

EQUIVALENTS OEM

59300 03880	59300 3891	43082 S005	43082 S015

PART NUMBER

110

AD | S3

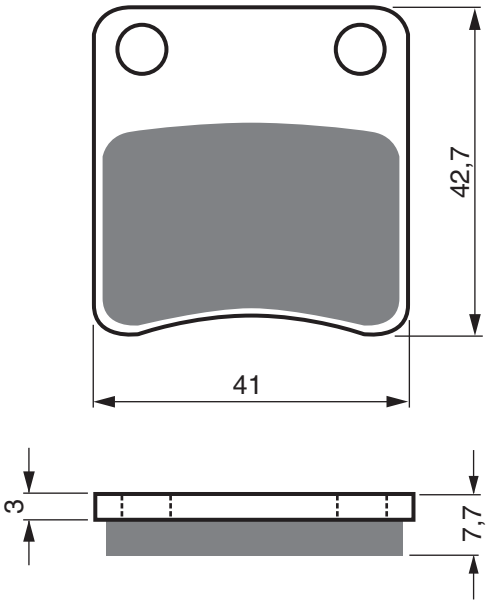

BRANSON

BS	125	Boolevard	2008 - 2008	FL
BS	125	Snooker	2008 - 2008	FL

CAGIVA

	50	City	1992 - 1994	FL

DAELIM

	50	E-Five (SJ50A)	2003 - 2006	FL
	50	S'Five (SJ50)	2001 - 2012	FL
GZ	50	Message	1997 - 2002	FL
SE	50	C Bonita	2009 - 2012	FL
SE	50	R Cordi	2005 - 2012	FL
	100	Delfino (SH100)	2001 - 2004	FL

GARELLI

	125	Panther	2002 - 2002	FL
	150	Panther	2002 - 2002	FL
	250	Panther	2002 - 2002	FL

HONDA

	50	Tact		FL
SK	50	MM-II/MM-YD/MP-II (AF28) Dio SR		FL
SK	50	MM-III/MP-III/MP-IV (AF28) Dio ZX		FL
SK	50	MMR-II/MMT-II (AF28) Dio- XR		FL

SYM

	50	City Hopper	1999 - 2002	FL
	50	Orbit	2008 - 2009	FL
	50	Super Fancy	1996 - 2002	FL
	125	Orbit	2008 - 2009	FL

EQUIVALENTS OEM

45105 GZ0 ACA	45112 GZ0 315	Y00 FA0112	45105 G22 000 AC	45105 G02 000	45105 SE5 5001E	45105 GAZ 5000 EU
45105 GAZ 9800	45105 SE5R 00M4					

AD | S3

PART NUMBER

111

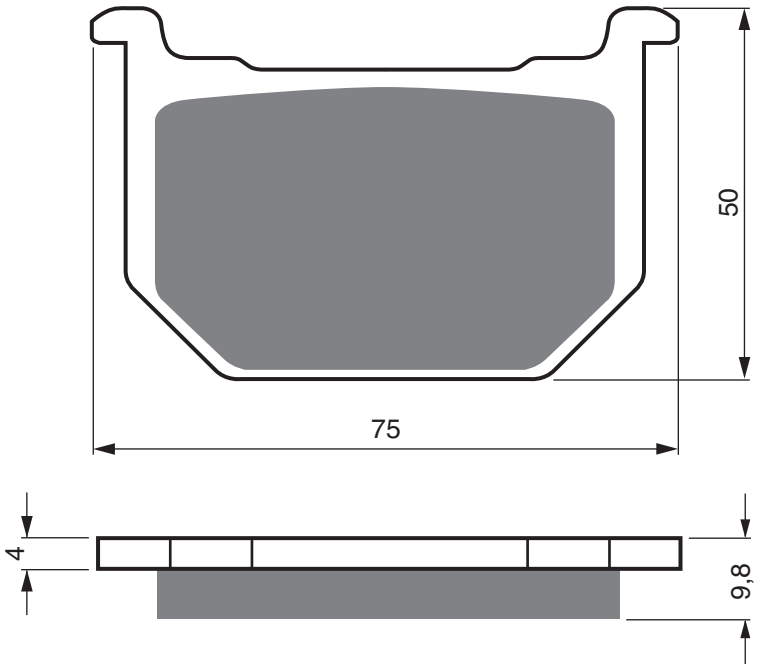

SUZUKI

GSX	1 100	S Katana (SL/SSL/SR)	1990 - 1993	FL

PART NUMBER

113

AD | S3

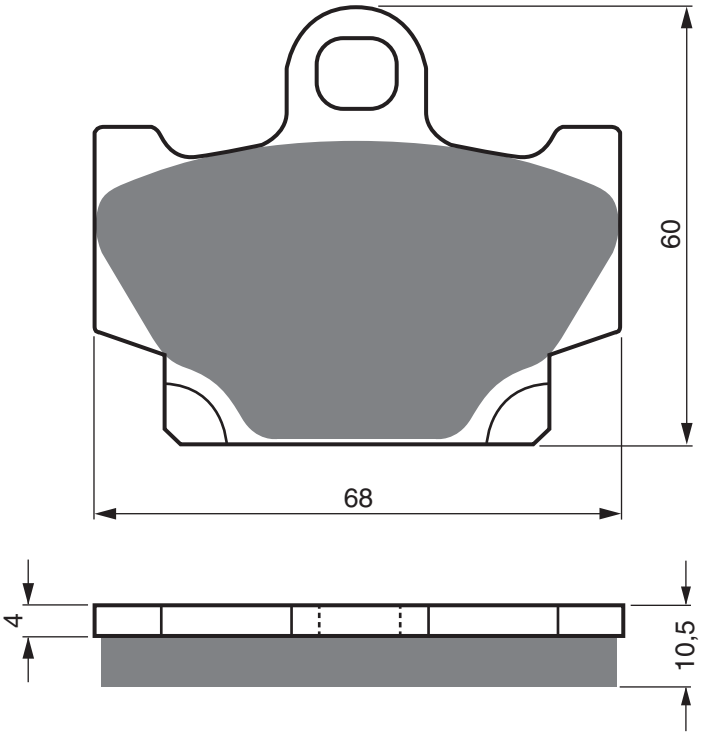

YAMAHA

DT	80	LC (37A)	1981 - 1984	FL	
RD	80	LC	1982 - 1982	FL	
RX	100		1984 - 1984	FL	
RX	115	(5FS3)	1999 - 1999	FL	
RD	125	LC	1982 - 1984	FL	
SR	125	SE	1992 - 1996	FL	
RX	135	(13X)	1981 - 1981	FL	
XV	240	Virago	1992 - 1992	FL	
RM	250	R (29L)		FL	
RZ	250	R (29L)		FL	FR
SR	250	Classic (21L)	1996 - 2000	FL	
XV	250	Virago	1989 - 1994	FL	
RD	350	YPVS	1983 - 1984	FL	FR
XS	400		1982 - 1982	FL	
XT	500	Austria	1983 - 1983	FL	
XV	500	SE (26R/D098)	1983 - 1988	FL	FR
XZ	550		1982 - 1984	FL	
XT	600		1984 - 1986	FL	
XT	600	Z "Tenere"	1984 - 1984	FL	
XJ	650	LK Seca	1983 - 1983	FL	FR
XJ	650	Turbo	1982 - 1982	FL	FR

EQUIVALENTS OEM

11H W0045 00	11H W0045 01	11H W0045 11	11L W0045 00	11U W0045 00	11U W0045 10	22U W0045 10
29L W0045 00	29L W0045 10	2KJ W0045 00	2UJ W0045 00	2UJ W0045 01	34L W0045 10	43F W0045 00
43F W0045 01	4X8 W0045 00	52R W0045 00	5R2 W0045 00	3XL W0045 00		

AD	K5	S3	S33 RACING

PART NUMBER

114

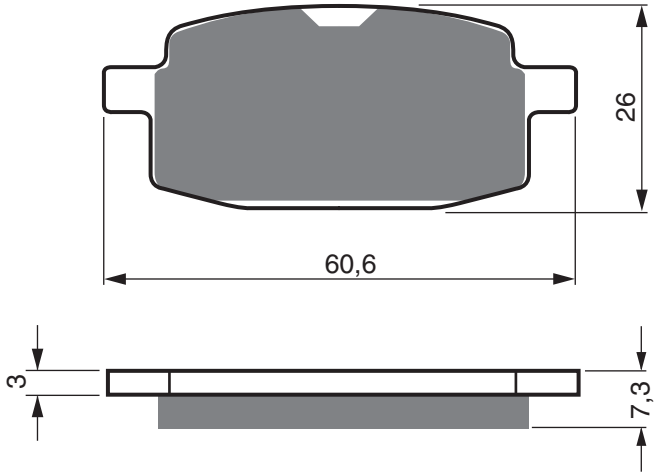

ADLY

		City Bird		FL	
	25	Silver Fox	2000 - 2005	FL	
	50	Cat	2001 - 2001	FL	
	50	Fox	2000 - 2000	FL	
	50	Fox Plus	2001 - 2001	FL	
	50	Pista	1996 - 1999	FL	
	50	Road Tracer	2004 - 2006	FL	
	50	Silver Fox	2000 - 2005	FL	
	70	Fox Plus	2001 - 2005	FL	
	70	Pista	2001 - 2005	FL	
RT	90	Road Tracer	2002 - 2006	FL	
	100	Cat	2001 - 2008	FL	
	100	Road Tracer	2004 - 2006	FL	
	100	Silver Fox	2001 - 2005	FL	
RT	100	Road Tracer	2002 - 2006	FL	
	125	Cat	2001 - 2008	FL	

BAOTIAN

BT	50	QT-11 Retro (4T)	2006 - 2011	FL	
BT	50	QT-9 Speedy (4T)	2010 - 2011	FL	

BETA

R	125	4T Mini Cross		FL	

BS VILLA

AX	50		1993 - 1993	FL	
GZ	50		1993 - 1993	FL	

DAELIM

DX	50	D Camper	2003 - 2003	FL	
M	50	D/MD Millenium	2003 - 2003	FL	
ST	90	Pro Monkey	2003 - 2003	FL	

FANTIC

	50	Grinta	1995 - 2000	FL	
	50	Leader	1995 - 1995	FL	
	50	Pony SR	1993 - 1993	FL	
	50	Queenie	1995 - 1995	FL	

FYM

CR	90	E	2006 - 2007	FL	
CR	110		2006 - 2007	FL	
CR	110	ESR	2006 - 2007	FL	
ES	110		2006 - 2007	FL	
	125	X Sport Typhon Quad	2006 - 2007	FL	FR
CR	125	R	2006 - 2007	FL	
CR3	125		2006 - 2007	FL	

GARELLI

	50	Capri (DF 50 QT-7)	2006 - 2006	FL	
	50	Ciclone	2007 - 2007	FL	
FX	50		2002 - 2002	FL	
LX	50	Capri	2006 - 2008	FL	
VIP	50		2008 - 2008	FL	

HERO

	50	Nipster	2006 - 2006	FL	

HYOSUNG

	50	Newtee (4T)	2014 - 2015	FL	

ITALJET

	50	Bazooka	1992 - 1997	FL	
	50	Cruise	1995 - 1995	FL	
	50	Pista 2	1992 - 1992	FL	
	50	Scoop	1993 - 1993	FL	
	50	Yankee 8	1994 - 1994	FL	RR

PART NUMBER

114

AD | K5 | S3 | S33 RACING

JORDAN					
	50	Easy	2003 - 2004	FL	
	100	Easy	2003 - 2004	FL	
KAWARA					
	50	Fever	1999 - 1999	FL	
	90	Fever	1999 - 1999	FL	
	90	Stinger	1999 - 1999	FL	
LEM					
		Four X Pro		FL	
	50	Flash	1994 - 1994	FL	
LEXMOTO					
	50	Molly (DFE50QT-3)	2015 - 2018	FL	
LIFAN					
LF	50	OGY		FL	
MALAGUTI					
DVD	50	Malbo Line (2T)	2010 - 2011	FL	
MBK					
CR	50	Z Target	1991 - 1995	FL	
CY	50	Forte/Forte Mufa	1996 - 1997	FL	
MOTO-ROMA					
	50	Bee	2004 - 2005	FL	
	50	Go-Go	1997 - 2005	FL	
	50	Road Runner	2001 - 2002	FL	
	50	Scrambler	2001 - 2001	FL	
	50	Stinger	2001 - 2005	FL	
	100	Road Runner	2001 - 2002	FL	
	110	Go-Go	2001 - 2002	FL	
	125	Grand Prix	2001 - 2001	FL	
MZ					
FB	50	Moskito	1997 - 2003	FL	
JP	50	Moskito	2000 - 2003	FL	
SX	50	Moskito	2000 - 2003	FL	
PETERSON					
	50	Hurricane	1995 -	FL	
SR	50	Racing	1995 -	FL	
	80	Hurricane	1995 -	FL	
SR	80	Racing	1995 -	FL	
PEUGEOT					
	50	V-Clic (4T) (155mm dia. disc)	2008 - 2013	FL	
	50	V-Clic (4T) (160mm dia. disc)	2008 - 2011	FL	
PGO					
EPS			1997 - 1997	FL	
	50	Big Max	1994 - 2006	FL	
	50	Comet	1993 - 1993	FL	
	50	Hot	1997 - 1997	FL	
	50	Tornado	1997 - 1997	FL	
	80	Big Max	1994 - 1994	FL	
	90	Big Max	1997 - 1997	FL	
	90	Tornado	2000 - 2000	FL	
	100	Big Max	1996 - 1996	FL	
PMX	110		2000 - 2000	FL	
	125	Kung Fu		RR	
	125	Tornado	1996 - 1996	FL	
	125	Tornado	1997 - 1997	FL	
QUADZILLA					
WK	70	(Front disc model)	2006 - 2009	FL	FR
WK	110		2006 - 2008	FL	FR
WK	125		2006 - 2009	FL	FR
SHE-LUNG					
	50	Falcon	1997 - 1997	FL	
	125	Mars	1997 - 1997	FL	
SIAMOTO					
		Favorite	2002 - 2004	FL	
	50	Birdie	2002 - 2004	FL	
SINNIS					
QM	50	QT-2T Falcon	2008 - 2010	FL	
QM	50	QT-6A Jet	2008 - 2010	FL	
SULA					
	50	City Bird	1999 - 1999	FL	
SUPERBYKE					
	50	M-Ped Road Classic		FL	
TERRA MOTO					
TDX	125	F	2007 - 2007	FL	RR
TDX	125	F Krusha	2007 - 2007	FL	RR
TDX	125	F Street Rippa	2007 - 2007	FL	RR
THUMPSTAR					
	90	Thumpstar Junior	2004 - 2006	FL	
	110	Thumpstar Supa	2004 - 2006	FL	
	125	Thumpstar Expert	2006 - 2006	FL	
	125	Thumpstar Pro	2005 - 2006	FL	
	125	Thumpstar Road Ripper	2006 - 2006	FL	RR
VIALLI					
	50	Cargo	2006 - 2006	FL	
	50	Jupiter	2006 - 2006	FL	
FXR	50	Sport	2006 - 2006	FL	
WUYANG					
WY	50	QT	2006 - 2007	FL	
YAMAHA					
	50	Axis Pro Foot	1992 - 1992	FL	
CR	50	Target	1991 - 1991	FL	
CR	50	Z (4FW/-)	1992 - 1992	FL	
CR-Z	50	(3WN)	1991 - 1995	FL	
CY	50	RS Jog R	1996 - 1996	FL	
JOG	50	(Spain)	1988 - 1988	FL	
JOG-Z	50		1988 - 1989	FL	
RS	50	Champ	1988 - 1988	FL	
YA	50	ZA Jog Z (4SC1)	1995 - 1995	FL	
YE	50	Zest (Japan) (4FW/G392)	1992 - 1992	FL	
YE	80	Zest (Japan) (4MU/G699)	1993 - 1993	FL	
BW	100	S	2000 - 2000	FL	
YW	100	T Booster BWs	1996 - 1996	FL	

EQUIVALENTS OEM

2NA W0045 01	5CP W0045 00	45120 107 000	3XG W0045 00	5JU W0045 00	802 567 1000	T01H000101
64098800	140330					

AD | S3

PART NUMBER

115

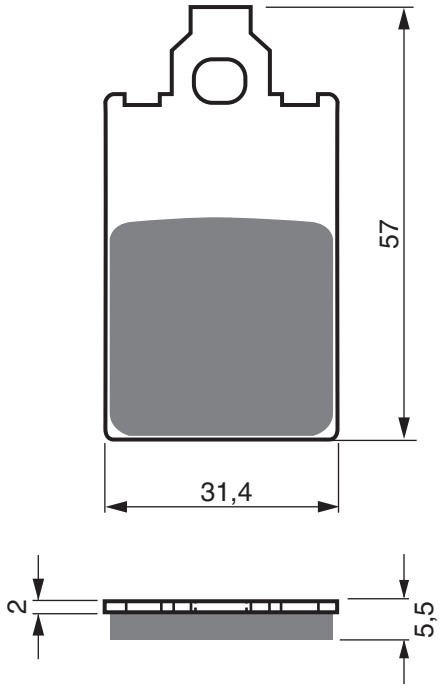

ACCOSSATO				
	50	Enduro Codice	1989 - 1989	RR
CE	50		1987 - 1987	RR
CE	80		1987 - 1987	RR
KR	80		1987 - 1987	RR
APRILIA				
	50	Classic	1992 - 2001	FL
	50	Europa	1990 - 1992	FL
AF1	50	Futura	1990 - 1992	FL
BETA				
		Tempo	1998 - 1998	FL
RK6			1993 - 1996	RR
	50	Tempo (16" wheels)	1994 - 1997	FL
TR34	125		1988 - 1988	RR
TR34	250		1986 - 1988	RR
FANTIC				
	50	50.1 Oasis	1986 - 1986	FL
	50	50.1 Oasis KS / Rally	1987 - 1987	FL
	50	Fast		FL
	50	Oasis E.S.	1987 - 1987	FL
GARELLI				
	50	Sahel	1991 - 1991	FL
	80	Sahel	1991 - 1991	FL

KTM				
G0	50	(KTMG050/G812)	1994 - 1994	FL
MALAGUTI				
	50	Centro Base		FL
	50	Centro SL/SL Cat	1994 - 2000	FL
	50	Yesterday	1998 - 2003	FL
CR-1	50	Crosser	1995 - 1998	FL
F12	50	Phantom	1994 - 2003	FL
F15	50	Firefox	1996 - 2000	FL
MLX	50	Enduro	1987 - 1987	FL
PEUGEOT				
SV	100	L	1997 - 1998	FL
PIAGGIO VESPA				
	50	Free (Disc Model)	1995 - 2000	FL
	50	Free - Delivery	2000 - 2001	FL
TOMOS				
		Streetmate	2005 - 2005	FL
		Streetmate R		FL
	50	Revival/Revival TS	2003 - 2004	FL
	50	Streetmate	2003 - 2004	FL
YAMAHA				
DR	50	R-L (SM-5VB1/VG55BK)	2002 - 2003	FL
DT	50	R	1997 - 2001	FL

EQUIVALENTS OEM

119 363 00	5BK F5811 00	8213145	498840	119468000	119419000	752817
2525250000	8213145	07010R				

PART NUMBER

116

S3	S33 RACING	GP6	GP5	GP7	GPR

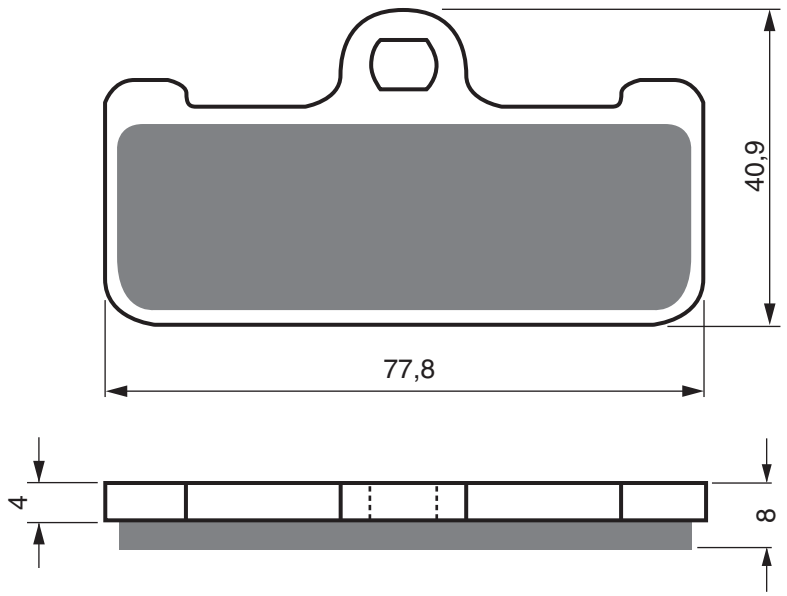

BREMBO RACING CALIPERS

X1017.40/41 - 4 Piston / 40mm Axial Monobloc	FL
XA3.B8.30/31 - 4 Piston P32/36 Radial Mount Caliper @ 108mm Spacing (Titanium Pistons)	FL
XA3.B8.60/61 - 4 Piston P32/36 Radial Mount Caliper @ 108mm Spacing (Aluminium Pistons)	FL
XA7G2.10/11 P4 32/36 Radial Monobloc 100mm Spacing	FL
XA7G2.40/41 - 4 Piston 100mm CNC Monobloc Race Caliper	FL

EQUIVALENTS OEM

107 A486 03	107 684830	M028Z04

AD	S3	S33 RACING	GP5	GP6	GP7	GPR

PART NUMBER

117

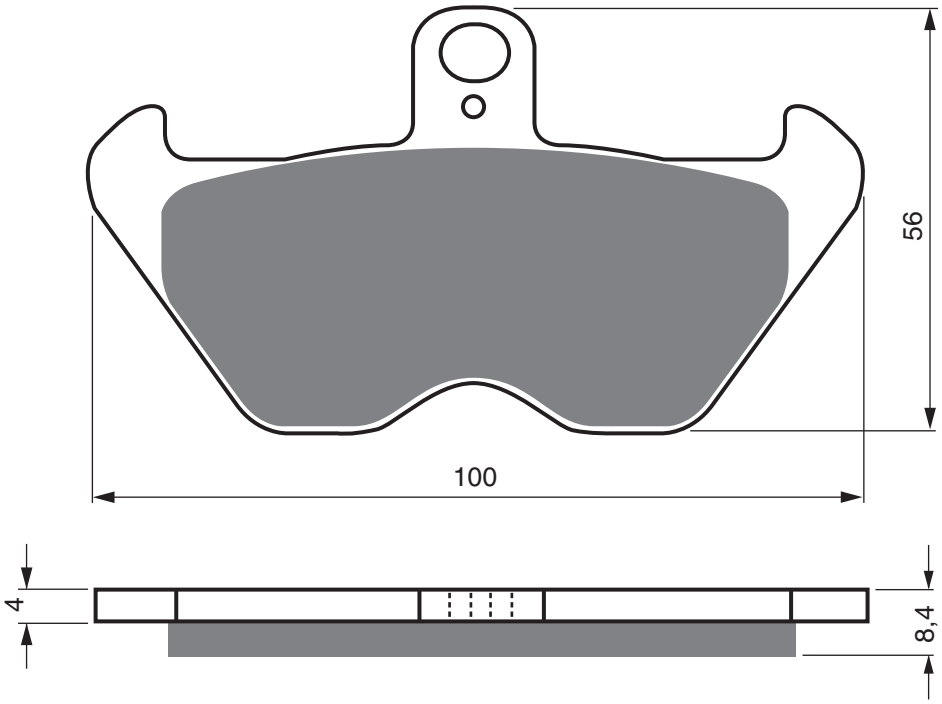

BMW

R80	800	Mystic	1994 - 1995	FL	FR
R80	800	R	1991 - 1994	FL	FR
R	850	C (Cast Wheel/ABS)	1997 - 2000	FL	FR
R	850	C (Spoke Wheel/ABS)	1996 - 2000	FL	FR
R	850	GS (Std & ABS Models)	1996 - 2000	FL	FR
R	850	R (Cast Wheel/ABS)	1994 - 2002	FL	FR
R	850	RT (Cast Wheel/ABS)	1996 - 2001	FL	FR
R	850	RT (Spoke Wheel)	1996 - 2001	FL	FR
K1	1 000	(16 Valve - ABS)	1988 - 1993	FL	FR
K1	1 000	(16 Valve - Non ABS)	1989 - 1993	FL	FR
K100	1 000	RS (16 Valve - ABS Models)	1989 - 1992	FL	FR
K100	1 000	RS (16 Valve - Non ABS)	1989 - 1992	FL	FR
R100	1 000	Mystic	1993 - 1996	FL	FR
R100	1 000	R	1991 - 1995	FL	FR
K	1 100	LT (ABS Model)	1989 - 1999	FL	FR
K	1 100	LT (Non ABS)	1989 - 1999	FL	FR
K	1 100	RS (ABS Model)	1992 - 1996	FL	FR
K	1 100	RS (Non ABS Model)	1992 - 1996	FL	FR
KL	1 100	LT	1989 - 1999	FL	FR
R	1 100	GS (STD & ABS)	1993 - 1999	FL	FR
R	1 100	R (Cast Wheel)	1993 - 2001	FL	FR
R	1 100	R (Spoke Wheel)	1993 - 1996	FL	FR
R	1 100	RS	1992 - 2001	FL	FR
R	1 100	RT (Cast Wheel/ABS)	1994 - 2001	FL	FR
R	1 100	RT (Spoke Wheel)	1994 - 2001	FL	FR
R	1 100	S (ABS)	1996 - 2000	FL	FR
R	1 150	GS (R21/0415/0495)	1998 - 2001	FL	FR
K	1 200	LT (Integral ABS & STD ABS Models)	1997 - 2000	FL	FR
K	1 200	RS (Non ABS & ABS Models)	1996 - 2000	FL	FR
R	1 200	(Independence/Cast Wheel)	2000 - 2002	FL	FR
R	1 200	(Independence/Spoke Wheel)	2000 - 2002	FL	FR
R	1 200	C (Cast Wheel/ABS)	1996 - 2002	FL	FR
R	1 200	C (Spoke Wheel/ABS)	1996 - 2002	FL	FR

EQUIVALENTS OEM

34 11 2 314 996	34 11 2 310 983	34 11 7 663 764	34 11 7 655 687	34 11 2 331 173	34 11 2 314 512	34 11 7 658 156
34 11 2 333 045						

PART NUMBER

118

AD | S3

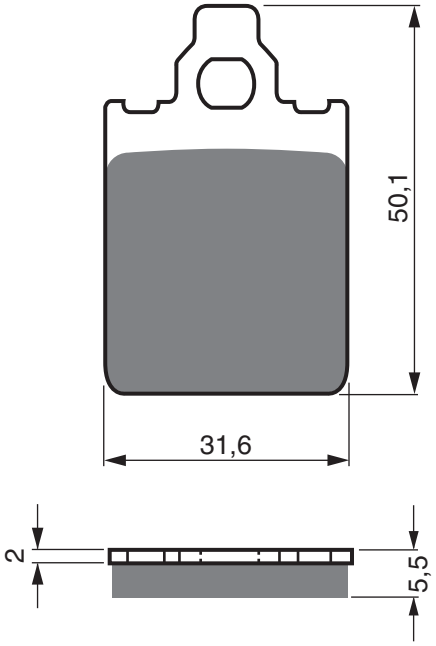

CAGIVA

50	Blues	1993 - 1995	RR
50	Prima	1992 - 1994	RR
50	Super City	1993 - 1995	RR
80	Prima	1992 - 1994	RR
80	Super City	1993 - 1995	RR

ITALJET

50	Formula (FR50/H088)	1994 - 1998	FL
80	Formula	1994 - 1994	FL
125	Formula (FR50/H088)	1994 - 1994	FL

LML

125	i Star (4T)	2010 - 2015	FL
125	Star (2T)	2010 - 2014	FL
125	Star Deluxe (2T) (Front disc)	2001 - 2003	FL
150	Star (2T)	2010 - 2014	FL
150	Star Deluxe (2T) (Front disc)	2001 - 2003	FL
151	i Star (4T)	2010 - 2015	FL
200	i Star (4T)	2010 - 2015	FL

PIAGGIO VESPA

	50	Quartz	1992 - 1996	FL
	50	Sfera RST	1995 - 1997	FL
LX	60	(Special Anniversary Model)	2006 - 2006	FL
	125	Skipper	1994 - 1997	FL
PX	125	(Disc Brake Model) (2T) (Up to 30/04/2011)	1998 - 2011	FL
PX	125	Touring (Disc brake model)	2015 - 2015	FL
	150	Skipper	1994 - 1997	FL
PX	150	(Disc Brake Model)	1998 - 2015	FL
PX	150	Touring (Disc brake model)	2015 - 2015	FL
PX	200	(Disc Brake Model)	1998 - 2007	FL

EQUIVALENTS OEM

494762	498414	800067127	C-4721834	647176

S3	GP5	GP6	GP7

1 set = 6 pcs

PART NUMBER

119

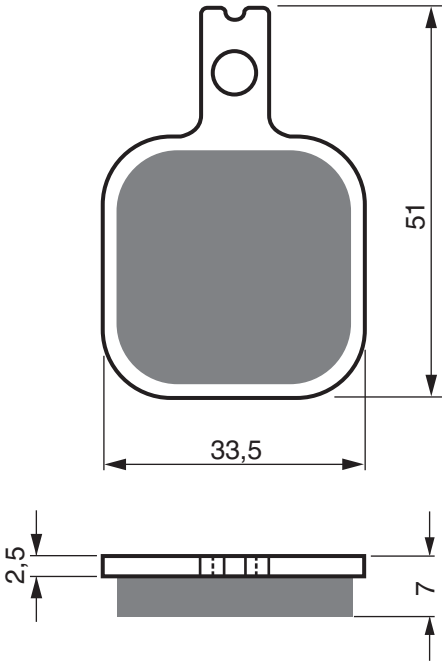

HARRISON BILLET

2 Piston (1296040)	FL
Mini 6	FL
Slim Design	FL

ISR

22-032 (6 Piston Large)	FL
22-042 (6 Piston Racing)	FL

EQUIVALENTS OEM

29-001	1296033	1296007

PART NUMBER

120

AD | S3

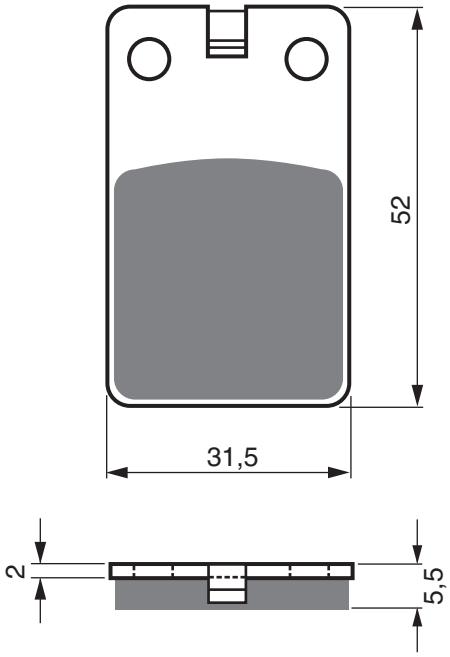

APRILIA

TRX	240	M	1989 - 1989	FL	RR

BENELLI

	50	Devil	1992 - 1992	RR	
	50	Spring	1993 - 1993	RR	
	80	Devil	1992 - 1992	RR	

BETA

TR32	125		1986 - 1987	FL	
TR33	125		1986 - 1987	FL	
TR33	240		1986 - 1988	FL	
TR34	250		1986 - 1988	FL	
TR34	260		1989 - 1991	FL	

FANTIC

	50	.1 Oasis Kick	1987 - 1987	FL	
	50	.1 Trial	1986 - 1986	FL	
	50	.1 Trial H 20	1987 - 1987	FL	
	125	/2 Trial	1987 - 1987	FL	RR
	125	Trial Progress 1	1987 - 1987	FL	
HP1	125	Strada	1985 - 1985	FL	
	201	/301 Monoshock	1986 - 1986	FL	
	201	Trial Progress 2	1987 - 1987	FL	
	241	Trial Progress 2	1987 - 1987	FL	
	243	Trial	1987 - 1987	FL	RR
	301	Trial	1985 - 1985	FL	
	301	Trial Progress 2	1987 - 1987	FL	
	303	Monoshock	1987 - 1987	FL	RR
	343	Trial Progress 2	1987 - 1987	FL	RR

GARELLI

	50	Tiger XLE	1986 - 1986	RR	

GILERA

	50	Built	1990 - 1990	FL	
	50	Eaglet	1996 - 1996	FL	
503	50	cc	1991 - 1991	FL	RR

JCM

		Trial	1987 - 1987	FL	
	125	Oxygene	1989 - 1989	FL	
	125	Week-End	1989 - 1989	FL	
	233	Vega	1988 - 1988	FL	
	240	Enduro	1991 - 1991	FL	
	240	Oxygene	1989 - 1989	FL	
	240	Week-End	1989 - 1989	FL	
	250	Week-End	1991 - 1991	FL	
	325	Oxygene	1989 - 1989	FL	
	325	Week-End	1989 - 1989	FL	
	333	Vega	1987 - 1987	FL	
	333	Vega	1988 - 1988	FL	

MALAGUTI

		Crosser CR1	1997 - 1997	FL	
F12		Phantom	1994 - 1998	FL	
	50	Enduro Dune	1987 - 1988	FL	RR
	50	Enduro RCX-W/Sahib	1983 - 1983	FL	
	50	Evolution	1991 - 1991	FL	
	50	Fifty Full/CX	1983 - 1983	FL	
	50	Fifty Top	1985 - 1985	FL	
	50	Raid	1991 - 1991	FL	
	50	RGT Sport	1985 - 1985	FL	
	50	RGT Strada	1983 - 1983	FL	
F12	50	Phantom	1994 - 1998	FL	
RST	50	Sport	1987 - 1987	FL	RR

MONTESA

H7	360	Enduro	1986 - 1986	FL	

TOMOS

BT	50	S	1989 - 1989	FL	
N	50	AT, BT	1991 - 1991	FL	
CTX	80		1989 - 1989	FL	

EQUIVALENTS OEM

266 07 6340	510 362 4 282	464143	11933400

AD | S3 | S33 RACING

PART NUMBER

121

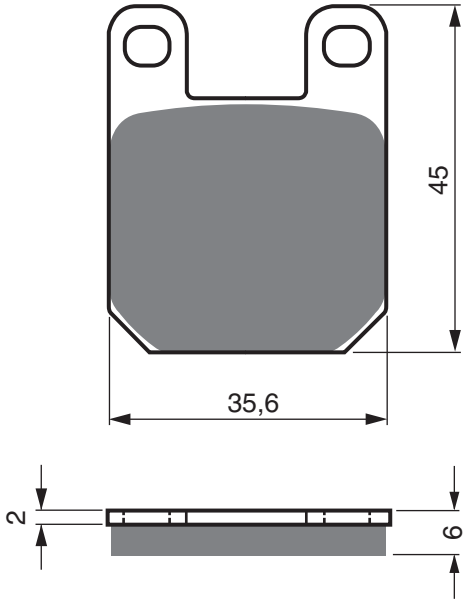

AJP					
PR4	200	Supermoto	2004 - 2009	RR	
ALFER					
MC	80		1987 - 1987	RR	
APRILIA					
RS	50	(Radial Caliper - 6 bolt fixing Front & Rear)	2006 - 2011	RR	
RX	50	Factory	2006 - 2020	RR	
SM	50		2011 - 2012	FL	RR
SX	50		2006 - 2020	RR	
SM	125		2011 - 2012	FL	RR
SX	125		2011 - 2012	FL	RR
TX	125		1986 - 1988	FL	
TX	240		1986 - 1988	FL	
SM	250		2011 - 2012	FL	
	280	Climber	1994 - 1996	FL	
	280	R Climber	1992 - 1993	FL	
TX	311		1986 - 1988	FL	RR
BETA					
		Gara	1993 - 1995	FL	
	50	Eikon	1999 - 2006	FL	RR
REV	50		2000 - 2008	FL	RR
RK6	50	Enduro	1997 - 2002	RR	
RR	50	Enduro	1999 - 2005	FL	RR
RR	50	Enduro	2004 - 2007	RR	
RR	50	Enduro Alu / Motard Alu	2004 - 2008	RR	
RR	50	Enduro Racing	2009 - 2011	RR	
RR	50	Enduro Standard	2009 - 2014	FL	
RR	50	Motard Standard	2009 - 2012	FL	
RR	50	Pro Race	1998 - 2004	RR	
RR	50	Standard	2005 - 2008	RR	
RR	50	Supermoto	1999 - 2005	FL	RR
	70	Minitrial (2T)	2013 - 2014	FL	RR
EVO	80	Junior	2009 - 2020	FL	RR
REV	80		2000 - 2007	FL	RR
	125	Eurotech	1996 - 1998	FL	RR
	125	Techno	1996 - 1998	FL	RR
ALP	125	(4T)	1998 - 2004	FL	RR
R	125	4T Mini Cross		RR	
RE	125	4T Enduro	2010 - 2014	FL	
TR34	125		1988 - 1988	FL	
TR34	125		1989 - 1989	FL	RR
ALP	200	(4T)	2000 - 2004	FL	RR
	250	Eurotech	1996 - 1998	FL	RR
	250	Techno	1996 - 1998	FL	RR
	260	Super Trial ST	1994 - 1994	FL	
	260	Synt	1992 - 1992	FL	
	260	Synt	1993 - 1995	FL	
	260	Techno	1995 - 1995	FL	
	260	Zero	1992 - 1992	FL	
BLATA					
	125	Enduro	2007 - 2008	RR	
	125	Motard	2007 - 2008	RR	
BULTACO					
	50	Lobito	1999 - 1999	RR	
SM	50	Astro		RR	
CAGIVA					
	50	Mito	1999 - 2000	RR	
	50	Progress	1997 - 1999	FL	
CH RACING					
WSM	50	Motard	2005 - 2005	RR	
WXE	50	Enduro	2005 - 2005	RR	
WSM	125	Motard	2005 - 2005	RR	
WXE	125	Enduro	2005 - 2005	RR	
CONTI					
RX	356	V3 (12" wheels)	2005 - 2006	RR	
RX	356	V3 (17" wheels)	2005 - 2006	RR	
CPI					
	50	Supercross	2003 - 2009	FL	RR
	50	Supermoto (Low level exhaust)	2006 - 2009	FL	RR
SM	50		2011 - 2012	FL	RR
SM	50	Black Tiger	2008 - 2009	FL	RR

PART NUMBER

121

AD | S3 | S33 RACING

SMX	50	Supermoto	2003 - 2009	FL	RR	
SX	50		2006 - 2007	RR		
SX	50		2011 - 2012	FL	RR	
SM	125		2011 - 2012	FL	RR	
SX	125		2011 - 2012	FL	RR	
SM	250		2009 - 2012	FL		
SX	250		2009 - 2012	FL		
DAELIM						
S	125		2003 - 2003	FL		
ST	125		2003 - 2003	RR		
DERBI						
	50	Atlantis (2T) Up to Ref No 8G253171 12"/5 Spoke Wheels/ 190mm 3-Bolt	2007 - 2007	FL		
	50	Atlantis (4T) (13" 3 Spoke Wheels)	2004 - 2006	FL		
	50	Atlantis (AC/2T)	1999 - 2002	FL		
	50	Atlantis Bullet (AC/2T)	2003 - 2005	FL		
	50	Atlantis City (AC/2T)	2003 - 2006	FL		
	50	Atlantis LC (4T)	1999 - 2001	FL		
	50	Atlantis Red Bullet (AC/2T)	2003 - 2003	FL		
	50	Atlantis Two Chic (AC/2T)	2005 - 2005	FL		
	50	Hunter	1996 - 1999	FL		
	50	Paddock (AC/2T)	1998 - 1999	FL		
	50	Predator (AC/2T)	1998 - 2001	FL		
	50	Predator (LC/2T) 3 Bolt Front Disc / USD Showa Forks	1998 - 2003	FL	RR	
	50	Predator (LC/2T) 5 Bolt Front Disc / STD Paioli Forks	1998 - 2003	FL	RR	
	50	Red Bullet	2004 - 2005	FL		
	50	Senda Black Edition	2003 - 2003	RR		
	50	Senda R	1996 - 2002	FL	RR	
	50	Senda X Race R (240mm disc)	2005 - 2011	FL	RR	
	50	Senda X-Race SM (260mm)	2006 - 2011	FL	RR	
	50	Senda X-treme R (240mm Disc)	2003 - 2011	FL	RR	
	50	Senda X-Treme SM (260mm disc)	2003 - 2011	FL	RR	
	50	Vamos	1996 - 1999	FL		
	50	Vamos FL	1996 - 1999	FL		
	50	X Race	2006 - 2006	FL		
	50	X Race	2006 - 2006	RR		
DRD	50	Senda R	2002 - 2002	RR		
DRD	50	Senda Racing R (300mm disc / Std mounted caliper)	2004 - 2010	RR		
DRD	50	Senda Racing SM (300mm disc / Std mounted caliper)	2004 - 2010	RR		
DRD	50	Senda SM (Double Disc Model / SR3A1A)	2005 - 2005	FL	FR	RR
DRD	50	Senda SM (Double Disc Model) SDR1DB	2002 - 2003	RR		
DRD	50	Senda SM Black Edition	2003 - 2003	RR		
DRD	50	Senda SM Black Edition	2005 - 2005	FL	FR	RR
DRD	50	Senda SM Racing LTD (SR2A2B Cast Wheels / Double F Disc)	2005 - 2007	FL	FR	RR
DRD	50	Senda SM Supermotard	2004 - 2011	FL	RR	
DRD	50	Supermoto	2003 - 2004	FL	RR	
GP1	50		2001 - 2003	FL	RR	
GP1	50	Euro 2 Chain Driven / Radial Cal. / 5-Bolt Fixing	2005 - 2005	RR		
GP1	50	Open	2006 - 2011	RR		
GP1	50	Race Chain Driven / Rad. Cal / 5-Bolt Fixing	2005 - 2007	RR		
GPR	50	(40mm Forks / 180mm R/Disc / Rad. Caliper)	2004 - 2007	RR		
GPR	50	2T (41 mm Forks/218mm R/Disc/Radial Caliper)	2009 - 2011	RR		
GPR	50	Nude (Radial Caliper/180mm R/Disc)	2004 - 2009	RR		
GPR	50	R (218mm R/Disc)	1997 - 2001	RR		
GPR	50	Racing (40mm Forks/180mm R/disc/Radial Caliper)	2008 - 2010	RR		
GPR	50	Replica Racing (218mm R/Disc)	1999 - 2003	RR		
GPR	80	Cup (Radial Caliper)	2004 - 2005	RR		
	100	Atlantis (4T) (13" - 3 Spoke Wheels)	2004 - 2006	FL		
	100	Atlantis (AC/2T)	2000 - 2001	FL		
GPR	125	Nude (Radial Caliper) (2T)	2004 - 2008	RR		
GPR	125	Racing (Radial Caliper) (2T)	2004 - 2007	RR		
DUCATI						
	549	cc Supermono	1993 - 1995	RR		
ECO						
	150	Bushman (LX 150 GY)		RR		
EXPLORER						
KBR	200		2005 - 2005	RR		
FACTORY						
R14	50	Phantom Aqua	2004 - 2004	RR		
RP	50		2005 - 2005	RR		
SM	50	Chrono	2004 - 2004	RR		
YM	50		2005 - 2005	RR		
YR	50	Desert	2002 - 2003	FL	RR	
YR	50	Desert	2004 - 2005	RR		
YR	125	4T	2005 - 2005	RR		
FANTIC						
		125/5/245/305	1989 - 1989	FL	RR	
		Series 7 (All Models)	1990 - 1990	FL	RR	
	50	.5 Trial	1989 - 1989	FL	RR	
	50	.7 Trial	1990 - 1990	FL	RR	
	50	.9 Trial	1991 - 1991	FL	RR	
	50	Clubman	1995 - 1995	FL	RR	
	80	Clubman	1995 - 1995	FL	RR	
	125	/249 Section R	1995 - 1995	FL	RR	
	250	K-Roo (All Models)	1992 - 1995	FL	RR	
	305		1989 - 1989	FL	RR	
	307	Trial	1991 - 1991	FL	RR	
	309		1992 - 1992	FL	RR	
FYM						
CR	110		2006 - 2007	RR		
CR	110	ESR	2006 - 2007	RR		
	125	X Sport Typhon Quad	2006 - 2007	RR		
CR	125	R	2006 - 2007	RR		
CR3	125		2006 - 2007	RR		
GARELLI						
	50	Sahel	1991 - 1991	RR		
GSP	50	(2T)	2009 - 2012	RR		
	80	Sahel	1991 - 1991	RR		
	323	Trial	1986 - 1986	FL		
GAS GAS						
		Contact Models	1993 - 1995	FL	RR	
EC	50	Boy (Air Cooled)	2005 - 2005	FL		
K	50	Quad	2006 - 2006	RR		
TXT	50	(Boy)	2004 - 2015	FL	RR	
TXT	50	Cadet	2006 - 2009	FL		
MX	65		2005 - 2008	RR		
	125	Pampera	1996 - 1997	FL	RR	
JTR	125		1996 - 1997	FL	RR	
JTX	125		1995 - 1998	FL	RR	
JTR	160		1996 - 1997	FL	RR	
JTX	200		1995 - 1998	FL	RR	
TX	200		1998 - 1998	FL	RR	
	250	Contact JT25 (238cc)	1993 - 1994	FL	RR	
	250	Pampera	1996 - 1999	FL	RR	
JTR	250		1996 - 1997	FL	RR	
JTX	270		1995 - 1998	FL	RR	
TX	270		1998 - 1998	FL	RR	
	320	Pampera	1998 - 1999	FL	RR	
JTX	320		1995 - 1998	FL	RR	
TX	320		1998 - 1998	FL	RR	
GT	327	Contact	1993 - 1995	FL	RR	
	370	Pampera	1996 - 1997	FL	RR	
JTR	370		1996 - 1997	FL	RR	

AD | S3 | S33 RACING

PART NUMBER

121

GILERA					
	50	Zulu	2001 - 2001	FL	RR
GSM	50		1999 - 2003	FL	RR
H@K	50		2001 - 2002	FL	RR
RCR	50	Enduro	2003 - 2006	FL	RR
RK	50	Cannibal	1996 - 1998	FL	RR
SMT	50		2007 - 2007	FL	RR
SMT	50	Supermotard	2003 - 2006	FL	RR
SC	125		2006 - 2007	RR	
GMA					
		4 Piston model F		FL	
HERO					
	50	Envoy	1999 - 1999	FL	
HM					
CRE	50	Baja/Derapage	2001 - 2002	RR	
HONDA DALL'ARA					
XR	125	SM	2004 - 2004	RR	
HP POWER					
	50	Copper (4T)	2010 - 2012	RR	
HRD					
	50	Sonic 2 Supermotard		RR	
	50	Sonic 2 Trail		RR	
	125	Cabriolet	2001 - 2001	RR	
	125	Cabriolet Supermotard		RR	
	125	Cabriolet Trail		RR	
HUSQVARNA					
		Husky Boy J	2001 - 2002	FL	
		Husky Boy R	2001 - 2001	FL	
		Husky Boy S	2001 - 2002	FL	
SM	50		2002 - 2002	RR	
WR	50		2002 - 2002	RR	
WRS	50	Scooter	1998 - 2000	FL	
IRON PEGASUS					
		Small Caliper (Single pin fixing)		FL	
ITALJET					
	50	Dragster	1998 - 2007	FL	RR
	50	Formula Air	1999 - 2003	FL	
	50	Formula LC	1996 - 2003	FL	RR
	50	Ombra Nera	1997 - 2000	FL	
	50	Torpedo	1998 - 2003	FL	
	125	Dragster LC	2000 - 2008	FL	RR
	125	Formula LC (2T/Twin Cyl)	1996 - 2003	FL	RR
	125	Torpedo (4T)	1999 - 2003	FL	
	125	Twin	1998 - 1998	FL	RR
	150	Torpedo	2001 - 2001	FL	
	180	Dragster LC	2000 - 2008	FL	RR
	250	Dragster	2007 - 2008	FL	RR
JAWA					
	50	Minarelli	2003 - 2004	FL	
	50	Robby	2003 - 2004	FL	
	100	Robby	2003 - 2004	FL	
	125	Dandy	1999 - 2002	FL	RR
	125	Dandy	2003 - 2004	FL	RR
	125	Sport	2003 - 2004	FL	RR
	125	Travel	2003 - 2004	FL	RR
JAYBRAKE					
		Dual 7 Quad (300-04) (2&4 Piston)		FL	
JCM					
	240	Europa	1989 - 1989	FL	
KTM					
SX	60		1998 - 2000	FL	
SX	65		1998 - 2001	FL	
LEM					
		Four X Pro		RR	
MACAL					
AM5/6	50	Trophy	1999 - 1999	FL	
AM5/6	50	Trophy H2O	1999 - 1999	FL	
MACBOR					
XC	50	510 Racing	2004 - 2004	RR	
XC	50	512 Racing	2004 - 2004	RR	
XC	50	515 R 6V	2004 - 2004	RR	
MALAGUTI					
X3M		Enduro (Cast wheel)	2008 - 2010	RR	
X3M		Motard (Cast wheel)	2008 - 2010	RR	
	50	Drakon S	2006 - 2006	RR	
	50	Fifty	2004 - 2004	RR	
NKD	50	Drakon	2005 - 2009	RR	
XSM	50	Supermotard	2003 - 2011	RR	
XTM	50		2003 - 2011	FL	RR
MBK					
	50	X-Limit	2004 - 2004	FL	RR
DT	50	Enduro	2003 - 2003	FL	RR
DT	50	Supermotard	2003 - 2006	RR	
TZR	50	X Power	2003 - 2009	RR	
MONTESA					
	125	Cota	1988 - 1988	FL	RR
	304	Cota	1988 - 1988	FL	RR
	307	/335 Cota	1988 - 1988	FL	RR
	307	Cota	1989 - 1989	FL	RR
	307	Cota Trial	1988 - 1988	FL	RR
	309	Cota	1989 - 1989	FL	
	310	Cota	1989 - 1989	FL	
	311	(Honda) 260cc	1992 - 1993	FL	
	314	R (Honda)	1994 - 1996	FL	
	315	R (Honda)	1997 - 2000	FL	
M7	360	Enduro	1985 - 1985	FL	
MOTO-ROMA					
SMX	125		2004 - 2006	RR	
MOTORHISPANIA					
	50	Furia Max Enduro	2006 - 2010	FL	RR
	50	Furia Max Supermoto	2007 - 2010	FL	RR
MH	50	Furia 6v	1999 - 2004	FL	RR
RX	50	Super Racing	2006 - 2007	RR	
RYZ	50		2003 - 2003	RR	
RYZ	50	Enduro	2006 - 2010	FL	RR
RYZ	50	Pro Racing Enduro	2006 - 2010	RR	
RYZ	50	Pro Racing Enduro	2013 - 2014	RR	
RYZ	50	Pro Racing Supermotard	2006 - 2010	RR	
RYZ	50	Pro Racing Urban Bike	2006 - 2010	RR	
RYZ	50	Supermotard	2006 - 2010	RR	
RYZ	50	Urban Bike	2006 - 2010	RR	
	125	Arena Pro Racing Urban bike	2006 - 2006	RR	
	125	Duna Dual Plus Trail	2008 - 2010	RR	
	125	Duna Hard Road Enduro	2008 - 2012	RR	
	125	Duna Plus	2014 - 2014	RR	
RYZ	125	Arena Enduro	2005 - 2005	FL	RR
RYZ	125	Arena Pro Racing Supermotard	2006 - 2006	RR	
PERFORMANCE MACHINES					
		125 X 2	2009 -	FL	
		125 X 4S		FL	
		125 X 4SL		FL	
		2/4 Piston (small pad) (PM 0052-T601)		RR	
PEUGEOT					
		Ludix Acid	2006 - 2006	FL	

PART NUMBER

121

AD | S3 | S33 RACING

		Ludix Blaster (10" Wheels)	2005 - 2009	FL	
		Ludix Red Zone	2006 - 2006	FL	
		Ludix Urban Track	2006 - 2007	FL	
XP6		Enduro / Top Road (21"FW)	2003 - 2010	FL	RR
XP6		Supermoto (17"FW / 240mm)	2003 - 2009	FL	RR
XP6		Supermoto (17"FW / 260mm)	2003 - 2010	RR	
XPS		Enduro	2003 - 2009	FL	RR
XPS		Street (17" FW / 280mm)	2003 - 2009	RR	
	50	/100 Vivacity (All models)	1999 - 2007	FL	
	50	1/2 Speedfight (AJP Caliper)	1997 - 2008	FL	
	50	Blaster Ice Blade (2T/12" wheels)	2010 - 2012	FL	RR
	50	Buxy (AJP Caliper)	1994 - 1994	FL	
	50	Elyseo	2003 - 2003	FL	RR
	50	Elyséo (AJP Caliper)	1998 - 2002	FL	
	50	Elystar Advantage	2002 - 2007	FL	RR
	50	Elystar TSDi	2002 - 2007	FL	
	50	Jet C Tech	2011 - 2012	FL	RR
	50	Jet Darkside (2T)	2011 - 2013	FL	RR
	50	Jet Force / Jet-C	2003 - 2010	FL	RR
	50	Jet Force H2i (2T - Air Cooled)	2011 - 2012	FL	
	50	Jet H2i (2T-L/C)	2011 - 2012	FL	RR
	50	Jet Iceblade (2T)	2011 - 2013	FL	RR
	50	Looxor	2001 - 2006	FL	
	50	Looxor TSDI (Rear Disc)	2006 - 2006	FL	RR
	50	Ludix 2 Trend (2T)	2007 - 2011	FL	
	50	Ludix Bullet	2004 - 2004	FL	
	50	Ludix Elegance	2004 - 2009	FL	
	50	Ludix Pro (4T/14" wheels/AJP Caliper)	2011 - 2013	FL	
	50	Ludix Snake	2004 - 2009	FL	
	50	Ludix Trend	2004 - 2007	FL	
	50	Metal X	2002 - 2003	FL	
	50	Squab (AJP Caliper)	1994 - 1994	FL	
	50	Streetzone (2T)	2014 - 2018	FL	
	50	Trekker (2T) AJP Caliper	1998 - 2000	FL	
	50	Vivacity (12" Wheels / 190mm Disc) (AJP Caliper)	1992 - 2007	FL	
	50	Vivacity 2 (10" Wheels / 190mm Disc) (AJP Caliper)	2008 - 2011	FL	
RS 12	50	Blaster (2T)	2010 - 2011	FL	
TRK	50	(2T) (10"wheels)	2009 - 2012	FL	
TRK	50	(2T) (12"wheels)	2009 - 2012	FL	
TRK2	50	WRC (2T)	2004 - 2006	FL	
XP6	50	Track	2003 - 2008	FL	RR
XPS	50	Street	2005 - 2009	RR	
XPS	50	Top Road (17" front wheel)	2010 - 2012	RR	
XPS	50	Track (21" front wheel)	2011 - 2012	RR	
XR6	50	(2T)	2003 - 2007	RR	
	100	1/2 Speedfight	1997 - 2009	FL	RR
	100	Elyseo	2003 - 2003	FL	RR
	100	Elyséo (AJP Caliper)	1998 - 2002	FL	
	100	LOOXOR	2001 - 2004	FL	RR
	100	Streetzone (4T)	2014 - 2015	FL	
	100	Trekker (2T)	1998 - 1998	FL	
	125	Elyséo (AJP Caliper)	1998 - 2002	FL	
	125	LOOXOR	2003 - 2006	RR	
	125	Ludix Ambition	2004 - 2004	FL	
XP	125	Street Evo 2	2005 - 2005	RR	
XPS	125	CT	2005 - 2007	FL	RR
	150	Elyseo	1998 - 2002	FL	
	150	Looxor	2003 - 2006	RR	

PGO

RS2		NKD	2005 - 2005	RR	

PIAGGIO VESPA

	50	Diesis	2001 - 2005	FL	
	100	Diesis	2001 - 2003	FL	

PUCH

		Condor	1990 - 1990	FL	
TZX	50		1992 - 1992	FL	
	75	Cobra	1985 - 1985	FL	

RIEJU

	50	Spike	2004 - 2006	FL	RR
	50	Spike Pro	2004 - 2004	RR	
	50	Spike X	2006 - 2007	FL	RR
	50	Tango (4T)	2007 - 2008	RR	
	50	Tango Motard (Cast wheel)	2011 - 2011	RR	
MRX	50		2003 - 2008	FL	RR
MRX	50	Castrol	2001 - 2002	RR	
MRX	50	Pro	2004 - 2008	RR	
NKD	50		2007 - 2007	RR	
RR	50	Castrol	2000 - 2002	RR	
RR	50	Sport	2003 - 2006	FL	RR
RR	50	Supermotard	1996 - 1996	FL	RR
RR	50	Thunderfire	1997 - 2002	FL	RR
RRX	50		2006 - 2009	FL	RR
RRX	50	Spike (17" Cast wheel)	2006 - 2009	FL	RR
RRX	50	Spike (17" wheels/Spoke wheel)	2003 - 2008	FL	RR
RS1	50		1997 - 2000	FL	RR
RS1	50		2001 - 2004	RR	
RS2	50	NKD	2005 - 2005	RR	
SMX	50		2001 - 2002	RR	
SMX	50		2002 - 2006	FL	RR
SMX	50	(Cast wheel)	2007 - 2008	FL	RR
SMX	50	Pro Street	2006 - 2008	RR	
SMX	50	Pro Supermotard / Top	2004 - 2007	RR	
MRX	125		2002 - 2008	RR	

ROXON

SM	50	Duel	2006 - 2006	FL	RR
TT	50	Duel	2006 - 2006	FL	RR

SACHS

	50	Madass (2 Stroke)	2004 - 2005	RR	

SCORPA

TY-S	125	F	2006 - 2008	FL	
TY-S	125	F Enduro	2003 - 2005	FL	RR
TY-S	175	F	2006 - 2006	FL	
	250	Easy	1996 - 1996	FL	RR

SHERCO

		All models 0.5-2.0	2001 - 2005	FL	
		All Models 1.2-2.0	2001 - 2005	RR	
		Trials 0.8 (2T)	2001 - 2004	FL	
		Trials 1.25 (2T)	1999 - 2005	FL	RR
		Trials 2.0 (2T)	1999 - 2005	FL	RR
		Trials 2.5 (2T)	1999 - 2005	FL	RR
		Trials 2.9 (2T)	1999 - 2005	FL	RR
	50	Enduro (2T)	2002 - 2007	RR	
	50	Supermotard (2T)	2002 - 2007	RR	
EN	50	Enduro (50 EN)	2003 - 2007	RR	
SE	50	0,5	2011 - 2011	RR	
SM	50	0,5	2011 - 2011	RR	
SM	50	Supermotard	2003 - 2007	RR	
	80	0,8	2001 - 2005	FL	
	125	City Corp (All Models)	2003 - 2007	RR	
SE	125	1.25 F	2011 - 2011	RR	

AD | S3 | S33 RACING

PART NUMBER

121

SM	125		2003 - 2006	RR	
SM	125	1.25 F Black Panther	2011 - 2011	RR	

SIAMOTO

SX 1	125		2004 - 2004	RR	

SIMSON

	125	SM	2001 - 2001	RR	
	125	Star	1999 - 1999	FL	

SJP

		2 Piston caliper (30-375)		FL	RR
		4 Piston caliper (30-370)		FL	RR

TOMOS

		Alpino (Front disc)		FL	
		APN6		FL	
		Fantastic 25		FL	
		Hip Hop		FL	
		Racing		FL	
		Revival TS		FL	
	50	Youngst'r	2005 - 2008	FL	
SE	50		2005 - 2005	RR	
SE	125	F	2005 - 2008	RR	
SM	125	F	2005 - 2008	RR	
SM	125	F (Rad.cal.)	2006 - 2008	RR	

W.K.BIKES

	50	Wasp R (2T)	2013 - 2015	RR	
SM	50		2011 - 2012	FL	RR

YAMAHA

TZR	50	(5WX1) Power	2003 - 2016	RR	
TY	250	R	1991 - 1992	FL	
TY	250	R	1993 - 1994	FL	RR
TYZ	250	R	1993 - 1996	FL	RR

EQUIVALENTS OEM

3380925	3380928	3499074	8113181	510 015 4 282	4AJ W0045 00	737786
752816	753092	753200	757215	59330 06E00	45105 NN2 900	0DN00G04700141
812732	2525241000	2525350000	00G04700141	00H01301931	00D01210221	213307100003
P150442	59300 06E00	KA3497506	K00996315	5WX W0045 10	460 13 016 000	9300060
9307001	EJ29099074	11955600	21330710000019	K00996315	00H01303551	11966900
61340051A	R235000	R051	GA121001T	D06-45230-00-00		

PART NUMBER

122

AD	K5	S3

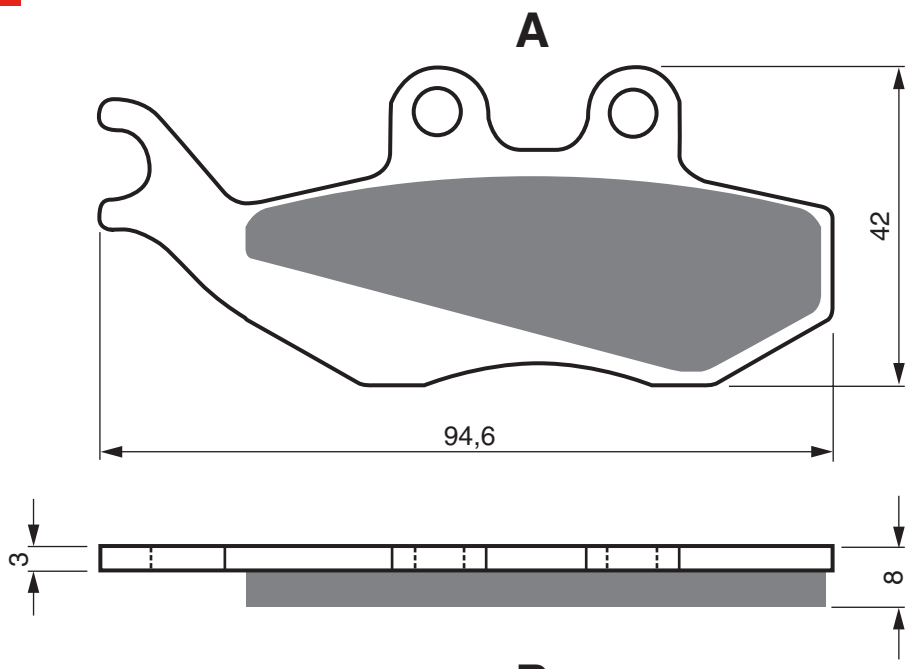

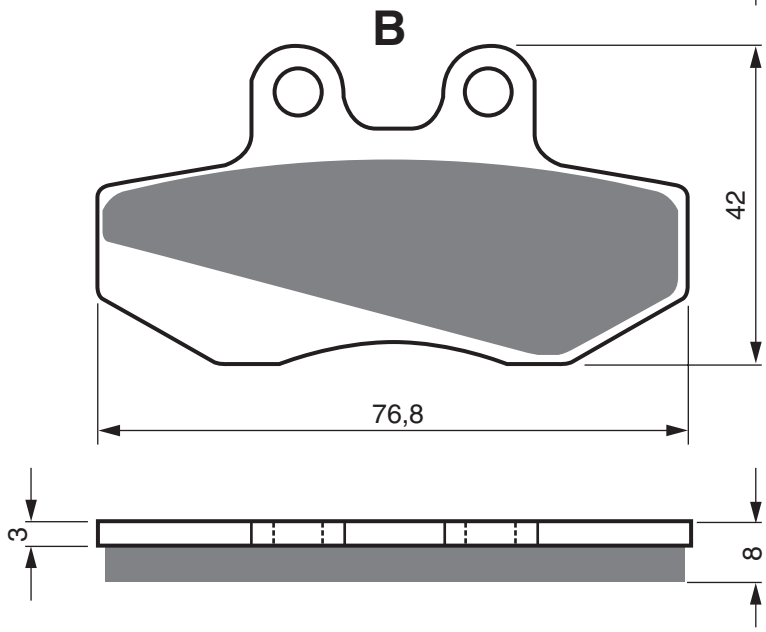

AJP

PR3	125	Enduro	2008 - 2012	FL
PR3	125	Enduro Pro	2010 - 2012	FL
PR3	125	Supermoto	2008 - 2012	FL
PR3	125	Trail	2011 - 2012	FL
PR4	125	Enduro	2010 - 2012	FL
PR4	125	Enduro Pro	2010 - 2012	FL
PR4	125	Supermoto	2010 - 2012	FL
PR4	125	Supermoto Pro	2010 - 2011	FL
PR3	200	Enduro	2008 - 2011	FL
PR3	200	Enduro	2012 - 2014	FL
PR3	200	Enduro Pro	2010 - 2011	FL
PR3	200	Enduro Pro	2012 - 2014	FL
PR3	200	M/X Pro	2010 - 2011	FL
PR3	200	M/X Pro	2012 - 2014	FL
PR3	200	MX	2010 - 2011	FL
PR3	200	Supermoto	2008 - 2011	FL
PR3	200	Supermoto	2012 - 2014	FL
PR3	200	Supermoto Pro	2010 - 2011	FL
PR4	200	Enduro	2012 - 2014	FL
PR4	200	Enduro Pro	2010 - 2011	FL
PR4	200	Enduro Pro	2012 - 2014	FL
PR4	200	Extreme	2012 - 2014	FL
PR4	200	SM Pro	2010 - 2011	FL
PR4	200	Supermoto	2010 - 2011	FL
PR4	200	Supermoto	2012 - 2014	FL

AD | K5 | S3

PART NUMBER

122

ALFER

VR	125	Raider	2012 - 2013	FL
VX	125	Explorer	2012 - 2013	FL
VX	200	Explorer	2012 - 2013	FL
EVX	400	Electric	2012 - 2013	FL

APRILIA

	50	Pegaso (Pad with hook on one side modification B)	1992 - 1994	FL
	50	Tuono	2004 - 2004	FL
MX	50		2003 - 2005	FL
RS	50	(5 bolt fixing front & rear)	1999 - 2005	FL
RX	50	C/CD	1995 - 2004	FL
RX	50	Factory	2006 - 2020	FL
RX	50	Racing	2004 - 2006	FL
SX	50		2006 - 2020	FL
SX	50	Factory	2019 - 2020	FL
SX	50	Limited Edition	2014 - 2016	FL
	125	Pegaso KAT	1994 - 1995	FL
ETX	125		1999 - 2001	FL
RX	125		1992 - 1999	FL

BENELLI

	125	Velvet (13" Front wheel/Touring)	2008 - 2012	FL
	125	Velvet (Touring)	2008 - 2012	FL
	150	Velvet (13" Front wheel/Touring)	2008 - 2012	FL
	150	Velvet (Touring)	2008 - 2012	FL
	250	Velvet	1999 - 2012	FL
	400	Velvet	2003 - 2004	FL
	400	Velvet Dusk	2003 - 2004	FL

BETA

RR	50	Enduro	2004 - 2007	FL
RR	50	Enduro	2008 - 2020	FL
RR	50	Enduro Alu / Motard Alu	2004 - 2008	FL
RR	50	Enduro Factory	2012 - 2020	FL
RR	50	Enduro Racing	2009 - 2011	FL
RR	50	Motard (Spoke Wheels)	2009 - 2012	FL
RR	50	Motard Skull	2011 - 2011	FL
RR	50	Motard Sport (Cast wheel 5 spoke)	2014 - 2020	FL
RR	50	Motard Standard (Cast wheel 5 spoke)	2013 - 2014	FL
RR	50	Motard Track (Cast wheels)	2008 - 2014	FL
RR	50	Motard Track/Racing (Spoke Wheels)	2014 - 2020	FL
RR	50	Standard	2005 - 2008	FL
RR	50	Track (Spoke wheel)	2014 - 2014	FL
	125	Urban	2008 - 2015	FL
	125	Urban Special	2009 - 2015	FL
ALP	125	(4T)	2005 - 2015	FL
RE	125	(4T) Enduro	2009 - 2010	FL
RR	125	4T Enduro (A/C]	2009 - 2014	FL
RR	125	4T Enduro (LC)	2011 - 2018	FL
RR	125	4T Motard (A/C Spoke Wheel)	2008 - 2014	FL
RR	125	Motard 4T (LC) (Cast wheels)	2011 - 2018	FL
	200	Urban	2008 - 2015	FL
	200	Urban Special	2009 - 2015	FL
ALP	200	(4T)	2005 - 2020	FL
ALP	350	4.0 (4T / 349cc)	2005 - 2015	FL

CCM

SR	40	Street Scrambler	2007 - 2009	FL

CPI

GTR	50	(2 Pin Pad Fixing Front Caliper)	2002 - 2002	FL
GTS	50		2002 - 2003	FL
SX	50		2006 - 2007	FL
GTR	125	(2 Pin Pad Fixing Front Caliper)	2002 - 2002	FL
GTS	125		2002 - 2003	FL
GTR	150	(2 Pin Pad Fixing Front Caliper)	2002 - 2002	FL
GTS	200		2002 - 2003	FL

DAELIM

ST	125		2003 - 2003	FL

DERBI

DRD	50	Senda Racing SM (Cast wheel/260mm F/Disc)	2011 - 2012	FL
DRD	50	Senda R	2002 - 2002	FL
DRD	50	Senda Racing R (300mm disc / Std mounted caliper)	2004 - 2010	FL
DRD	50	Senda Racing R (Spoke wheel/260 mm F disc)	2011 - 2012	FL
DRD	50	Senda Racing SM (300mm disc / Std mounted caliper)	2004 - 2010	FL
GP1	50	Open	2006 - 2011	FL
	125	Cross City	2007 - 2008	FL
	125	Mulhacen (4T) Up to Ref No 7N001790 / Spoke Wheel / 2 Pad Fixing	2007 - 2007	FL
	125	Senda Baja R (4T) (260mm disc)	2006 - 2012	FL
	125	Senda Baja SM (4T) (300mm disc)	2006 - 2012	FL
	125	Senda R VIN # SCA1A	2004 - 2004	FL
	125	Senda SM (Twin Headlight)	2004 - 2007	FL

FACTORY

RP	50		2005 - 2005	FL
SM	50	Chrono	2004 - 2004	FL
YM	50		2005 - 2005	FL
YR	50	Desert	2004 - 2005	FL
YR	125	4T	2005 - 2005	FL

FANTIC

	50	Caballero Regolarita Casa	2006 - 2009	FL
	50	Caballero Supersei Motard	2006 - 2009	FL
	125	Caballero Regolarita Casa	2007 - 2008	FL
	125	Caballero Supersei Motard	2007 - 2009	FL

GAS GAS

EC	50		2005 - 2005	FL
SM	50		2005 - 2005	FL
	125	Pampera	2004 - 2004	FL
	125	Pampera (2T)	2005 - 2008	FL
	250	Pampera	2002 - 2002	FL
	250	Pampera	2004 - 2004	FL
	280	Pampera	2004 - 2004	FL

GENERIC

	50	Toxic	2007 - 2008	FL
	50	Trigger SM (All models)	2006 - 2018	FL
	50	Trigger X (All Models)	2006 - 2018	FL
	125	Trigger SM	2008 - 2009	FL
	125	Trigger X	2008 - 2009	FL

GILERA

		Cougar	2000 - 2001	FL
DNA	50	(Grimeca Caliper)	2001 - 2006	FL
DNA	125		2001 - 2003	FL
FX	125	Runner (Rear drum brake Model / Grimeca front caliper)	1997 - 2002	FL
FXR	125	Runner (Rear drum brake model/Grimeca front caliper)	1997 - 2002	FL
VXR	125	Runner 4 Stroke (Grimeca Caliper)	2001 - 2004	FL
DNA	180		2001 - 2003	FL
FX	180	Runner (Rear drum brake model/Grimeca front caliper)	1997 - 2002	FL
FXR	180	Runner (Rear drum brake model/Grimeca Front Caliper)	1997 - 2002	FL
VXR	180	Runner 4 Stroke (Grimeca Caliper)	2001 - 2004	FL
VXR	200	Runner (4T) (6 Bolt rear disc) (Grimeca Caliper)	2002 - 2004	FL

HM

CRE	50	Baja RR	2010 - 2012	FL
CRE	50	Baja RR From ZEN50XACEA7700325	2007 - 2009	FL
CRE	50	Baja RR Up to ZEN50XACEA7700324	2007 - 2009	FL
CRE	50	Baja/Derapage	2001 - 2002	FL
CRE	50	Baja/Six/Derapage	2003 - 2009	FL
CRE	50	Derapage RR From to ZEN50XACMA7700385	2007 - 2009	FL
CRE	50	Derapage RR Up to ZEN50XACMA7700384	2007 - 2009	FL
CRE	50	Six Competition	2007 - 2008	FL
CRE	50	Six/Baja/Derapage Brembo caliper / 41mm Paioli Forks	1995 - 2002	FL

PART NUMBER

122

AD | K5 | S3

CRM	50	Derapage Competition	2007 - 2008	FL	
CRE-F	125	X	2009 - 2009	FL	
CRM-F	125	X	2009 - 2009	FL	
HRD					
GS	50			FL	
KEEWAY					
TX	50		2010 - 2012	FL	
X RAY	50	Supermoto	2007 - 2009	FL	
TX	125		2010 - 2012	FL	
TX	125	SM (17"FW)	2013 - 2015	FL	
TX	200	(19" F/wheel)	2013 - 2014	FL	
MALAGUTI					
X3M		Motard (Cast wheel)	2008 - 2010	FL	
XSM	50	Supermotard	2003 - 2011	FL	
	125	-3 Madison	2006 - 2009	FL	
	125	/200 Phantom MAX	2004 - 2008	FL	
	125	Madison	1999 - 2002	FL	
	125	Madison R	2003 - 2007	FL	
	150	Madison	1999 - 2003	FL	
	180	Madison	2002 - 2003	FL	
	200	Madison S	2004 - 2004	FL	
	250	Madison	2004 - 2007	FL	
	250	Madison ie3	2006 - 2010	FL	
	250	Password	2005 - 2011	FL	
	250	Phantom Max	2004 - 2008	FL	
MBK					
		X-Limit Supermoto	2003 - 2009	FL	
DT	50	Supermotard	2003 - 2006	FL	
TZR	50	X Power	2003 - 2009	FL	
MOTORHISPANIA					
RYZ	50	Pro Racing Enduro	2013 - 2014	FL	
RYZ	50	Pro Racing Supermotard	2006 - 2010	FL	
RYZ	50	Pro Racing Urban Bike	2006 - 2010	FL	
RYZ	50	Supermotard	2006 - 2010	FL	
	125	Duna Dual Plus Trail	2008 - 2010	FL	
	125	Duna Plus	2014 - 2014	FL	
	125	Duna Sport City Supermotard	2008 - 2010	FL	
PEUGEOT					
XPS		Street (17" FW / 280mm)	2003 - 2009	FL	
XPS	50	Street	2005 - 2009	FL	
XPS	50	Supermoto (17"FW / 260mm Disc)	2003 - 2010	FL	
	125	Elyseo (Rear Disc Model)	2003 - 2003	FL	
	125	Elystar	2002 - 2007	FL	
	125	Elystar (3 bolt fixing - front disc)	2002 - 2005	FL	
	125	Elystar (5 bolt fixing - front disc)	2006 - 2007	FL	
	125	Geopolis Executive/Non ABS (AJP Calipers)	2007 - 2012	FL	
	125	Geopolis Urban (AJP Caliper/ABS)	2007 - 2012	FL	
	125	Jet Force (All Models)	2003 - 2007	FL	
	125	Satelis Blacksat (AJP Caliper)	2010 - 2012	FL	
	125	Satelis 4V Executive/Premium/City (4Stroke/4Valve)	2006 - 2009	FL	
	125	Satelis Compressor (4T) (all models)	2006 - 2011	FL	
	125	Satelis RS	2007 - 2012	FL	
	125	Satelis RS (AJP Caliper)	2007 - 2012	FL	
	125	Satelis Urban (AJP Caliper/ABS)	2007 - 2012	FL	
	125	Satelis Whitesat (AJP Caliper)	2010 - 2011	FL	
	150	Elyseo (Rear Disc Model)	2003 - 2003	FL	
	150	Elystar (3 bolt fixing - front disc)	2002 - 2005	FL	
	150	Elystar (5 bolt fixing - front disc)	2006 - 2007	FL	
	250	Geopolis Urban (AJP Caliper/ABS))	2007 - 2010	FL	
	250	Geopolis (Executive/AJP/ Calipers/Non ABS)	2007 - 2010	FL	
	250	Satelis Urban (AJP Caliper/ABS)	2007 - 2012	FL	
	400	Geopolis (Urban / AJP Calipers /ABS)	2007 - 2012	FL	
PGO					
RS2		NKD	2005 - 2005	FL	
PIAGGIO VESPA					
	125	Beverly B (Grimeca Caliper)	2003 - 2006	FL	RR
	125	Skipper ST (4T)(Grimeca caliper)	2000 - 2004	FL	
	125	Super Hexagon GTX (11" Wheels) (Grimeca Calipers)	2000 - 2000	FL	
GT	125	L Granturismo	2003 - 2006	FL	
LX	125	Skipper	1998 - 1999	FL	
LX4	125	Hexagon	1998 - 1999	FL	
	150	Skipper ST (4T) (Grimeca Caliper)	2000 - 2004	FL	
LX	150	Skipper	1998 - 1999	FL	
	180	Super Hexagon GTX (11" wheels) (Grimeca Caliper)	2000 - 2000	FL	
LX	180	Hexagon	1998 - 1999	FL	
LXT	180	Hexagon	1998 - 1999	FL	
	200	Beverley	2003 - 2005	FL	RR
GT	200	L Granturismo	2003 - 2006	FL	
	250	Hexagon GT	1998 - 1999	FL	
	250	Super Hexagon GTX	2000 - 2002	FL	
RIEJU					
MRX	50	Pro/Top	2004 - 2008	FL	
RS2	50	NKD	2005 - 2005	FL	
RS2	50	Pro	2006 - 2009	FL	
SMX	50	Pro Street	2006 - 2008	FL	
SMX	50	Pro Supermotard / Top	2004 - 2007	FL	
SACHS					
ZX	125	Enduro	2001 - 2001	FL	
ZZ	125	Funbike	2002 - 2002	FL	
SHERCO					
	50	Enduro (Urban/SU (2T) (Spoke Wheel)	2008 - 2013	FL	
EN	50	Champion Replica	2008 - 2008	FL	
EN	50	Enduro	2008 - 2009	FL	
SM	50	Black Panter	2008 - 2010	FL	
SM	50	Replica Cup	2008 - 2008	FL	
SM	50	Supermotard	2008 - 2013	FL	
	125	City Corp (All Models)	2008 - 2008	FL	
SE	125	F Enduro (4T)	2010 - 2012	FL	
SM	125	F Black Panther (4T)	2010 - 2012	FL	
SIAMOTO					
SX 1	125		2004 - 2004	FL	
YAMAHA					
DT	50	X (Supermotard)	2004 - 2008	FL	
TZR	50	(5WX1) Power	2003 - 2016	FL	
XT	125	X (13D2/13D4/13D6)	2007 - 2011	FL	
XT	125	X (3D62/3D64)	2005 - 2006	FL	

EQUIVALENTS OEM

8113478	8113523	119 493 00	119 495 00	494628	R43440 311A0	754605
756020	5WX W0045 00	R290063110000	00009300080	1D5 F5811 00	00H04703141	K00976315
11955700	2525340000	11967800	13D FS811 00	1677	R050371008000	PE757231
K01309079	014360258000					

AD	S3	GP5	GP6	GP7

PART NUMBER

123

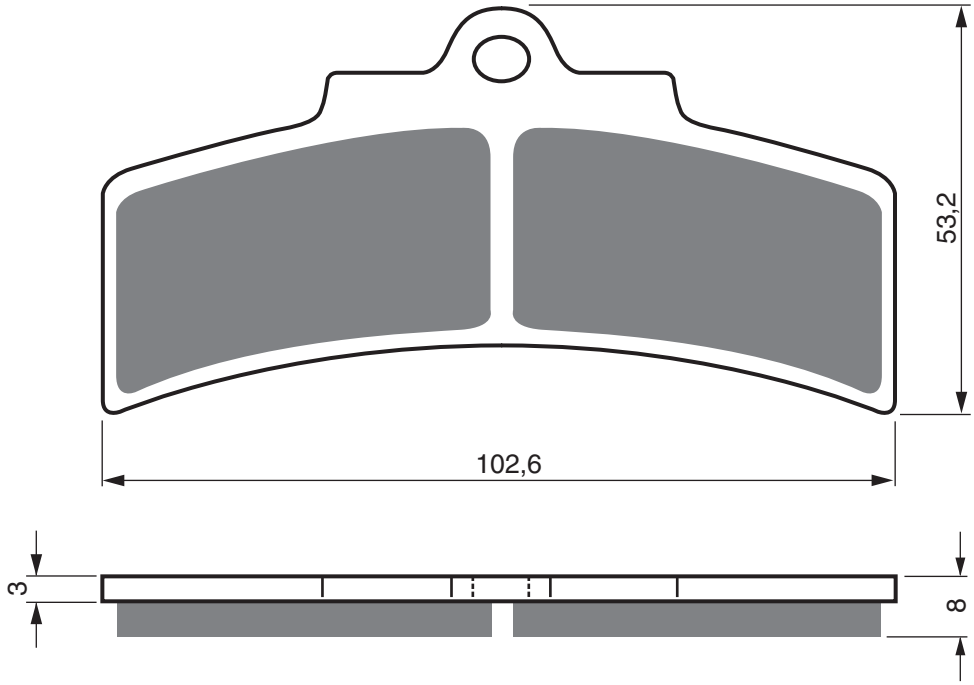

PVM

6 Piston Caliper (Old design) FL

Disc Brake Pads

PART NUMBER

124

AD	S3	S33 RACING	GP5	GP6	GP7	GPR

A

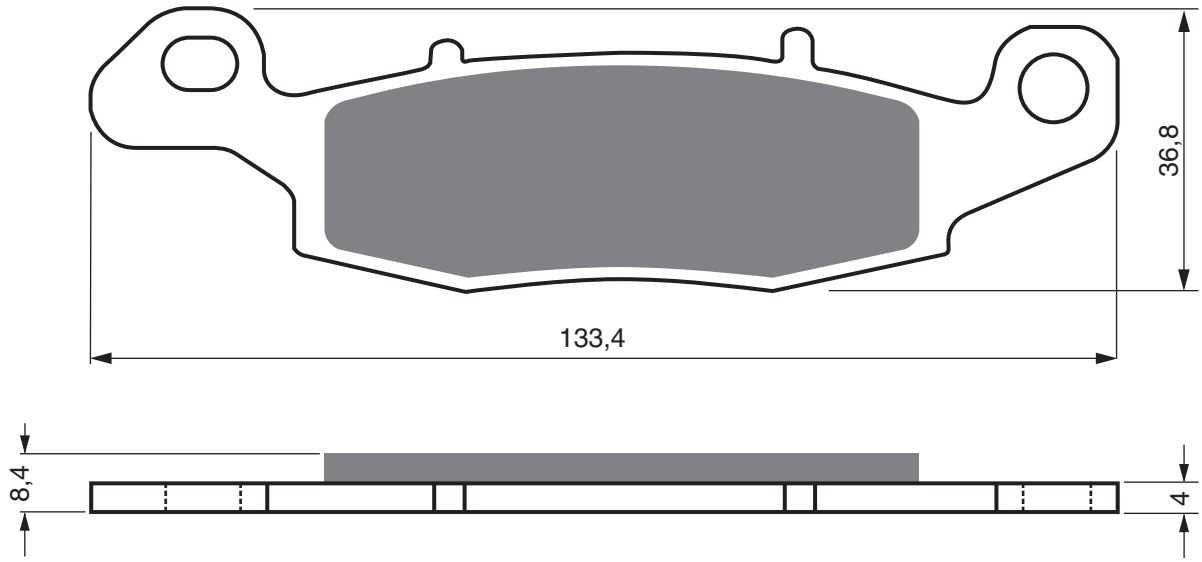

B

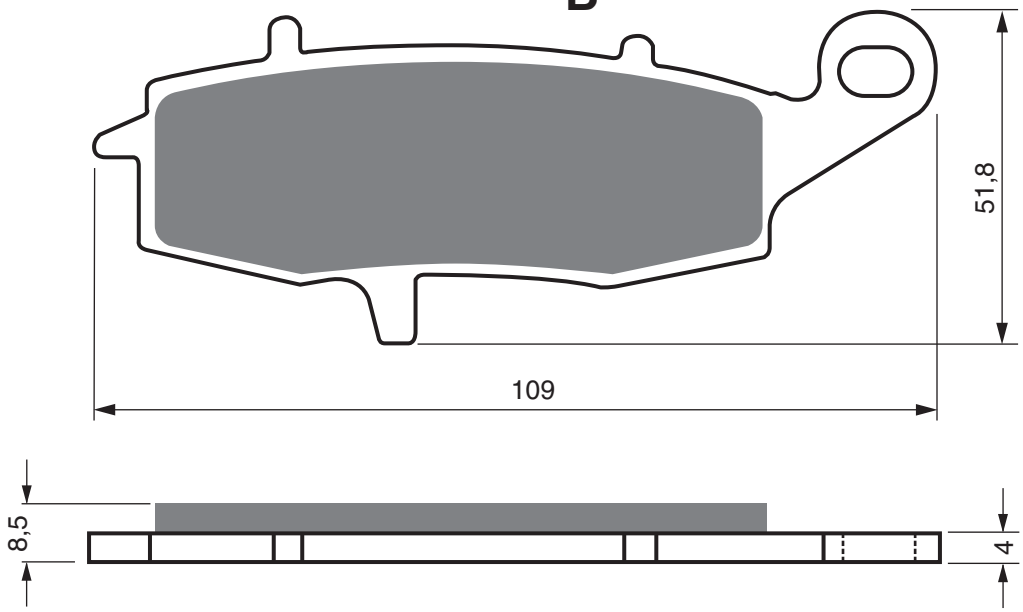

CF MOTO				
	650	NK	2012 - 2015	FR
	650	TK	2013 - 2015	FR
	650	TR	2013 - 2014	FR
	650	MT	2021 - 2021	FR
HP POWER				
	600	Pantera	2011 - 2011	FL
KAWASAKI				
BJ	250	F1/F2 (250 TR)	2002 - 2003	FL
ZR	250	B6 Balius-II	2002 - 2002	FL
ZRX	400	E3 (ZR 400 E3)	1996 - 1996	FR
	650	(KLE CBF/CCF/CEF) Versys Non ABS	2012 - 2012	FR
ER-6F	650	(EX 650 A6F/A7F/A8F/C9F/CAF/CBF)	2006 - 2011	FR
ER-6F	650	(EX 650 B6F/B7F/B8F/D9F/DAF/DBF) ABS	2006 - 2011	FR
ER-6F	650	(EX 650 ECF/EDS/EEF/EFF/EGF) (Double pipe typeframe/ Non ABS)	2012 - 2016	FR
ER-6F	650	(EX 650 FCF/FDS/FEF/FFF/FGF) Double pipe typerame/ With ABS)	2012 - 2016	FR
ER-6N	650	(ER 650 B6F/B7F/B8F/D9F/DAF/DBF)	2006 - 2011	FR
ER-6N	650	(EX 650 A6F/A6F/A8F/C9F/CAF/CBF)	2006 - 2011	FR
ER-6N	650	(EX 650 ECF/EDF/EEF/EFF/EGF) (Non ABS)	2012 - 2016	FR
ER-6N	650	(FCF/FDF/FEF/FFF/FGF) ABS	2012 - 2016	FR
EX	650	R (EX 650 CBF)	2011 - 2014	FR
KLE	650	A7F/A8F/A9F/CAF/CBF/CCF/CDF/CEF Versys	2007 - 2014	FR
KLE	650	B7F/B8F/B9F/DAF/DBF/DCF/DDF/DEF Versys (ABS)	2007 - 2014	FR
W	650	(EJ 650 A1/C3/C4/C5/C6/C7)	1999 - 2005	FL
Z	750	(ZR 750 J1/J2)	2004 - 2005	FR
Z	750	S (ZR 750 K1/K6F)	2005 - 2007	FR
ZR	750	D1 Zephyr	1996 - 1999	FR
ZR-7	750	(ZR 750 F1/F3/F5)	1999 - 2004	FR RR
ZR-7S	750	(ZR 750 H1/H2)	2001 - 2004	FR RR
EJ	800	ABF/ACF (W800/SolidF/Disc)	2011 - 2012	FL
EJ	800	ACFA (W 800 Special Edition Black Exhaust / Gold Rims)	2012 - 2012	FL
EJ	800	ADF/AEF/AFF/AGF (W 800)	2013 - 2016	FL
VN	800	C1/C2/E1/E2/E3 Drifter	1999 - 2004	RR
W	800	ABF	2011 - 2011	FL

AD | S3 | S33 RACING | GP5 | GP6 | GP7 | GPR

PART NUMBER

124

W	800	ACFA Special Edition Black Exhaust/Gold rims	2012 - 2012	FL	
W	800	ADF/AEF/AFF/AGF (EJ 800)	2013 - 2016	FL	
W	800	Cafe Style/Cockpit fairing	2011 - 2011	FL	
W	800	Special Edition (ADFA/AEFA/AFFA/AGFA) (EJ 800 Special Edition)	2013 - 2016	FL	
VN	900	A6F Classic	2006 - 2006	RR	
VN	900	B7F/B8F/B9F/BAF/BBF/BCF/BDF/BEF/BFF/BGF/BHF/BJF Classic (Spoke wheel)	2007 - 2020	RR	
VN	900	BBFA/BCFA/BDFA/BFFA Classic Special Edition/White wall Tyres Spoke Wheel	2011 - 2020	RR	
VN	900	C7F/C8F/C9F/CAF/CBF/CCF/CDF/CEFA/CFFA/CGF/CHF/CJF Custom (Cast wheel)	2007 - 2020	RR	
KLV	1 000	(LV 1000 A1H/A2H)	2004 - 2005	FR	
GPZ	1 100	ABS Horizont (ZXT10F/G936)	1997 - 1998	FR	
GPZ	1 100	E1/E2/F1	1995 - 1998	FR	
ZR	1 100	B1 "Zephyr"	1996 - 1997	FR	
ZR	1 100	B5 (Zephyr 1100 RS)	2002 - 2002	FR	
ZR	1 100	Zephyr (ZRT1100B/F989)	1997 - 1997	FR	
VN	1 500	G1/G2 Classic Tourer	1998 - 1999	FR	
VN	1 500	J1/J2/R1/R2/R3 Drifter	1999 - 2004	RR	
VN	1 500	L1/L2/L3/L4 Nomad Fi	2000 - 2003	FR	RR
VN	1 500	Mean Streak P1/P2	2002 - 2004	RR	
VN	1 500	N1/N2/N3 Classic Fi	2000 - 2004	RR	
VN	1 600	A1/A2/A3/A6F Classic	2003 - 2008	FR	RR
VN	1 600	B1 Mean Streak	2004 - 2004	RR	
VN	1 600	B2H/B6F/B7F (Mean Streak)	2005 - 2008	RR	
VN	1 600	D1H/D6F Classic Tourer	2005 - 2008	FR	RR
VN	1 700	B9F/BAF/BBF/BCF/BDF/BEF/BFF/BGF/BHF/BJF Voyager (ABS)	2009 - 2020	RR	
VN	1 700	C9F Classic Tourer	2009 - 2009	FR	RR
VN	1 700	DAF/DBF/DCF/DDF/DEF Classic Tourer ABS	2010 - 2014	RR	
VN	1 700	DFF/DGF Vulcan Nomad	2015 - 2016	RR	
VN	1 700	E9F Classic	2009 - 2009	FR	RR
VN	1 700	FAF/FBF/FCF/FDF/FEF Classic ABS	2010 - 2014	RR	
VN	1 700	KBF/KCF/KDF/KEF Voyager Custom	2011 - 2014	RR	
VN	2 000	A1/A2/A6F	2004 - 2008	RR	
VN	2 000	H8F/H9F Classic	2008 - 2009	RR	
SUZUKI					
RV	125	K2/K3/K4/K5/K6/K7/K8/K9/L0/L3/L4/L5/L6/L7/L8 Van-Van	2002 - 2018	FL	
RV	200	K2/K3	2002 - 2003	FL	
RV	200	L6/L7/L8/L9 Van-Van	2016 - 2019	FL	
GSX	250	FXK2/K3/K4/K5 (ZR 250C)	2002 - 2005	FL	
GSF	400	Bandit (GK75B/F610)	1994 - 1996	FR	
SV	400	K3/K4/K5	2003 - 2005	FR	
SV	400	N (VK53A)	1998 - 1998	FL	
SV	400	SK3/SK4/SK5	2003 - 2005	FR	
SV	400	SN (VK53A)	1998 - 1998	FL	
SV	400	SX/SY/SK1/SK2	2000 - 2002	FR	
SV	400	X/Y/K1/K2	2000 - 2002	FR	
GS	500	ET/EV/EW/EX/EY/K1/K2/K3/FK4/FK5/K5/FK6/K6/K7/FK7/K8/FK8	1996 - 2008	FL	
GSF	600	SY/SK1/SK2/SK3/SK4 (Faired Bandit)	2000 - 2004	FR	
GSF	600	Y/K1/K2/K3/K4 (Naked Bandit)	2000 - 2004	FR	
GSX	600	FW/FX/FY/FK1/FK2/FK3/FK4/FK5/FK6	1998 - 2006	FR	
DL	650	AK7/AK8/AK9/AL0 V-Strom ABS	2007 - 2011	FR	
DL	650	AK9 GT V-Storm Traveller ABS	2009 - 2011	FR	
DL	650	AL1 XP V-Strom Expedition	2011 - 2011	FR	
DL	650	AL2/AL3/AL4/AL5/AL6/AL7/AL8/AL9 V-Strom ABS	2012 - 2021	FR	
DL	650	K4/K5/K6 V-Strom	2004 - 2006	FR	
DL	650	XK7/XK8/XK9/XL0 V-Strom X	2007 - 2011	FR	
DL	650	XT V-Strom Touring ABS	2018 - 2020	FR	
DL	650	XT XAL5/XAL6/XAL7/XAL8/XAL9 V-Strom ABS	2015 - 2021	FR	
GSF	650	AK5/AK6 Naked Bandit - ABS	2005 - 2006	FR	
GSF	650	K5/K6 Naked Bandit Non ABS	2005 - 2006	FR	
GSF	650	SAK5/SAK6 Faired Bandit ABS	2005 - 2006	FR	
GSF	650	SK5/SK6 Faired Bandit Non ABS	2005 - 2006	FR	
SFV	650	AK9/AL0/AL1/AL2/AL3/AL4/AL5 (ABS)	2009 - 2015	FR	
SFV	650	K9/L0/L1/L2/L3/L4/L5 Gladius	2009 - 2015	FR	
SV	650	AK7/AK8/AK9/AL0 Naked - ABS	2007 - 2010	FR	
SV	650	AL7/AL8/AL9 (ABS)	2016 - 2020	FR	
SV	650	K3/K4/K5/K6/K7/K8/K9/L0 Naked - Non ABS	2003 - 2010	FR	
SV	650	SAK7/SAK8/SAK9/SAL0	2007 - 2015	FR	
SV	650	SK3/SK4/SK5/SK6/SK7/SK8/SK9/SL0 Top Fairing - Non ABS	2003 - 2015	FR	
SV	650	SX/SY/SK1/SK2 Top Fairing Non ABS	1999 - 2002	FR	
SV	650	X AL8/AL9 (ABS)	2018 - 2020	FR	
SV	650	X/Y/K1/K2 Naked - Non ABS	1999 - 2002	FR	
XF	650	V/W/X/Y Freewind (AC/H674)	1997 - 2002	FL	
GSR	750	AL2/AL3/AL4/AL5 (ABS)	2011 - 2015	FR	
GSR	750	L1/L2/L3/L4/L5/L6 (Non ABS)	2011 - 2016	FR	
GSX	750	FW/FX/FY/FK1/FK2/FK3/FK4/FK5/FK6	1998 - 2006	FR	
GSX	750	W/X/Y/K1	1998 - 2002	FR	
C	800	(VL 800 K6/K7/K8/K9/L0/L1/L2/L3/L5) Intruder (Spoke Wheel Model)	2006 - 2015	FL	
C	800	C (VL 800 CK7/CK8/CK9/CL0/CL1/CL2/CL3) Intruder (Cast Wheel Model)	2007 - 2015	FL	
M	800	/T (VZ 800 L4/L5 Intruder)	2014 - 2015	FL	
M	800	Z (VZ 800 K5-K9/L0/L1/L3) Intruder	2005 - 2013	FL	
M	800	Z (VZ 800 K9Z Intruder)	2009 - 2010	FL	
VL	800	BTL4 C800 Intruder	2014 - 2014	FL	
VL	800	K1/K2/K3/K4/K5 "Intruder Volusia"	2001 - 2005	FL	
VZ	800	Marauder (AF/H584)	1997 - 2003	FL	
DL	1 000	K2/K3/K4/K5/K6/K7/K8/K9/L0 V-Strom	2002 - 2010	FR	
DL	1 000	V-Strom ABS Adventure AL2	2012 - 2013	FR	
GSX	1 100	G (GV74A/F725)	1996 - 1996	FR	
M	1 500	(VZ 1500 K9/L0/L1 Intruder)	2009 - 2013	FR	RR
VL	1 500	BTL3/BTL4/BTL5 (CT 1500 BT Intruder)	2013 - 2015	RR	
VL	1 500	K2/K3 Intruder	2002 - 2003	FR	
VL	1 500	K5/K6/K7/K8 (C1500) Intruder	2005 - 2008	FR	
M	1 600	(VZ 1600 K4 Intruder)	2004 - 2004	RR	
M	1 600	(VZ 1600 K5 Intruder)	2005 - 2005	RR	
C	1 800	R (VLR 1800 K8/K9/L0/L1) Intruder	2008 - 2013	RR	
C	1 800	RT (VLR 1800 K8RT/K9RT) Touring Intruder	2008 - 2009	RR	
M	1 800	R (VZR 1800 K6/K7/K8/K9) Intruder - Handlebar Cowling	2006 - 2009	RR	
M	1 800	R2 (VZR 1800 NK8/NK9) Intruder - No Handlebar Cowling	2008 - 2009	RR	
M	1 800	RZ (VZR 1800 ZK7/ZK8/ZL1/ZL2) Intruder - with handlebar cowling	2007 - 2013	RR	
VLR	1 800	RK8 (C1800R/C109R Intruder)	2008 - 2010	RR	
VZ	1 800	K6	2006 - 2006	RR	
W.K.BIKES					
	650	i (Naked)	2013 - 2015	FR	
	650	TR (Touring)	2013 - 2015	FR	

EQUIVALENTS OEM

43082 0010	43082 1178	43082 1188	43082 1203	43082 1226	43082 1232	43082 1235
43082 1243	43082 1246	43082 1248	43082 1260	43082 1265	43082 1280	43082 1283
43082 S018	59100 33830	59100 33850	59100 33870	59101 33810	59101 33820	59101 33830
59101 33850	59102 33810	59102 33840	K4308-21203	59103 33810	A000-0801B0	43082 0123
43082 0063	43082 0124	59430B2 0123	102 33870	59102 33870		

PART NUMBER

126

AD	S3	S33 RACING	GP5	GP6	GP7	GPR

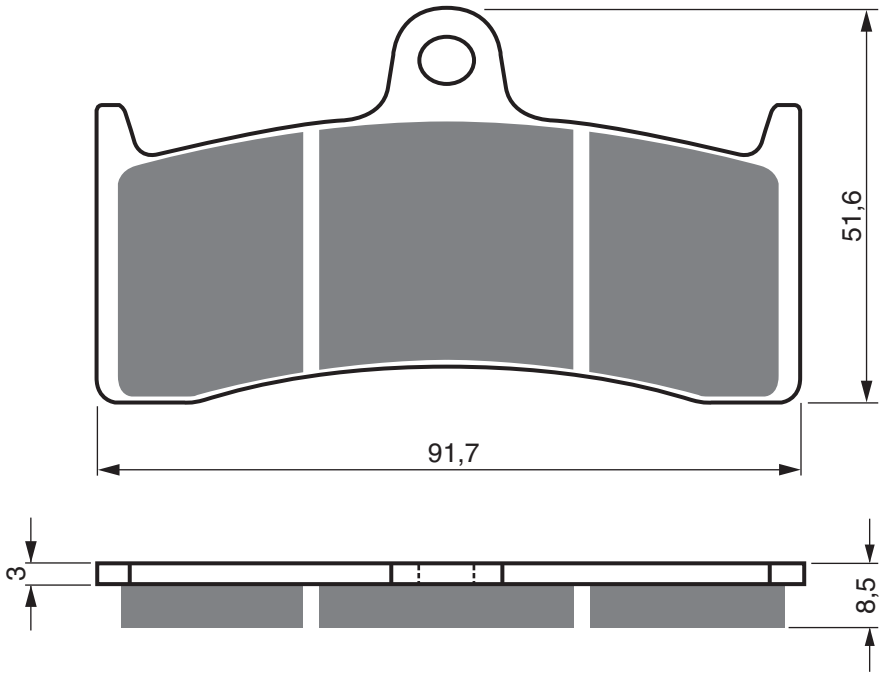

BUELL

M2	1 200	Cyclone®	1998 - 2005	FL	
S1	1 200	Lightning®	1998 - 2000	FL	
S1	1 200	White Lightning®	1998 - 2000	FL	
S3	1 200	Thunderbolt®	1998 - 2000	FL	
S3T	1 200	Thunderbolt®	1998 - 2000	FL	
X1	1 200	Lightning®	1998 - 2005	FL	

FOR BERINGER

		6 Piston (Old Design)		FL	

HHI

		6 Piston - All Types		FL	RR

HONDA

CB	1 300	FW/FX/FY (SC40)	1998 - 2000	FL	FR

KAWASAKI

ZX-7RR	750	(ZX 750 N1/N2)	1996 - 1999	FL	FR

MV AGUSTA

	750	Brutale Oro F4	2003 - 2005	FL	FR
	750	Brutale S F4	2003 - 2005	FL	FR
F4	750	SPR	2001 - 2004	FL	FR
F4	750	SPR Senna	2001 - 2003	FL	FR
F4S	750	(Mono Posto)	1999 - 2004	FL	FR
F4S	750	1+1 (Bi-Posto)	2001 - 2004	FL	FR
	910	Brutale S (Nissin Calipers)	2006 - 2008	FL	FR
F4	1 000	Ago	2005 - 2005	FL	FR
F4	1 000	S (Mono Posto)	2004 - 2006	FL	FR
F4	1 000	Ss 1+1 (Bi Posto)	2004 - 2006	FL	FR
F4	1 000	Tamburini	2005 - 2005	FL	FR

NISSIN

		6 piston racing caliper		FL	

PERFORMANCE MACHINES

		112 X 6B		FL	
		112 X 6QC		FL	
		125x6QC		FL	

PRE TECH

		6 Piston (Radial Mount)		FL	

THUNDERHEART CALIPER

		6 Piston Caliper		FL	

YAMAHA

YZF	750	R7 0W02 (Race Version)	1999 - 2001	FL	FR

EQUIVALENTS OEM

43082 1181	800094024	80009870	H0300F	06455 MBR 006

AD | S3

PART NUMBER

127

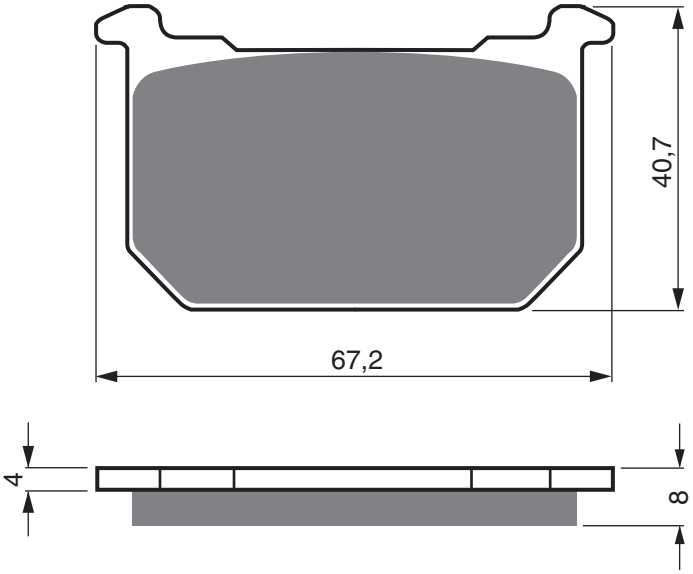

KAWASAKI

Z	250	A3	1981 - 1981	FL	FR	
Z	400	J2/J3	1980 - 1983	FL	FR	
Z	440	C2	1981 - 1981	FL		
Z	440	D5/D6 LTD	1983 - 1984	FL		
Z	440	H1/H2	1981 - 1981	FL		
GPZ	550	D1	1982 - 1982	FL	FR	RR
GPZ	550	H1/H2	1982 - 1983	FL	FR	RR
Z	550	A2/A3/C1/C2/LTD	1981 - 1984	FL	FR	
Z	650	F2/F3/F4	1981 - 1983	FL	FR	
Z	700	A1 "LTD"	1984 - 1984	FL	FR	RR
GPZ	750	R1	1982 - 1982	FL	FR	RR
GT	750	P1-P9	1982 - 1996	FL	FR	RR
Z	750	E1	1980 - 1980	FL	FR	RR
Z	750	H1/H2/LTD	1980 - 1981	FL	FR	RR
Z	750	L1/L2	1981 - 1982	FL	FR	RR
Z	750	L3	1983 - 1983	FL	FR	RR
Z	750	L4	1984 - 1984	FL	FR	RR
Z	750	LTD Belt Drive (KZ750B/K/9972/0)	1983 - 1984	FL	FR	RR
Z	750	LTD Twin (KZ750B/S/9972/0)	1982 - 1984	FL	FR	RR
Z	750	N1/N2 "Spectre"	1982 - 1983	FL	FR	RR
Z	750	Sp. (KZ750E/R/B635/0)	1983 - 1983	FL	FR	RR
Z	750	Y1 (LTD)	1982 - 1982	FL	FR	
KZ	1 000	P6-P16	1987 - 1997	FL	FR	RR
Z	1 000	J1/J2/J3	1981 - 1983	FL	FR	RR
Z	1 000	K1/K2 LTD	1981 - 1982	FL	FR	RR
Z	1 000	R1/R2 (Eddie Lawson Replica)	1982 - 1983	FL	FR	RR
GPZ	1 100	B1/B2	1982 - 1983	FL	FR	RR
Z	1 100	A1-A3	1981 - 1983	FL	FR	RR
Z	1 100	D1/D2 "Spectre"	1982 - 1983	FL	FR	RL
Z	1 100	GP (KZT10B/C170/0)	1981 - 1982	FL	FR	RR
Z	1 100	L1, LTD	1983 - 1983	FL	FR	RR
Z	1 100	ST (KZT10A/C077/0)	1981 - 1983	FL		

EQUIVALENTS OEM

43082 1007	43082 1008	43082 1021	43082 1022	43082 1025	43082 1026

PART NUMBER

128

AD | S3

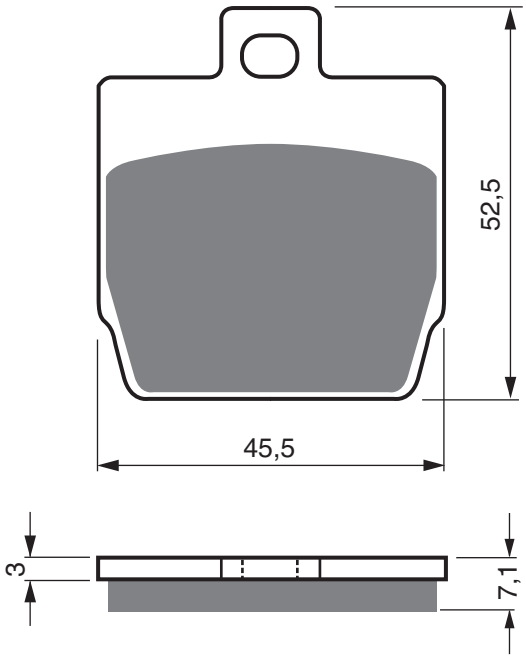

MBK

EW	50	Stunt	2000 - 2006	FL	
EW	50	Stunt Naked	2005 - 2010	FL	
YQ	50	Nitro	1997 - 2010	RR	
YQ	50	Nitro Naked	2006 - 2010	RR	

QUADRO

QV3			2018 - 2020	RL	RR
		Qooder	2018 - 2020	RL	RR

YAMAHA

EW	50	Slider	2000 - 2005	FL	
NS	50	Aerox (2T)	2013 - 2016	RR	
NS	50	F Aerox 4	2014 - 2018	RR	
NS	50	N Aerox Naked (2T)	2013 - 2016	RR	
YQ	50	Aerox R / Aerox	1997 - 2016	RR	

EQUIVALENTS OEM

5BR F5811 00	5BR FS811 10	1PH F5806 00

AD | S3

PART NUMBER

129

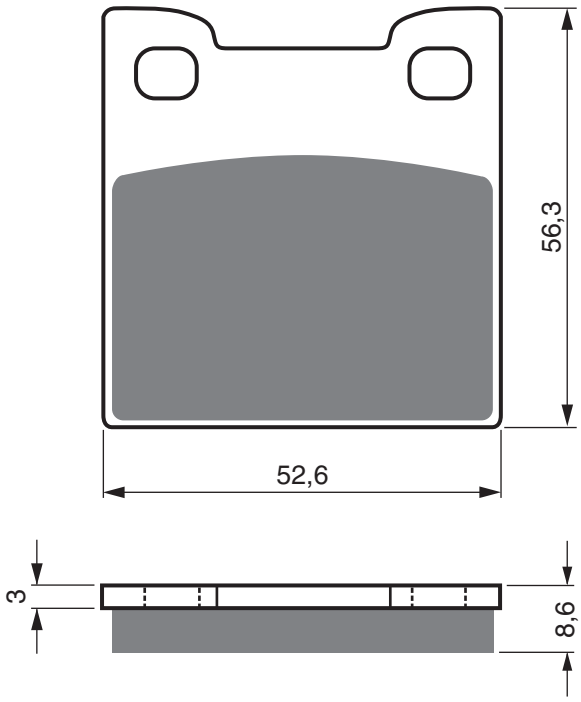

SUZUKI

RF	900	RR/RS/RS2	1994 - 1995	RR

EQUIVALENTS OEM

69100 31830	69130 31E00

PART NUMBER

130

AD | S3 | S33 RACING

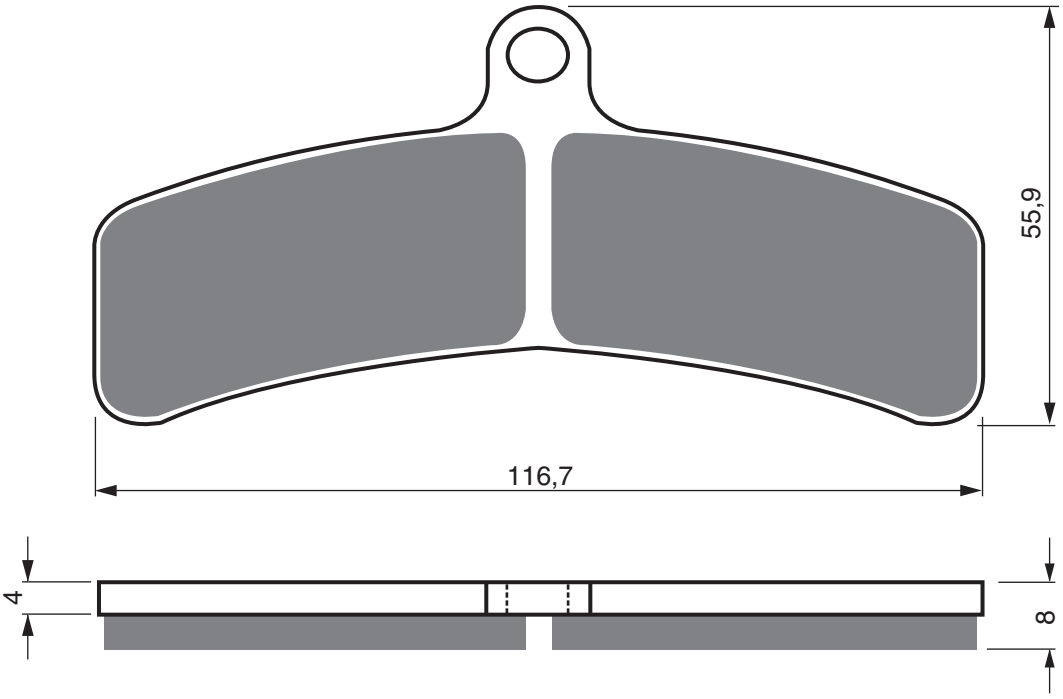

SPIEGLER BREMSTECHNIK

S 8B 8	Piston Lightweight caliper	FL

AD | S3

PART NUMBER

131

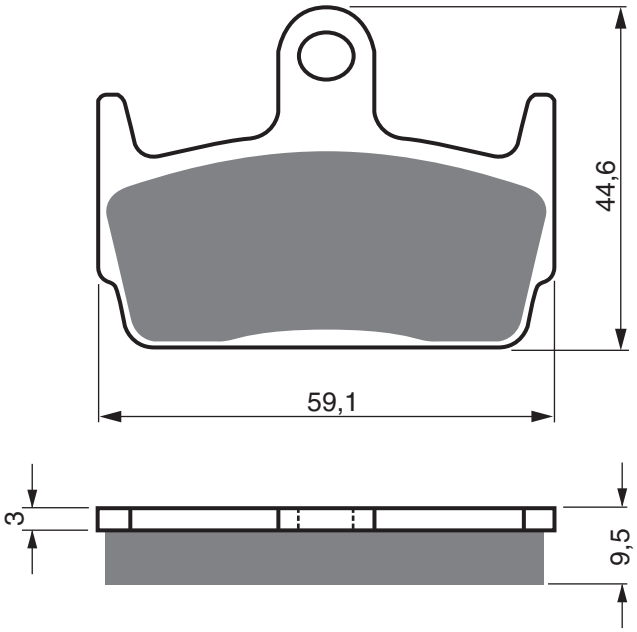

HONDA				
SZX	50	(X8R-S) SW/SX/SY/S1 "Supersport Scooter"	1998 - 2004	RR
SZX	50	(X8R-X) XW/XX/XY/X1 "Cross Sport Scooter"	1998 - 2004	RR
KYMCO				
	50	Sniper DD (PR50BB)	1994 - 1996	RR
	150	Heroism (SE30AD)	1995 - 1997	RR
SYM				
SR	50	Jet Sport X	2006 - 2015	RR

EQUIVALENTS OEM

06435 GCM 900	06435 GCM 902	43105 KBF 3050 MZ	43105 KBF 9000	45105 TFA 000 A

PART NUMBER

132

AD	S3	GP5	GP6	GP7

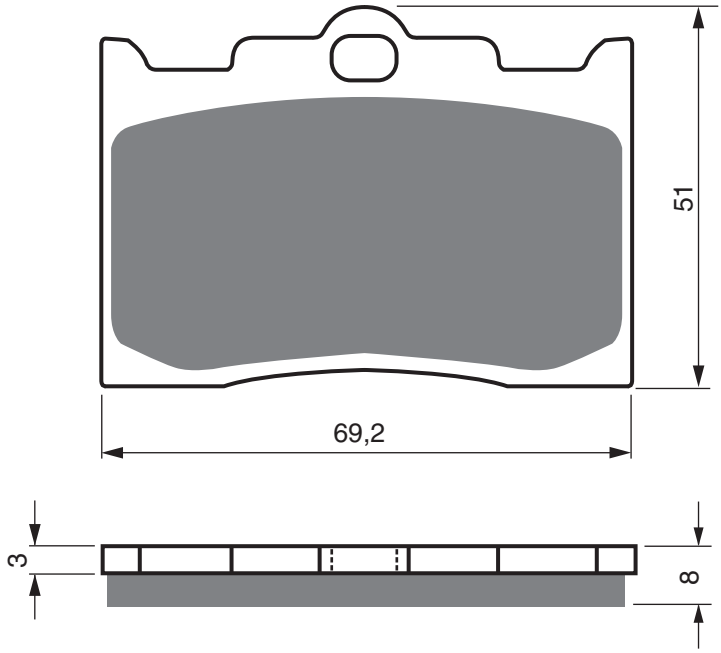

HHI

4 Pistons - All Types		FL	

INDIAN

Legends		FL	
Nova		FL	
Thunderheart		FL	
Chief -All Models Chief/Deluxe/Springfield/Road Master/ Vintage	2002 - 2008	FL	RR
Scout – All models Scout/Deluxe/Springfield	2002 - 2008	FL	RR
Spirit – All Models Deluxe/Springfield/Roadblaster	2002 - 2008	FL	RR

MOTOR FACTORY

4 piston caliper front/rear	FL

NOVA/LEGENDS

4 Piston	FL

PERFORMANCE MACHINES

124X4HR	FL
125 X 4R	FL
137 X 4	FL
137 X 4B	FL

REVTECH

New Black 4 Piston Caliper	FL

THUNDERHEART CALIPER

4 Piston Caliper	FL

EQUIVALENTS OEM

137X4

AD	S3	S33 RACING	GP5	GP6	GP7	GPR

PART NUMBER

134

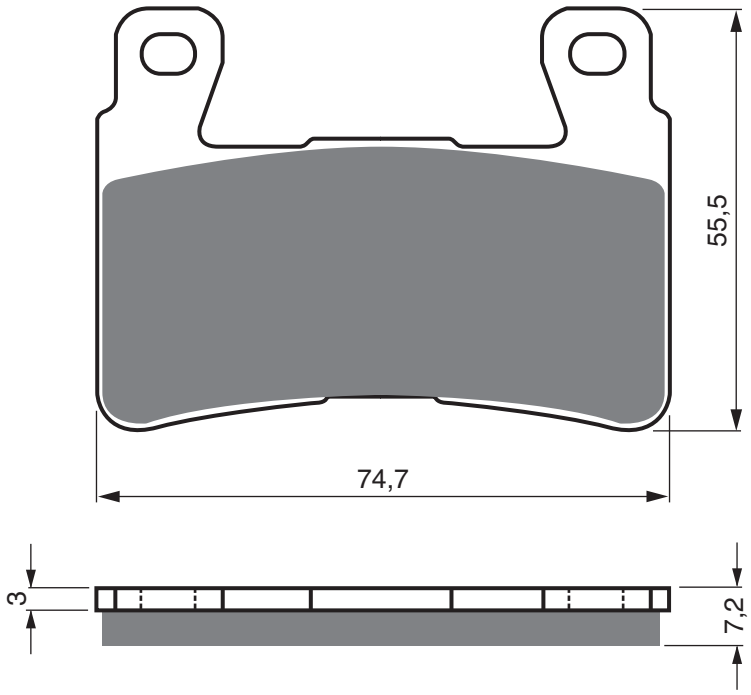

HARLEY DAVIDSON

FLFB		Fat Boy	2018 - 2018	FL	
FLFBS		Fat Boy 114	2018 - 2018	FL	
FLFBS		Fat Boy 114 Anniv	2018 - 2018	FL	
FLHCS		Heritage Classic 114 Anniv	2018 - 2018	FL	
FLSTC		Heritage Softail Classic	2015 - 2017	FL	
FXSB		Softail Breakout	2015 - 2017	FL	
FXST		Softail Standard	2015 - 2015	FL	
XR	1 200		2008 - 2010	FL	FR
XR	1 200	X	2010 - 2013	FL	FR
FLSTFB	1 584	Fat boy LO	2015 - 2017	FL	
FLS	1 690	Softail Slim	2015 - 2017	FL	
FLSTF	1 690	Fat Boy	2015 - 2017	FL	
FLSTN	1 690	Softail Deluxe	2015 - 2017	FL	
FLHC	1 750	Heritage Classic	2018 - 2018	FL	
FLSL	1 750	Softail Slim	2018 - 2018	FL	
FLSTFBS	1 801	Fat Boy S	2016 - 2018	FR	
FLHCS	1 870	Heritage Classic 114	2018 - 2018	FL	

HONDA

CB	400	SF4/5/S5 (NC39 - Superfour/Superfour Bol D'Or)	2004 - 2005	FL	FR
CB	400	SFX/SFY/SF1/SF2/SF3 Superfour (NC39 - Superfour/ Superfour Bol D'Or)	1999 - 2003	FL	FR
CBR	600	F1/F2	2001 - 2002	FL	FR
CBR	600	F3/F4/F5/F6	2003 - 2006	FL	FR
CBR	600	FS1/FS2 "Sport"	2001 - 2002	FL	FR
CBR	600	FX/FY	1999 - 2000	FL	FR
CBR	600	RR3/RR4	2003 - 2004	FL	FR
CBR	900	RR2/RR3 Fireblade (954cc)	2002 - 2003	FL	FR
CBR	900	RRW/RRX Fireblade (918cc)	1998 - 1999	FL	FR
CBR	900	RRY/RR1 Fireblade (929cc)	2000 - 2001	FL	FR
VTR	1 000	SP2/SP3/SP4/SP5/SP6 (SP2)	2002 - 2007	FL	FR
VTR	1 000	SPY/SP1 (SC45) (SP1)	2000 - 2001	FL	FR
CB	1 100	AE (Cast Wheels / 4 piston Caliper)	2014 - 2014	FL	FR
CB	1 300	F1 (SC40)	2001 - 2001	FL	FR

PEUGEOT

	125	Satelis	2013 - 2013	RR	

EQUIVALENTS OEM

06455 MAS E01	06455 MCF 006	06455 MCS 016	06455 MBW E11	06455 MFA D11	06455 MBW 006	42739 008
59330 H99 700	43082 0131	41300102				

PART NUMBER

135

AD | S3 | S33 RACING

A

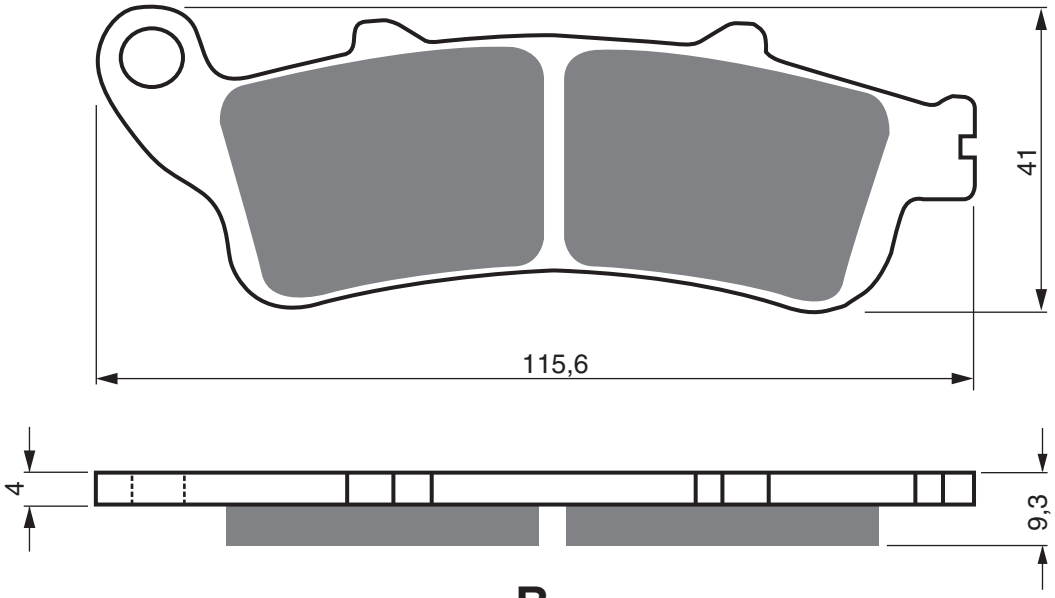

B

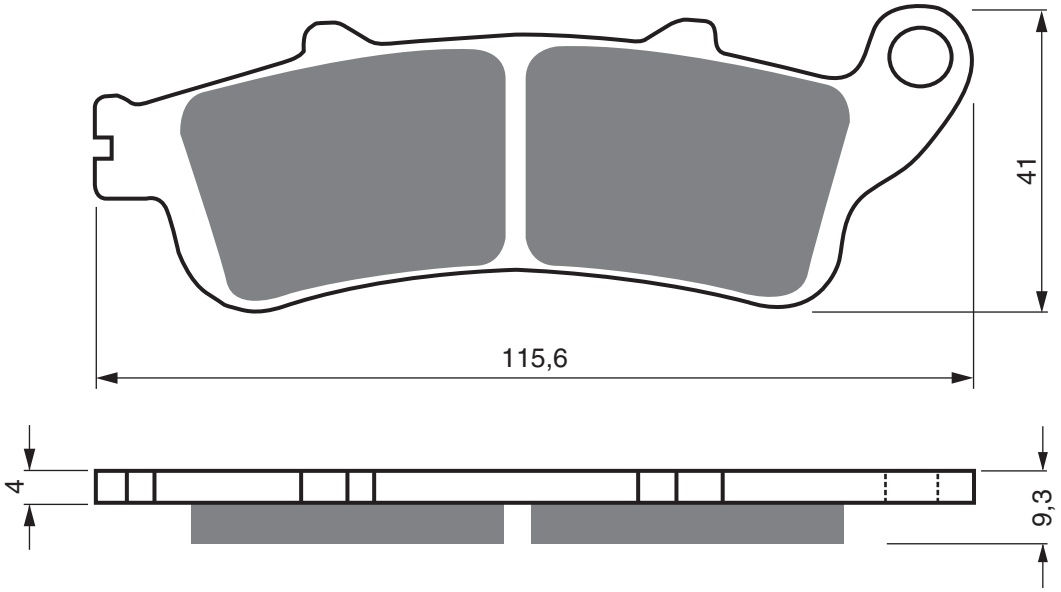

GARELLI

	250	Skynet	2002 - 2002	FL
	400	Skynet	2002 - 2002	FL

HONDA

FES	125	W/Y/1/2 Pantheon	1998 - 2002	FL
FES	125	3/4/5 Pantheon	2003 - 2006	FL
FES	150	W/Y/1/2 Pantheon	1998 - 2002	FL
FES	150	3/4/5 Phantom	2003 - 2006	FL
FES	250	W/X Foresight	1998 - 1999	FL
FES	250	Y/1/2/5 Foresight	2000 - 2005	FL
NSS	250	Y/AY/1/A1/A3/3 Forza/Forza-S/Forza-T/Forza-ST/Jazz/Reflex (MF04/MF06)	2000 - 2004	FL
FJS	400	D6/D7/D8 Silverwing (Non ABS 256mm front disc)	2006 - 2008	FL
FJS	600	1/2/B3/B4/D5/D6/D7/D8 Silverwing	2001 - 2008	FL

KAWASAKI

EN	650	Vulcan S (ABS)	2015 - 2021	FL
EN	650	Vulcan S (Non ABS)	2015 - 2021	FL
EN	650	Vulcan S Café (ABS)	2018 - 2020	FL
EN	650	Vulcan S SE (ABS)	2018 - 2020	FL

PEUGEOT

SV	250		2001 - 2002	FL

EQUIVALENTS OEM

06455 KFG 016	06455 KFG 641	06455 KPB 406	06455 KPB 416	119 481 00	754808	43082 0152
43082 0169						

AD | S3

PART NUMBER

136

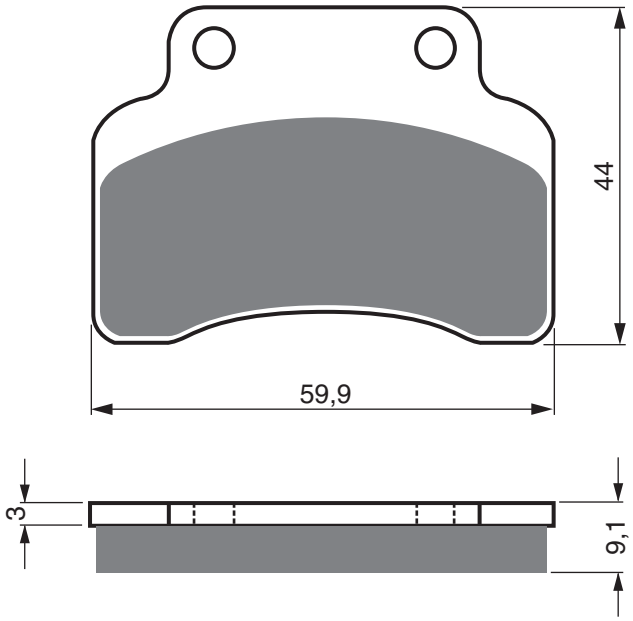

AJS					
	50	Digita	2013 - 2015	FL	
	50	Exactly	2008 - 2011	FL	
	50	Firefox	2013 - 2015	FL	
	125	Exactly Scooter (4T)	2008 - 2015	FL	
BAOTIAN					
BT	49	QT-12 Rebel (4T)	2006 - 2011	FL	
BEELINE					
	50	Veloce	2008 - 2010	FL	
	50	Veloce GT	2008 - 2010	FL	
BENELLI					
	50	Quattro Nove X (All Rear Drum models)	2008 - 2009	FL	
	50	Quattro Nove X (all models/rear disc model)	2010 - 2016	FL	RR
49X	50	Scooter	2007 - 2007	FL	
BRANSON					
BS	50	Cuba	2008 - 2008	FL	
BS	50	Sting	2008 - 2008	FL	
CAGIVA					
	50	Nag Scooter	2008 - 2008	FL	
CPI					
	50	Aragon	2007 - 2009	FL	
	50	Aragon Club	2007 - 2012	FL	
	50	Aragon S-Line	2007 - 2012	FL	
	50	Argon GP Paddock	2008 - 2012	FL	
	50	Formula Basic	2007 - 2008	FL	
	50	Formula R	2007 - 2008	FL	
	50	Freaky	2007 - 2007	FL	
	50	Hussar	2003 - 2005	FL	
	50	Oliver (All Models)	2006 - 2012	FL	
	50	Popcorn	2003 - 2006	FL	
GP	50	Aragon	2007 - 2012	FL	
	125	Aragon S-Line	2007 - 2012	FL	
GP	125	Aragon	2007 - 2012	FL	
	125	Ona (4T)	2004 - 2006	FL	RR
	125	Scoo (4T)	2004 - 2006	FL	RR
GARELLI					
	50	Flexi	2009 - 2012	FL	
	50	Tesse (2T/4T)	2008 - 2010	FL	
GP	50	(2T)	2009 - 2010	FL	
VIP	50		2007 - 2007	FL	
XO	50	(2T/4T)	2009 - 2009	FL	
XO	50	(TM 50 QT-31) (2T/4T)	2010 - 2012	FL	RR
	125	Flexi	2009 - 2012	FL	
GENERIC					
	50	Cracker (2T/4T)	2009 - 2018	FL	
	50	Epico Electric	2012 - 2013	FL	
	50	Evolution (2T)	2010 - 2011	FL	
	50	Ideo	2005 - 2005	FL	
	50	Race 2 (2T/4T)	2010 - 2014	FL	
	50	Roc	2008 - 2011	FL	
	50	Sirion (2T/4T)	2012 - 2018	FL	
	50	Stroke	2008 - 2008	FL	
	50	Toxic Sport (2T)	2012 - 2018	FL	
GT	50	Race Explorer	2009 - 2009	FL	
XOR	50		2005 - 2014	FL	
	125	Race 2 (4T)	2010 - 2014	FL	
	125	Sirion (4T/Rear Drum Model)	2012 - 2018	FL	
	125	Soho	2006 - 2015	FL	
	125	Stroke	2008 - 2008	FL	
XOR	125		2005 - 2011	FL	
	150	Soho	2006 - 2015	FL	
GOES					
	50	Slam (Scooter)	2010 - 2012	FL	
G	50	RT (Scooter)	2013 - 2014	FL	
	125	Wiki (Scooter)	2010 - 2012	FL	
G	125	RT Retro (Scooter)	2010 - 2012	FL	
HP POWER					
	50	Tin (4T/4V)	2010 - 2012	FL	

PART NUMBER

136

AD | S3

ITALJET

SX1	50	Scooter	2008 - 2009	FL

KEEWAY

		Matrix Electric	2009 - 2010	FL
	50	F-Act	2007 - 2010	FL
	50	F-Act Evo City (2T)	2009 - 2015	FL
	50	F-Act Evo DD (2T)	2009 - 2015	FL
	50	F-Act Nkd	2009 - 2011	FL
	50	F-Act Racing (24/25)	2010 - 2012	FL
	50	F-Act RS	2010 - 2011	FL
	50	Flash Electric	2009 - 2010	FL
	50	Focus	2006 - 2007	FL
	50	Matrix	2006 - 2012	FL
	50	Matrix V4 (25/50)	2010 - 2011	FL
	50	Swan (25/45)	2010 - 2011	FL
RY6	50	(25/45)	2010 - 2011	FL
RY8	50	(All models)	2007 - 2010	FL
RY8	50	Racing (25/45)	2010 - 2011	FL
RY8	50	SP (25/45)	2010 - 2011	FL
	100	F-Act	2008 - 2010	FL
	125	F-Act	2007 - 2011	FL
	125	Matrix	2007 - 2010	FL
	150	F-Act	2007 - 2010	FL
	150	Focus	2006 - 2006	FL
	150	Matrix	2007 - 2010	FL

KM (KEENMOTORBIKES)

	50	Badboy CX	2005 - 2005	FL
	100	Badboy CX	2005 - 2005	FL

KREIDLER

	50	City (50cc/2T/A-C)	2014 - 2015	FL
	50	Florett 2.1 RS (2T/A-C)	2014 - 2015	FL
	50	Florett City (2T/A-C)	2014 - 2015	FL
	50	Vabene	2012 - 2012	FL

KYMCO

	25	/50 Matrix	2006 - 2008	FL
	50	Calypso	1997 - 1997	FL
	50	Heroism (SE10BA)	1995 - 1997	FL
DJW	50	World (PR50AD)	1995 - 1997	RR
	125	Calypso	1999 - 1999	FL
	125	Heroism (SE25BA)	1995 - 1997	FL
	125	Matrix	2006 - 2008	FL
	150	Heroism (SE30AD)	1995 - 1997	FL

MASH

	50	Bibop	2014 - 2016	FL
	50	Bibop Racing	2014 - 2016	FL

MOTO-ROMA

	50	G10 (50cc/2T)	2011 - 2012	FL
	125	Lambros /4T	2011 - 2012	FL

MOTOM

	50	Gypsy	2008 - 2009	FL
	125	Dolcevita	2008 - 2009	FL
	151	Dolcevita	2008 - 2009	FL

PEUGEOT

	50	E-Vivacity (Electric)	2010 - 2010	FL

RIEJU

	50	Pacific (4T)	2008 - 2008	FL
	50	Toreo (4T)	2007 - 2008	FL
	125	Pacific (4T)	2008 - 2008	FL
	125	Pacific Scooter	2009 - 2009	FL

SACHS

ER	49	12"	2008 - 2008	FL
	50	Speedjet (2T)	2008 - 2008	FL
	50	Speedforce (2T)	2008 - 2008	FL
SX-1	50	(2T)	2008 - 2009	FL
	125	Speedjet RS	2010 - 2010	FL

SFM

	50	Speedjet (2T)	2014 - 2015	FL
	50	Speedjet R (2T)	2014 - 2015	FL
	50	Speedjet RS 3 (2T)	2014 - 2015	FL

SINNIS

	50	Pioneer (2T)		FL
LJ	50	QT-H (Rear disc model)	2012 - 2014	FL
LJ	50	QT-H Phoenix (Rear drum model)		FL
WY	50	T-39A Ghost	2006 - 2010	FL
ZN	50	QT-51 Flair	2012 - 2014	FL
	125	Pioneer	2009 - 2010	FL
ZN	125	T-22 Harrier	2012 - 2014	FL

TAMORETTI

	125	Stealth		FL

W.K.BIKES

WK	50	GP2 (2T)	2010 - 2014	FL
WK	50	One (2T)	2010 - 2012	FL

EQUIVALENTS OEM

45150 KBK 9000 MZ	45106 B08E00	45110 J4FT 000	R0200710080	GA023463 1T	404210 TAC 000

AD S3

PART NUMBER

137

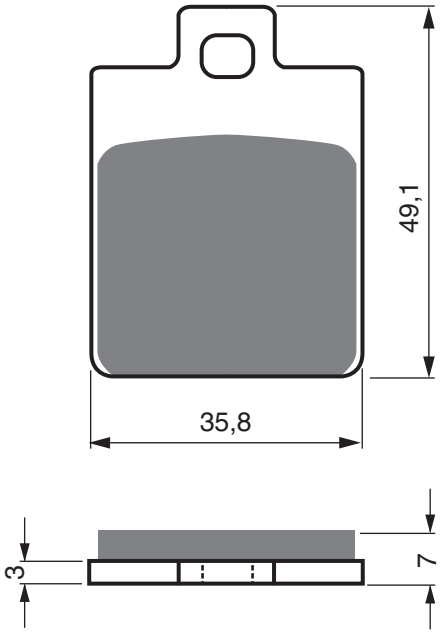

ADIVA SCOOTERS						
AD1	125	(3 Wheel Type)	2014 - 2015	FL	FR	RR
AD1	150	(3 Wheel Type)	2014 - 2015	FL	FR	RR
AD3	300	(3 Wheel Type)	2014 - 2015	FL	FR	
CPI						
GTR	50	(2 Pin Pad Fixing Front Caliper)	2002 - 2002	RR		
GTS	50		2002 - 2003	RR		
GTR	125	(2 Pin Pad Fixing Front Caliper)	2002 - 2002	RR		
GTS	125		2002 - 2003	RR		
GTR	150	(2 Pin Pad Fixing Front Caliper)	2002 - 2002	RR		
GTS	200		2002 - 2003	RR		
DERBI						
	50	Sonar 2S (2T)	2010 - 2011	FL		
	125	Sonar (4T)	2010 - 2011	FL		
	150	Sonar (4T)	2009 - 2010	FL		
GILERA						
	50	DD/SP Runner SP/Pujeret	1999 - 2004	RR		
	50	Runner PJ/SP	2006 - 2014	RR		
	50	Stalker	1997 - 2006	RR		
DNA	50	(Grimeca Caliper)	2001 - 2006	RR		
DNA	50	(Heng Tong Caliper)	2001 - 2005	RR		
SKP	50		1999 - 2001	RR		
	125	Runner All models	1999 - 2004	RR		
	180	Runner All models	1999 - 2004	RR		
	500	Fuoco LT (4V/4T)	2013 - 2015	FL	FR	
	500	Fuoco RC/ie	2007 - 2013	FL	FR	
ITALJET						
	125	Formula (4T/Single Cyl)	2014 - 2015	RR		
KEEWAY						
	150	Cityblade	2013 - 2015	RR		
KREIDLER						
	50	Galactica 3.0 LC (2T/L-C)	2014 - 2015	RR		
RS	50	Galactica 3.0 (2T/A-C)	2014 - 2015	RR		
PEUGEOT						
	50	1/2 Speedfight (L/C)	1997 - 2008	RR		
	50	New Tweet Evo (4T/Rear disc model)	2014 - 2015	RR		
	50	Tweet RS (4T/ Rear Disc Model)	2010 - 2013	RR		
	125	Belville Allure	2018 - 2020	RR		
	125	Belville RS	2018 - 2020	RR		
	125	Citystar (AC/Carb)	2011 - 2015	RR		
	125	i Citystar (LC)	2013 - 2019	RR		
	125	New Tweet Evo (4T / Rear disc model)	2014 - 2020	RR		
	125	New Tweet Evo (4T)	2014 - 2020	RR		
	125	New Tweet Evo RS (4T)	2014 - 2020	RR		
	125	Satelis Blue Line	2015 - 2015	RR		
	125	Satelis RS (4T)	2013 - 2013	RR		
	125	Tweet (4T/Rear Disc Model)	2012 - 2013	RR		
	125	Tweet RS (4T/Rear Disc Model)	2010 - 2013	RR		
	150	Citystar (AC/Carb)	2011 - 2015	RR		
	150	Citystar i (LC)	2013 - 2015	RR		
	150	Citystar One	2013 - 2014	RR		
	150	New Tweet Evo (4T)	2014 - 2018	RR		
	150	New Tweet Evo RS (4T)	2014 - 2018	RR		
	150	Tweet (4T)	2010 - 2019	RR		
	150	Tweet RS (4T/Rear Disc Model)	2010 - 2012	RR		
	200	Belville Allure	2018 - 2019	RR		
	200	Belville RS	2018 - 2019	RR		
	200	Citystar i	2012 - 2018	RR		
PGO						
	125	Tigra (4T/4V)	2012 - 2012	RR		
PIAGGIO VESPA						
		Liberty Elettrico	2011 - 2012	FL		
	50	Liberty (Grimeca Caliper) (2T/5 Spoke Wheels)	1997 - 2008	FL		
	50	Liberty (Heng Tong Caliper) (2T/5 Spoke Wheels)	1997 - 2008	FL		
	50	Liberty 4T (Grimeca Caliper) (5 Spoke Wheels)	2000 - 2008	FL		
	50	Liberty 4T (Heng Tong Caliper) (5 Spoke Wheels)	2000 - 2008	FL		
	50	Liberty S (2T/4T)	2007 - 2008	FL		
ET2	50	(Vespa)	1997 - 2005	FL		
ET4	50	Vespa (Grimeca Caliper)	2000 - 2004	FL		
ET4	50	Vespa (Heng Tong caliper)	2000 - 2004	FL		
LX	50	(2T/4T)	2005 - 2013	FL		
LXV	50		2007 - 2009	FL		
NRG	50	Extreme (Rear Disc Models)	1999 - 2001	RR		
NRG	50	MC3 DD	2001 - 2005	RR		
NRG	50	Power DD	2005 - 2005	RR		
NRG	50	Power DD	2006 - 2018	RR		
NRG	50	Pure Jet	2006 - 2009	RR		

PART NUMBER

137

AD | S3

NRG	50	RST "MC2" (Rear Disc Models)	1998 - 1998	RR	
NRG	50	Silver Bullet	2010 - 2010	RR	
S	50	(2T)	2007 - 2013	FL	
S	50	(4T/4V)	2009 - 2013	FL	
S	50	Sport (2T/4T)	2011 - 2013	FL	
S	50	Sport (4T/4V)	2011 - 2013	FL	
ZIP	50	(2T)	2000 - 2015	FL	
Zip	50	(2T/4T)	2000 - 2015	FL	
ZIP	50	(4T)	2000 - 2020	FL	
ZIP	50	(Grimeca caliper) (A/C 4T)	2000 - 2008	FL	
ZIP	50	RST	1996 - 1999	FL	
ZIP	50	SP (2T)	2013 - 2015	FL	
ZIP	50	SP (Liquid cooled)	1996 - 2012	FL	
ZIP	100		2006 - 2013	FL	
	125	Liberty (5 Spoke Wheels)	1998 - 2008	FL	
	125	Liberty S	2007 - 2008	FL	
	125	Liberty (4T/3V) (10 Spoke Cast Wheels)	2009 - 2012	FL	
	125	Liberty (3V/4T) (10 Spoke Cast Wheels)	2013 - 2015	FL	
	125	Liberty (Full Optional/4T) (10 Spoke Cast Wheels)	2013 - 2015	FL	
ET4	125	Vespa	1996 - 2005	FL	
LX	125	(4T)	2005 - 2012	FL	
LX	125	(4T/Serie Special)	2012 - 2012	FL	
LXV	125		2007 - 2013	FL	
MP3	125	(Carb Models) (12" Rear Wheel)	2006 - 2008	FL	FR
MP3	125	Hybrid	2009 - 2012	FL	FR
MP3	125	Hybrid (14" rear wheel)	2009 - 2012	FL	FR
MP3	125	ie (EFi Models)	2008 - 2011	FL	FR
MP3	125	Yourban ie	2011 - 2012	FL	
PX	125	(Disc Brake Model) (2T) (From 01/05/2011)	2011 - 2016	FL	
S	125	(4T)	2007 - 2013	FL	
S	125	Sport (4T)	2011 - 2013	FL	
ZIP	125	(4T - 175mm F/Disc)	2002 - 2004	FL	
ZIP	125	(4T - 200mm F/Disc)	2000 - 2001	FL	
	150	Liberty (3V/4T) (10 Spoke Cast Wheels)	2013 - 2015	FL	
	150	Liberty (4T/2V) (10 Spoke cast wheels)	2009 - 2012	FL	
	150	Liberty (5 Spoke Wheels)	2008 - 2008	FL	
	150	Liberty (Full optional/4T/3V) (10 Spoke Wheel)	2013 - 2015	FL	
ET4	150	Vespa	1999 - 2005	FL	
LX	150	(4T)	2005 - 2011	FL	
LX	150	(4T/Serie Special)	2012 - 2012	FL	
S	150	(4T)	2007 - 2012	FL	
S	150	Sport (4T)	2011 - 2012	FL	
	200	Liberty	1998 - 2007	FL	
	200	Liberty S	2007 - 2008	FL	
	200	Liberty	1998 - 2007	FL	
MP3	250	(EFI) (12" Rear Wheel)	2006 - 2008	FL	FR
MP3	250	LT (EFi) (14" Rear Wheel)	2009 - 2009	FL	FR
MP3	250	MIC/EFi (14" rear wheel)	2008 - 2009	FL	FR
MP3	300	Business LT ie	2013 - 2013	FL	FR
MP3	300	ie (Hybrid LT)	2011 - 2013	FL	FR
MP3	300	ie (Hybrid)	2011 - 2015	FL	FR
MP3	300	ie Yourban Sport LT	2011 - 2016	FL	FR
MP3	300	LT (EFi)	2010 - 2011	FL	FR
MP3	300	Sport LT ie	2013 - 2013	FL	FR
MP3	300	Touring ie	2011 - 2012	FL	FR
MP3	300	Touring LT ie	2011 - 2012	FL	FR
MP3	300	Yourban LT ie	2011 - 2016	FL	FR
MP3	300	Yourban LT RL	2017 - 2018	FL	FR
MP3	300	Yourban Sport ie	2011 - 2016	FL	FR
MP3	400	ie	2007 - 2010	FL	FR
MP3	400	LT ie	2009 - 2010	FL	FR
MP3	400	Touring ie	2011 - 2012	FL	FR
MP3	400	Touring LT ie	2011 - 2012	FL	FR
MP3	500	EFi	2009 - 2010	FL	FR
MP3	500	LT Business	2011 - 2015	FL	FR
MP3	500	LT Business ABS (13" Front Wheel/14" Rear Wheel))	2014 - 2020	FL	FR
MP3	500	LT Sport	2011 - 2015	FL	FR
MP3	500	LT Sport ABS (13" Front Wheel/14" Rear Wheel)	2014 - 2018	FL	FR
MP3	500	Touring Business ie	2011 - 2012	FL	FR
MP3	500	Touring Sport ie	2011 - 2012	FL	FR
SACHS					
	125	Speedjet RS	2010 - 2010	RR	
SFM					
	50	Speedjet RS 3 (2T)	2014 - 2015	RR	
SYM					
	50	Symphony S (4T) Rear Disc Model	2010 - 2020	RR	
	50	Symphony SR (4T/Rear Disc Model)	2010 - 2015	RR	
	125	Symphony S (4T) Rear Disc Model	2010 - 2020	RR	
	125	Symphony SR (4T) Rear Disc Model	2010 - 2015	RR	
	151	Symphony S (4T) Rear Disc Model	2010 - 2015	RR	
	151	Symphony SR (4T) Rear Disc Model	2010 - 2015	RR	
W.K.BIKES					
WK	50	GTR (2T)	2010 - 2014	RR	

EQUIVALENTS OEM

494097	494938	498846	494938	647157	647073	647170
651356	665621	666573	43105 ARB 000A	PE 802219	PE 756676	PE 757243

AD | S3

PART NUMBER

138

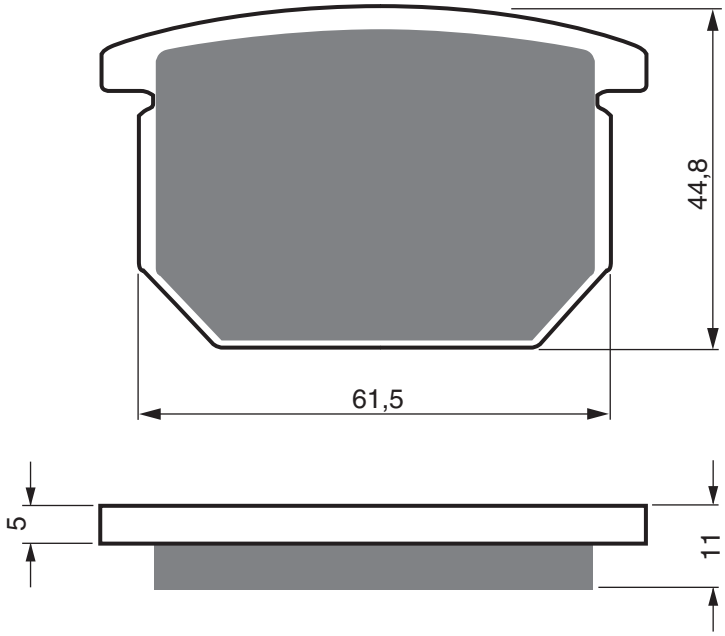

SUZUKI

GS	550	ET/EX/EZ/LT/LX/MX/MZ	1980 - 1984	FL	FR
GR	650	D/XD Tempter	1983 - 1983	FL	FR
GS	650	GTX/GTZ/GTD/GX/GZ	1981 - 1983	FL	FR
GS	750	SD	1984 - 1983	FL	FR
GSX	750	S-2/S-2C (GS75X-114747-) Katana	1984 - 1984	FL	FR
GSX	750	S/SS (G57SX-106815-) Katana	1984 - 1984	FL	FR
XN	850	Turbo	1983 - 1983	FL	FR
GS	1 000	ET	1981 - 1981	FL	FR
GSX	1 000	SZ Katana	1982 - 1982	FL	FR
GSX	1 100	ET/EX/EZ/ESD	1980 - 1983	FL	FR
GSX	1 100	SZ/SD Katana	1982 - 1983	FL	FR

EQUIVALENTS OEM

59300 49820	59300 49821	59300 49850

PART NUMBER

139

AD	S3	GP5	GP6	GP7

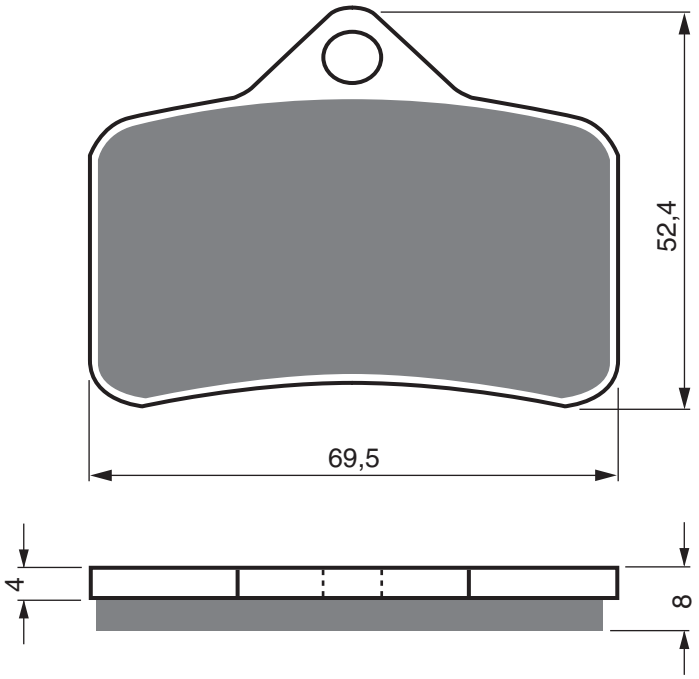

SPIEGLER BREMSTECHNIK

S4B4 piston caliper FL

AD	K5	S3

1 set = 4 pcs

PART NUMBER

140

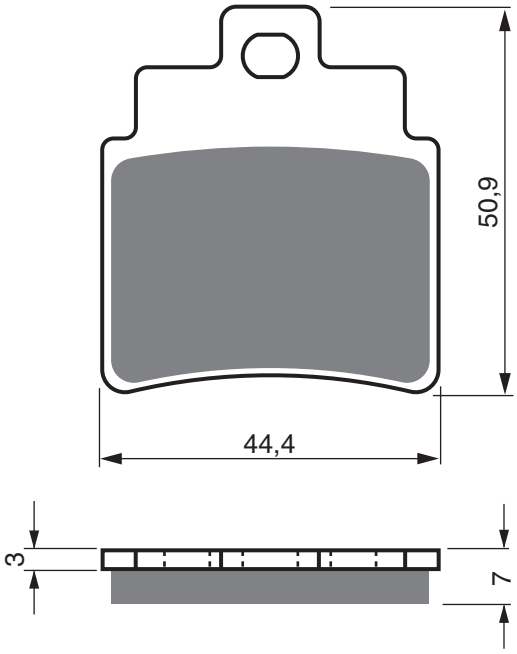

ARCTIC CAT

DVX	250	Sport	2006 - 2008	RR
DVX	300		2009 - 2014	RR

GILERA

	250	Oregon Quad	2007 - 2007	RR

KYMCO

	250	Grand Dink	2001 - 2006	FL
	250	Maxxer	2012 - 2013	RR
	250	Urban Quad	2006 - 2006	RR
KXR	250	Mongoose Quad	2004 - 2007	RR
MXU	250		2004 - 2013	RR
	300	Maxxer	2006 - 2013	RR

MASAI

A	300	Quad	2005 - 2007	RR
A	450	Quad	2005 - 2007	RR

SYM

GTS	125	i Joymax (All models)	2010 - 2015	FL
GTS	125	i Sport (All models)	2014 - 2015	FL
	250	i Joymax	2007 - 2008	FL
	250	Joymax	2006 - 2006	FL
	250	Voyager	2005 - 2005	FL
	250	Voymax	2006 - 2006	FL
GTS	250		2007 - 2008	FL
GTS	250	i Joymax (All models)	2009 - 2015	FL
	300	Cruisym	2017 - 2020	FL
	300	Joymax Z ABS	2017 - 2020	FL
GTS	300	i Sport (All models)	2014 - 2015	FL
GTS	300	Joymax (All Models)	2008 - 2015	FL

EQUIVALENTS OEM

45105 HMA 000A	45106 KKC4 9000	00156924

PART NUMBER

141

AD	S3	S33 RACING	GP5	GP6	GP7	GPR

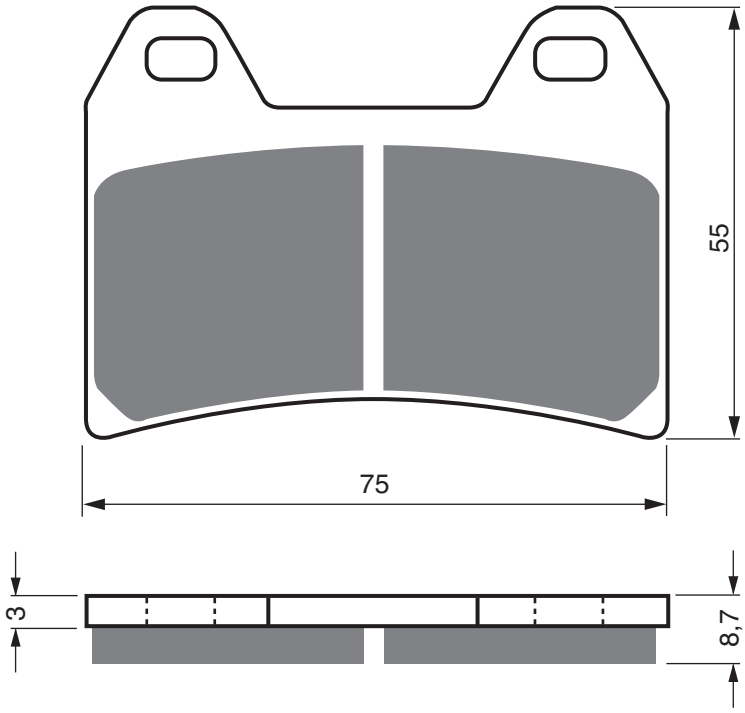

ALTA MOTORS (ELECTRIC)

		Redshift SM	2016 - 2018	FL	

APRILIA

RS	250		1998 - 2002	FL	FR
	650	Pegaso	2007 - 2008	FL	
	650	Pegaso Factory	2006 - 2008	FL	
	650	Pegaso Strada	2005 - 2006	FL	
	750	Dorsoduro Factory	2010 - 2013	FL	FR
	750	Dorsoduro Factory (ABS)	2010 - 2012	FL	FR
	1 000	Tuono R (Radial Caliper / 2 pad type)	2002 - 2010	FL	FR
	1 000	Tuono R (Radial Caliper / 4 Pad Type)	2002 - 2005	FL	FR
	1 000	Tuono V4R	2011 - 2012	FL	FR
	1 000	Tuono V4R-APRC	2011 - 2013	FL	FR
ETV	1 000	Caponord	2001 - 2002	FL	FR
RST	1 000	Futura	2001 - 2004	FL	FR
RSV	1 000	Mille	1998 - 2000	FL	FR
RSV	1 000	Mille R	2000 - 2000	FL	FR
RSV	1 000	Mille SP	1999 - 2000	FL	FR
RSV	1 000	R Tuono	2002 - 2006	FL	FR
RSV	1 000	R Tuono (Radial Caliper / 2 pin pad fixing)	2007 - 2008	FL	FR
SL	1 000	Falco	2000 - 2004	FL	FR
	1 200	Dorsoduro	2011 - 2012	FL	FR
	1 200	Dorsoduro ATC/ABS	2011 - 2014	FL	FR

BENELLI

	150	Uno C (Single Cyl)	2013 - 2013	FL	
	250	Uno C (Single)	2013 - 2013	FL	
TRE	502	K	2016 - 2016	FL	
BN	600	GT (2pin / 2pad F/Caliper)	2014 - 2014	FL	FR
2-UE	750		2009 - 2010	FL	FR
	800	Leonciono	2020 - 2021	FL	FR
	800	Trail	2020 - 2021	FL	FR
TNT	899	S Tornado Naked Tre	2007 - 2011	FL	FR
TNT	899	Tornado Naked Tre	2007 - 2016	FL	FR
TRE-K	899		2007 - 2016	FL	FR
	900	Tornado	2002 - 2002	FL	FR
TNT	1 130	Cafe Racer	2005 - 2005	FL	FR
TNT	1 130	Titanium	2005 - 2005	FL	FR
TNT	1 130	Tornado Naked Tre	2006 - 2007	FL	FR
TRE	1 130	K	2006 - 2017	FL	FR
TRE	1 130	K Amazonas	2007 - 2015	FL	FR

BIMOTA

		Later Models	1998 - 1999	FL	
SB8K	996	Gobert (Suzuki engine)	2006 - 2006	FL	FR

BMW

G	650	XMoto (Cast Wheel)	2007 - 2009	FL	
F	800	GT	2013 - 2020	FL	FR
F	800	R	2009 - 2014	FL	FR
F	800	R Chris Pfeifer Edition	2009 - 2011	FL	FR
F	800	S (Half Fairing)	2006 - 2017	FL	FR
F	800	ST (Full Fairing)	2006 - 2012	FL	FR
F	800	ST Touring	2010 - 2017	FL	FR
R	1 200	Nine T Cafe Racer (K32) (1170cc)	2016 - 2021	FL	FR
R	1 200	Nine T Pure (K22) (1170cc)	2016 - 2021	FL	FR
R	1 200	Nine T Scrambler (K21) (1170cc)	2016 - 2021	FL	FR
R	1 200	Nine T Urban GS (K33) (1170cc)	2017 - 2021	FL	FR

BRAMMO

		Empulse R	2012 - 2013	FL	

BREMBO RACING CALIPERS

		20 6800 10/20 - Goldline 4 Piston P4 30/34 @ 65 mm Spacing (Two Pin Pad Fixing)		FL	
		220A16810 P4 30/34 2 pin Pad Fixing 100mm Radial mount		FL	
		220A16820 P30/34 Yamaha R1 RAdial Mount	2007 - 2010	FL	
		220A80210 P4 30/34 2 Pin Pad Fixing 108mm Radial Mount		FL	
		220A80310 P4 30/34 2 Pin Pad Fixing 100mm Radial Mount		FL	
		XA69510 P4 30/34 Motard Radial 108mm Mount 2 pad fixing		FL	
		XZ78910 P4 30/34 Motard radial 100mm Mount 2 pin Fixing		FL	

AD | S3 | S33 RACING | GP5 | GP6 | GP7 | GPR

PART NUMBER

141

CAGIVA

	650	Raptor	2000 - 2007	FL	FR
	1 000	Raptor	2000 - 2005	FL	FR
	1 000	V-Raptor	2000 - 2005	FL	FR

CF MOTO

CLX	700		2021 - 2021	FL	FR
MT	800		2021 - 2021	FL	FR

DUCATI

	400	Monster (Japan)	2000 - 2004	FL	
	400	Monster (Single Disc)	2000 - 2002	FL	
	400	Monster (Twin Disc)	2003 - 2004	FL	FR
	400	Monster Dark ie (Japan)	2005 - 2006	FL	
	400	Monster Dark ie (Single Disc)	2005 - 2005	FL	
	600	Monster	2000 - 2001	FL	
	620	IE Monster (First Series)	2002 - 2005	FL	FR
	620	Monster Dark	2003 - 2004	FL	
	620	Monster ie (Single Disc)	2003 - 2004	FL	
	620	Multistrada (Twin Disc/Single Pin Pad Fixing)	2006 - 2006	FL	FR
	620	Sport	2003 - 2003	FL	FR
	696	Monster	2008 - 2014	FL	FR
	696	Monster + (inc ABS Models)	2009 - 2012	FL	FR
	696	Monster 20th Aniversary Model	2013 - 2013	FL	FR
	748	Biposto	1999 - 2002	FL	FR
	748	R (2 Pad caliper)	2000 - 2000	FL	FR
	748	S (Biposto)	2000 - 2002	FL	FR
	748	S (Monoposto)	2000 - 2002	FL	FR
	748	SP/Monoposto	1999 - 2002	FL	FR
	748	SPS (748/H199)	1998 - 1999	FL	FR
	748	Testa Bassa (Mono/Biposto)	2007 - 2007	FL	FR
	750	Monster	2000 - 2001	FL	FR
	750	Monster ie	2002 - 2002	FL	FR
	750	Sport	2001 - 2002	FL	FR
	750	Supersport	1999 - 1999	FL	FR
	750	Supersport IE	2000 - 2002	FL	FR
	796	Hypermotard	2010 - 2013	FL	FR
	796	Monster (ABS models)	2010 - 2014	FL	FR
	796	Monster (Non ABS Models)	2010 - 2013	FL	FR
	796	Monster 20th Aniversary Model (ABS & Non ABS)	2013 - 2013	FL	FR
	800	Monster	2003 - 2004	FL	FR
	800	Sport	2003 - 2003	FL	FR
	800	Supersport	2003 - 2005	FL	FR
	848	(Radial 2 Pad Caliper)	2008 - 2010	FL	FR
	848	Streetfighter	2011 - 2015	FL	FR
	900	MH Evoluzione	2000 - 2001	FL	FR
	900	Monster IE	2000 - 2001	FL	FR
	900	Sport	2002 - 2002	FL	FR
	900	Supersport	1998 - 1999	FL	FR
	900	Supersport IE	2000 - 2001	FL	FR
	916	Monster S4	2001 - 2002	FL	FR
	916	Monster S4 Foggy	2002 - 2002	FL	FR
ST4	916		1999 - 2002	FL	FR
ST2	944		1997 - 1999	FL	FR
ST2	944		2000 - 2003	FL	FR
ST3	992	(Non ABS)	2004 - 2007	FL	FR
ST3S	992	(ABS Model)	2006 - 2007	FL	FR
	996	(Monoposto/Biposto)	1999 - 2001	FL	FR
	996	S	2001 - 2001	FL	FR
	996	SPS (996cc)	1999 - 1999	FL	FR
S4R	996	Monster	2003 - 2006	FL	FR
S4R	996	Monster (2 pad caliper)	2005 - 2006	FL	FR
ST4S	996	cc (ABS)	2003 - 2005	FL	FR
ST4S	996	cc (Non ABS Model)	2001 - 2005	FL	FR
	998	(Monoposto / Biposto) (2 Pad caliper)	2002 - 2003	FL	FR
	998	Matrix	2004 - 2004	FL	FR
	1 000	Monster Dark	2003 - 2003	FL	FR
	1 000	Monster ie (992cc)	2004 - 2005	FL	FR
	1 000	Monster S ie (992cc)	2003 - 2005	FL	FR
	1 000	Multistrada DS (992cc)	2003 - 2006	FL	FR
	1 000	Multistrada S DS (992cc)	2005 - 2006	FL	FR
	1 000	Supersport DS (992cc)	2003 - 2006	FL	FR
S2R	1 000	Monster (992cc)	2006 - 2008	FL	FR
	1 100	EVO Hypermotard	2010 - 2012	FL	FR
	1 100	Hypermotard	2007 - 2009	FL	FR
	1 100	Monster (ABS & Non ABS)	2009 - 2010	FL	FR
	1 100	Monster Diesel	2013 - 2013	FL	FR
	1 100	Monster EVO	2011 - 2013	FL	FR
	1 100	Monster EVO - 20th Anniversary Model	2013 - 2013	FL	FR
	1 100	Multistrada (1078cc)	2007 - 2009	FL	FR
	1 100	S Monster (ABS & Non ABS)	2009 - 2010	FL	FR
	1 100	S Multistrada (1078cc)	2007 - 2009	FL	FR
	1 200	Multistrada S Granturismo	2013 - 2014	FL	FR
	1 200	Multistrada ABS	2010 - 2014	FL	FR
	1 200	Multistrada S Pikes Peak	2011 - 2014	FL	FR
	1 200	Multistrada Standard	2010 - 2011	FL	FR
	1 200	S Multistrada Sport Edition	2010 - 2012	FL	FR
	1 200	S Multistrada Touring Edition	2010 - 2014	FL	FR

HONDA

CB	400	SF (F3V) Superfour (NC31)	1997 - 1997	FL	FR

HOREX

VR6	1 200	Classic	2013 - 2014	FL	FR
VR6	1 200	Roadster	2011 - 2014	FL	FR

HUSQVARNA

	570	Nox	2001 - 2003	FL	
LT	610	(6 Bolt Front Disc)	2000 - 2000	FL	
SM	610		2005 - 2005	FL	
SM	610	(6 bolt front disc)	1998 - 2000	FL	
SM	610	R	2000 - 2000	FL	
SM	610	S	2002 - 2006	FL	
SM	610	S (4 bolt front disc)	2002 - 2006	FL	
	701	Svartpilen	2018 - 2020	FL	
	701	Vitpilen	2018 - 2020	FL	
	900	Nuda	2012 - 2013	FL	FR

KAWASAKI

ZXR	250	(ZX 250 A1/A2)	1989 - 1990	FR	

KEEWAY

RKX	125		2013 - 2014	FL	

KTM

SMC	625		2004 - 2006	FL	
	640	Duke II (2 pin pad fixing / Disc with Zero Offset)	1999 - 2002	FL	
	640	Duke II (2 pin pad fixing/disc with offset)	2003 - 2007	FL	
LC4	640	SC Supermoto	2003 - 2006	FL	
LC4	640	Supermoto	1999 - 2002	FL	
LC4-E	640		2003 - 2006	FL	
LC4-E	640	(2 pin fixing)	2004 - 2006	FL	
SMC	640	LC4	2005 - 2005	FL	
LC4	660	Factory Replica	2005 - 2006	FL	
SMC	660		2005 - 2006	FL	
SMC	660		2005 - 2006	FL	
	690	Duke (2-pin Pad Fixing) (Multi Spoke Cast Wheels)	2013 - 2020	FL	
	690	Duke (2 pin pad fixing / 5 Spoke Cast Wheels)	2012 - 2012	FL	
LC4	690	Supermoto	2007 - 2007	FL	
SM	690		2007 - 2009	FL	
SM	690	LE (Limited Edition)	2010 - 2011	FL	
	790	Adventure R	2018 - 2020	FL	FR
	790	Duke	2018 - 2020	FL	FR
	1 050	Adventure	2015 - 2016	FL	FR
	1 090	Adventure	2017 - 2019	FL	FR
	1 090	Adventure R	2017 - 2020	FL	FR

PART NUMBER

141

AD | S3 | S33 RACING | GP5 | GP6 | GP7 | GPR

	1 190	Adventure	2013 - 2016	FL	FR
	1 190	Adventure R	2013 - 2016	FL	FR
	1 290	Super Adventure	2015 - 2016	FL	FR
	1 290	Super Adventure R ABS	2017 - 2020	FL	FR
	1 290	Super Adventure S ABS	2017 - 2020	FL	FR
	1 290	Super Adventure T ABS	2017 - 2017	FL	FR

MAGNI

	1 200	Sport S	2001 - 2001	FL	

MOTO-GUZZI

	750	Nevada	2002 - 2011	FL	
	750	Nevada (Club)	2003 - 2004	FL	
	750	Nevada Classic ie (Spoke wheels)	2004 - 2015	FL	
	750	Nevada Touring	2007 - 2007	FL	
V	750	ie Breva (3 spoke cast wheels)	2003 - 2007	FL	
V7	750	Cafe Classic	2009 - 2012	FL	
V7	750	Classic	2008 - 2012	FL	
V7	750	Clubman Racer	2010 - 2011	FL	
V7	750	Racer	2010 - 2017	FL	
V7	750	Racer II (ABS/Spoke Wheel)	2015 - 2017	FL	
V7	750	Special (Spoke wheel)	2012 - 2014	FL	
V7	750	Special II (ABS/Cast Wheel)	2015 - 2017	FL	
V7	750	Special III (ABS /Spoke Wheel)	2017 - 2020	FL	
V7	750	Stone (Cast wheel)	2012 - 2014	FL	
V7	750	Stone II (ABS/Spoke Wheel)	2015 - 2017	FL	
V7	750	Stone III (ABS/ Cast Wheel)	2017 - 2020	FL	
V7	750	Stornello II	2016 - 2017	FL	
	850	Breva ie (Non ABS models)	2006 - 2007	FL	FR
	850	Griso	2006 - 2007	FL	FR
	850	Norge	2007 - 2007	FL	FR
V85	850	TT	2018 - 2020	FL	FR
V9	850	Bobber	2016 - 2019	FL	FR
V9	850	Roamer	2016 - 2020	FL	FR
	1 100	Breva (ABS)	2005 - 2007	FL	FR
	1 100	Breva (Non ABS models)	2005 - 2007	FL	FR
	1 100	California 90	2012 - 2012	FL	FR
	1 100	California Aluminium	2002 - 2005	FL	FR
	1 100	California Aquila Nera	2009 - 2011	FL	FR
	1 100	California Classic Touring	2006 - 2008	FL	FR
	1 100	California EV (From KD115427 / 2 pin pad fixing)	1997 - 2002	FL	FR
	1 100	California EV Touring	2003 - 2005	FL	FR
	1 100	California Jackal (2pad pin Fixing/From KD152329)	1994 - 2001	FL	FR
	1 100	California Special (From KD131645/2 pin pad fixing)	1999 - 2000	FL	FR
	1 100	California Sport	2001 - 2002	FL	FR
	1 100	California Stone	2001 - 2005	FL	
	1 100	California Stone Metal	2002 - 2003	FL	
	1 100	California Titanium (With Top Fairing)	2004 - 2005	FL	FR
	1 100	California Touring	2006 - 2007	FL	FR
	1 100	California Vintage	2006 - 2012	FL	FR
	1 100	Griso	2005 - 2008	FL	FR
	1 100	Griso 8V (Standart/Cast Wheel/Radial Caliper)	2007 - 2012	FL	FR
V11	1 100	Ballabio	2003 - 2005	FL	FR
V11	1 100	Le Mans	2001 - 2005	FL	FR
V11	1 100	Naked	2002 - 2003	FL	FR
V11	1 100	Scura	2001 - 2003	FL	FR
V11	1 100	Sport	1999 - 2001	FL	FR
	1 200	Breva	2008 - 2009	FL	FR
	1 200	Griso 8v (1151cc/Cast Wheel/Rad.cal.)	2009 - 2011	FL	FR
	1 200	Griso 8V (Special Edition/Spoke Wheel/Radial Caliper)	2007 - 2015	FL	FR
	1 200	Griso 8v (Std - Cast Wheel/Radial Caliper)	2007 - 2012	FL	FR
	1 200	Norge	2006 - 2007	FL	FR
	1 200	Sport (2V)	2007 - 2009	FL	FR
	1 200	Sport (4V)	2006 - 2007	FL	FR
	1 200	Sport (8V)	2008 - 2013	FL	FR
	1 200	Sport 8V SE	2012 - 2012	FL	FR
	1 200	Stelvio	2008 - 2011	FL	FR
	1 200	Stelvio 8V (ABS)	2011 - 2015	FL	FR
	1 200	Stelvio 8v NTX (ABS)	2011 - 2015	FL	FR
	1 200	Stelvio NTX ABS	2009 - 2010	FL	FR
GT	1 200	Norge 8V (ABS)	2008 - 2015	FL	FR
	1 400	Audace	2015 - 2016	FL	FR
	1 400	Audace Carbon	2016 - 2017	FL	FR
	1 400	California Custom	2013 - 2015	FL	FR
	1 400	California Touring	2013 - 2020	FL	FR
	1 400	California Touring SE	2015 - 2017	FL	FR
	1 400	Eldorado	2015 - 2017	FL	FR
MGX	1 400	21	2016 - 2020	FL	FR

MOTO-MORINI

MM3	1 187		2007 - 2007	FL	FR
	1 200	Corsaro	2005 - 2010	FL	FR
	1 200	Corsaro Avio	2008 - 2009	FL	
	1 200	Corsaro Veloce	2007 - 2008	FL	FR
	1 200	Scrambler	2008 - 2009	FL	FR
	1 200	Sport	2008 - 2010	FL	FR
9 1/2	1 200		2006 - 2010	FL	FR

MOTUS

MST			2014 - 2018	FL	FR

MV AGUSTA

	675	Brutale	2012 - 2017	FL	FR
F3	675		2012 - 2020	FL	FR
	800	Brutale	2012 - 2018	FL	FR
	800	Brutale Dragster	2014 - 2015	FL	FR
	800	Brutale Rosso	2019 - 2020	FL	FR
	800	Brutale RR	2019 - 2020	FL	FR
	800	Brutale RR SCS	2019 - 2020	FL	FR
	800	Dragster RC	2017 - 2020	FL	FR
	800	Dragster Rosso	2019 - 2020	FL	FR
	800	Dragster RR	2015 - 2020	FL	FR
	800	Dragster RR SCS	2019 - 2020	FL	FR
	920	Brutale	2011 - 2012	FL	FR
	989	Brutale	2008 - 2009	FL	FR
	990	Brutale R	2010 - 2011	FL	FR
	1 090	Brutale	2013 - 2015	FL	FR
	1 090	Brutale R	2012 - 2015	FL	FR

NORTON

	961	Commando Sport	2010 - 2020	FL	FR

SCORPA

	660	Raidster (Rear pad with large friction area)	2007 - 2007	FL	

SUZUKI

GSX	400	FSV/FSK1 (GK7B) Inazuma	2000 - 2000	FL	
GSX	400	X Impulse	1999 - 1999		
GSX	1 200	FSW/FSX Inazuma	1998 - 1999	FL	FR
GSX	1 200	FSW/FSX Inazuma	1998 - 1999		

URAL

		Cross with Sidecar (Brembo 2 pin pad fixing)	2011 - 2012	FL	
		Ranger with Sidecar (Brembo 2 pin pad fixing)	2011 - 2012	FL	
		Retro with Sidecar (Brembo 2 pin pad fixing)	2011 - 2012	FL	
		Solo ST (Brembo 2 pin pad fixing)	2011 - 2012	FL	
		Sportsman with Sidecar (Brembo 2 pin pad fixing)	2011 - 2012	FL	
		Tourist with Sidecar (Brembo 2 pin pad fixing)	2011 - 2012	FL	
		Ural T (Brembo 2 pin pad fixing)	2011 - 2012	FL	
		Wolf Solo (Brembo 2 pin pad fixing)	2011 - 2012	FL	

VICTORY

		All Models	1998 - 2007	FL	
		Empulse TT	2016 - 2016	FL	FR
		Ness Signature Series	2005 - 2007	FL	
		Vegas	2003 - 2007	FL	
V92SE		(Special Edition)	2000 - 2000	FL	

AD | S3 | S33 RACING | GP5 | GP6 | GP7 | GPR

PART NUMBER

141

V92TC		(Special Edition)	2003 - 2006	FL	FR
	1 500	Hammer S	2007 - 2007	FL	FR
	1 500	King Pin	2004 - 2007	FL	
	1 500	King Pin Tour	2004 - 2007	FL	
	1 500	Vegas 8-Ball	2005 - 2007	FL	
V92C	1 500	(Standard Cruiser)	1998 - 2002	FR	
V92DH	1 500	(Deluxe Cruiser)	2001 - 2002	FL	
V92SC	1 500	(Sport Cruiser)	2000 - 2001	FL	
	1 634	Hammer	2005 - 2007	FL	FR
	1 634	Vegas Jackpot	2006 - 2007	FL	

VOXAN

		Black Magic	2004 - 2008	FL	FR
		Cafe Racer	2006 - 2008	FL	FR
		Street Scrambler	2007 - 2008	FL	
VB1-EVO			2003 - 2004	FL	FR
	1 000	Roadster	2006 - 2008	FL	FR

YAMAHA

FZ	400	(4YR1)	1996 - 1996	FL	FR
XJR	400	(4MH3/4HM5/4HM6/4HM9/4HMA/4HMB) Brembo Calipers	1995 - 1999	FL	FR
XT	660	X Supermoto	2004 - 2016	FL	
XJR	1 200	(Italy)	1995 - 1995	FL	FR
XJR	1 300	(5EA1/5EA7) Brembo calipers (320 mm front disc)	1998 - 1999	FL	

EQUIVALENTS OEM

06455 MY9 871	4HM W0045 00	4HM W0045 50	59100 03860	613 4 0201 A	613 4 0211 B	613 4 0411 A
8113754	8113720	8133614	8000 88772	8000 95542	000016546300	587 13 030 000
R30000126000	2202492	1D2 W0045 00	211082018	4KG W0045 10	107 6708 21	34 11 7 69 65 93
34 11 7 711 498	M13400001400	GU01654630	750 13 030 000	883673	8000B1593	8000B6714
8537246	GU32654610	07BB19RC	107670823	07BB1950	45120 580 000	603 13 130 000
07 0708 21						

PART NUMBER

142

AD | S3

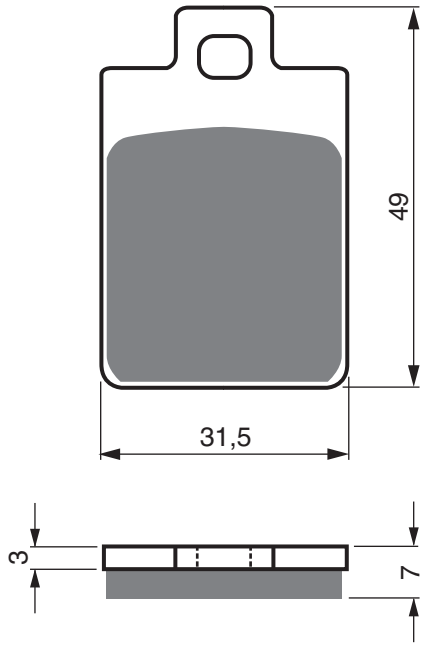

PIAGGIO VESPA

RST	50	Sfera	1995 - 1997	FL
	125	Sfera	1995 - 1997	FL
	125	Sfera 4T	1996 - 2001	FL
	125	Typhoon	1996 - 1998	FL

EQUIVALENTS OEM

498846

AD	K1	K5	S3

PART NUMBER

143

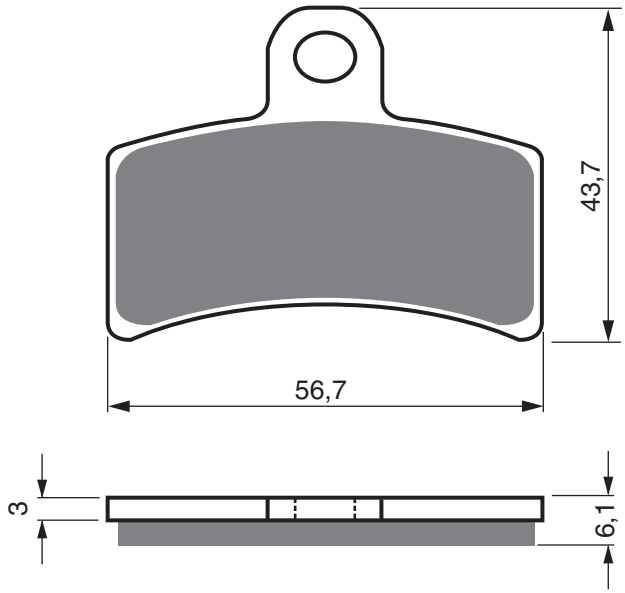

GAS GAS

TXE		Electric Bike	2020 - 2020	FL	
EC	50		2005 - 2005	RR	
EC	50	Boy	2001 - 2004	FL	RR
EC	50	Rookie	2001 - 2004	RR	
MC	50	Cross	2006 - 2006	FL	
SM	50		2005 - 2005	RR	
SM	50	Rookie	2001 - 2004	RR	
TXT	50		2001 - 2002	FL	RR
TXT	50	Boy	2001 - 2001	FL	RR
TXT	80		2001 - 2002	FL	RR
TXT	80	(Rookie)	2002 - 2003	FL	RR
	125	Pampera	2004 - 2004	RR	
TXT	125		1999 - 2003	FL	RR
TXT	125	Racing (2T)	2021 - 2021	FL	
TXT	125	GP (2T)	2020 - 2020	FL	
TXT	200		1999 - 2003	FL	RR
TXT	249		1999 - 2003	FL	RR
	250	Pampera	2002 - 2002	RR	
	250	Pampera	2004 - 2004	RR	
TXT	250	Racing (2T)	2021 - 2021	FL	
TXT	250	GP (2T)	2020 - 2020	FL	
TXT	270		1999 - 2003	FL	RR
	280	Pampera	2004 - 2004	RR	
TXT	280		1999 - 2003	FL	RR
TXT	280	Racing (2T)	2021 - 2021	FL	
TXT	280	GP (2T)	2020 - 2020	FL	
TXT	280	Boy	2001 - 2001	FL	RR
TXT	300	Racing (2T)	2021 - 2021	FL	
TXT	300	GP (2T)	2020 - 2020	FL	
TXT	321		1999 - 2003	FL	RR

EQUIVALENTS OEM

BT-27922065	BT-280022065

PART NUMBER

144

AD	K1	K5	K5-LX	S3	S33 RACING

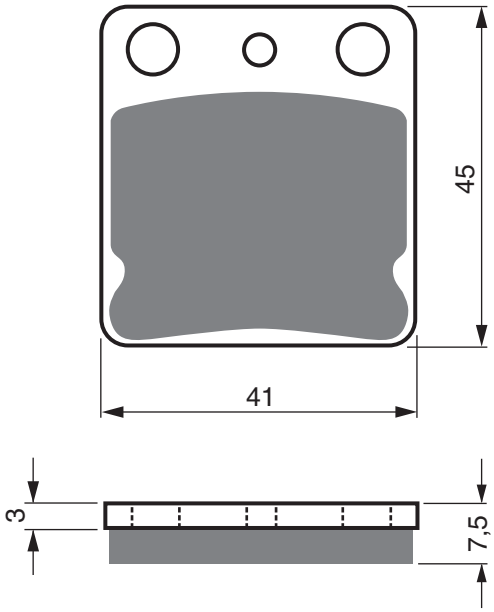

AJS					
DD	50	E/E2 Regal Raptor	2004 - 2006	FL	
JSM	50	Motard	2012 - 2015	RR	
JS	125	-E/E2 (Eco 125)	2007 - 2009	FL	
JS	125	E (Eco-2 125)	2009 - 2015	FL	
JSM	125	Motard	2010 - 2015	RR	
ASPES					
	150	Perseo Hybrid	2011 - 2014	FL	
CCM					
C-XR	125	E	2008 - 2009	RR	
C-XR	125	M	2007 - 2009	RR	
C-XR	125	S	2008 - 2009	RR	
C-XR	230	E	2007 - 2009	RR	
C-XR	230	M	2007 - 2009	RR	
C-XR	230	S	2007 - 2009	RR	
LX	350	-4A Quad	2008 - 2009	FL	FR
LX	700	- 4 A Quad	2008 - 2009	FL	FR
DAELIM					
	50	Tapo Message	2004 - 2004	FL	
	125	Altino	2001 - 2004	FL	
	125	Altino ES	2001 - 2004	FL	
	125	History	2001 - 2006	FL	RR
NS	125	DLX/III Trans Eagle	2003 - 2007	FL	RR
NS	125	Otello DLX	2000 - 2002	FL	
S1	125	(SL125)	2007 - 2014	RR	
SL	125	Otello Fi	2007 - 2009	RR	
SN	125	B-Bone	2009 - 2014	RR	
SQ	125	S2 Freewing	2007 - 2009	RR	
GARELLI					
	150	Fashion F	2007 - 2007	FL	
HONDA					
MB	50	S	1980 - 1982	FL	
MG	50	S/X/1/3 Magna	1995 - 2003	FL	
MRX	50		1988 - 1988	FL	
MBX	80	FWDD/FWDF	1983 - 1986	FL	FR
CB	125	RS	1983 - 1983	FL	
CBX	125	TS Custom	1982 - 1982	FL	
CG	125	ES4-ES8	2004 - 2008	FL	
CG	150	ESD Titan	2004 - 2005	FL	
CG	150	KS/ES Titan	2004 - 2005	FL	
CBX	200	Strada	1997 - 2001	FL	
ATC	250	RB	1981 - 1981	FL	
HYOSUNG					
XRX	125	LC Enduro	2014 - 2015	FL	
XRX	125	LC Supermoto	2014 - 2015	FL	
TE	400		2005 - 2005	FL	
TE	450	Quad Rapier	2006 - 2009	FL	FR
JIALING					
JH	125	B Roadster	1998 - 1998	FL	
KAWASAKI					
KX	65	A1/A2/A3/A4/A5/A6/A6F/A7F/A8F/A9F/AAF/ABF/ACF/ ADF/AEF/AFF/AGF/AHF/AJF	2000 - 2021	RR	
	125	Ninja ABS	2019 - 2020	RR	
BN	125	A1/A2 Eliminator	1998 - 1999	FL	
KH	125	K1	1983 - 1983	FL	
KLX	125	CAF/CBF/CCF/CCS/CDS/CDF/CEF/CFF/CGF	2010 - 2016	RR	
KLX	125	DAF/DBF/DCF/DDF/DEF (D-Tracker)	2010 - 2014	RR	
Z	125	(BR125 GGF/GHF Auto G/Box)	2016 - 2020	RR	
Z	125	PRO (BR125 HGF/JHF Manual G/Box)	2016 - 2020	RR	
Z	125	Pro SE (BR 125 JJFS Manual G/Box)	2018 - 2020	RR	
KLX	140	(17" Front/14" Rear)	2008 - 2020	RR	
KLX	140	G (21" Front/18" Rear)	2017 - 2020	RR	
KLX	140	L (19" Front/16" Rear)	2008 - 2020	RR	
KLX	150	D-Tracker (KLX 150HGF)	2016 - 2016	RR	
KLX	150	L (KLX 150 EFF)	2014 - 2015	RR	
KLX	230		2019 - 2020	RR	
KLX	230	R	2019 - 2020	RR	
KVF	300	A1-A4/B1-B4/(Prairie 4x4/2x4)	1999 - 2002	FL	FR
KVF	360	A1-A3/A6F/A7F/A8F/A9F/AAF/ABF/ACF/ADF Prairie	2003 - 2013	FL	FR
KVF	360	B1-B3/B6F-B9F	2003 - 2009	FL	FR
KVF	360	C1-C3/C6F/C7F/C8F Prairie (All Models)	2003 - 2008	FL	FR
KVF	400	A1/A2/B1 Prairie	1997 - 1998	FL	FR
KVF	400	C1/C2/C3/C4 (Prairie 4x4)	1999 - 2002	FL	FR
KVF	400	D1/D2/D3/D4 (Prairie 2x4)	1999 - 2002	FL	FR
KEEWAY					
	250	Dragon Quad	2007 - 2009	RR	
KREIDLER					
	125	Enduro (4T)	2014 - 2015	RR	
	125	Supermoto (4T)	2014 - 2015	RR	
LEXMOTO					
LSM	50	(STR50)	2012 - 2016	RR	
	125	Adrenaline (XFLM125GY-2B)	2013 - 2018	RR	
	125	Adrenaline EFi (XFLM125GY-2B-E4)	2015 - 2018	RR	
	125	Gladiator (SB125T-23B)	2014 - 2018	FL	
LSM	125	(STR125YB)	2012 - 2018	RR	
MX	125	WY125T-108	2015 - 2018	RR	

AD	K1	K5	K5-LX	S3	S33 RACING

PART NUMBER

144

MASH

	125	Black Seven	2017 - 2020	RR	
	125	Brown Edition	2018 - 2020	RR	
	125	Café Racer	2014 - 2016	RR	
	125	Café Racer	2017 - 2020	RR	
	125	Dirt Track	2018 - 2020	RR	
	125	Seventy Five	2014 - 2016	RR	
	125	Seventy Five (Classic)	2017 - 2020	RR	
	250	Black Seven	2017 - 2020	RR	
	250	Café Racer	2017 - 2018	RR	
	250	Two Fifty	2017 - 2020	RR	

PEUGEOT

	50	New Vivacity (50cc/2T) (12" wheels/200mm dia disc)	2008 - 2014	FL	
	50	New Vivacity (50cc/4T) (12" wheels/200mm dia disc)	2008 - 2014	FL	
	50	New Vivacity Sixties (50cc/4T) (12" wheels/200mm disc)	2010 - 2013	FL	
	125	Sum-Up	2008 - 2011	FL	

PGO

	50	Bugrider (Buggie)	2006 - 2006	RR	
	150	Bugrider		RR	
BR	150	A Bugxter	2005 - 2007	RR	
	250	Bugrider		RR	
	250	SS Bugrider (Single Seat)		RR	

PIZZA PEDS

	125	Pizza Delivery Scooter (4T)	2012 - 2015	FL	

POLARIS

	250	Trail Boss 4x4	1987 - 1987	FL	FR

QUADZILLA

RV	125	Midi RV Bug		RR	
BR	150	E Bugrider	2004 - 2006	RR	
RV	150	Midi RV Buggie		RR	
BR	200		2007 - 2008	RR	
BR	250			RR	
XRV	250			RR	
XL	300			RR	

SACHS

	50	Mad Ass (4T)	2006 - 2009	RR	
	125	Mad Ass (4T)	2006 - 2009	RR	

SINNIS

LJ	50	QT-H (Rear disc model)	2012 - 2014	RR	
	125	Apache SM	2015 - 2020	RR	
	125	Apache SMR	2017 - 2020	RR	
	125	Blade X	2015 - 2020	RR	
JS	125	6H ST	2013 - 2014	FL	
QM	125	GY-2B Blade	2009 - 2014	RR	
QM	125	GY-2B(A) Apache (Rear disc model)	2009 - 2014	RR	
QM	125	T Matrix	2010 - 2010	FL	
QM	125	T-10H Matrix II	2010 - 2014	FL	
QM	125	T-10R Eagle	2010 - 2014	FL	
QM	125	T-8G Ecocity	2007 - 2014	FL	

SUPERBYKE

RMR	125		2007 - 2009	RR	

SUZUKI

RM	65	K3/K4/K5	2003 - 2005	RR	
DF	125			FL	
DR	125	SEX/SEY	1999 - 2001	FL	
DR	125	SF/SH/SJ	1985 - 1994	FL	
TS	125	XUF/UXG/XUH/XUJ	1985 - 1990	FL	
DF	200	EV/EW/EY (SH42A)	1998 - 2000	FL	
DR	200	G/H/J	1986 - 1989	FL	
DR	200	SE Trojan	1996 - 2013	FL	
DR	200	SEK1-SEK9	2001 - 2009	FL	
DR	200	SEP/SER/SES/SEV/SEW/SEX/SEY Djebel (SH42A)	1993 - 2000	FL	
SX	200	R/R2/RJ/RM	1990 - 1991	FL	
LT-F	250	K2/K3/K4/K5/K6/K7/K8/K9/L2/L3/L4 Ozark	2002 - 2014	FL	FR
TS	250	XE/XG/XH/XJ/XK	1985 - 1989	FL	
LT-A	400	FK2/FK3/FK4/FK5/FK6/FK7 Eiger 4WD	2002 - 2007	FL	FR
LT-F	400	FK2/FK3/FK4/FK5/FK6/FK7 (Eiger 4WD)	2002 - 2007	FL	FR
LT-F	400	K2-K7	2002 - 2007	FL	FR
LT-A	500	FK2/FK3/FK4 Vinson 4WD Auto	2002 - 2007	FL	FR
LT-F	500	FK3/FK4/FK5/FK6/FK7 Vinson	2003 - 2007	FL	FR

SYM

	600	Quadraider	2006 - 2007	FL	FR

TAISHAN

	50	Panther Quad	2003 - 2004	FL	FR
XT	50		2003 - 2004	FL	
XT	125	Sport	2004 - 2005	FL	

YAMAHA

YFS	200	R/S/T/V Blaster	2003 - 2006	FL	FR
YFM	250	BT/BV Bruin	2005 - 2006	FL	FR
YFM	250	BW/BX/BY Big Bear	2007 - 2010	FL	FR
YFM	250	XN/XP/XR/XS	2001 - 2004	FL	FR
YFM	350	ANS/ANT/ANV Bruin 2x4	2004 - 2006	FL	FR
YFM	350	FAS/FAT/FAV Bruin 4x4	2004 - 2006	FL	FR
YFM	350	FGIW/FGIX/FGIY/FGIZ Grizzly 4WD IRS	2007 - 2010	FL	FR
YFM	350	FWA Grizzly 4WD	2004 - 2014	FL	FR
YFM	350	FXG/FXH/FXJ/FXK/FXL/FXM/FXN/FXPFXR/FXS Wolverine	1995 - 2004	FL	FR
YFM	350	GW/GX/GY/GZ Grizzly 2WD	2008 - 2010	FL	FR
YFM	350	L Big Bear	1999 - 1999	FL	FR
YFM	350	XD/XE/XF/XG/XH/XJ/XK/XL/XM/XN/XP/XR	1992 - 2004	FL	FR
YFM	350	XW/XXW/XX 2WD Wolverine	2006 - 2009	FL	FR
YFZ	350	A/B/D/E/F/G/H/J/K/L/M/N/P/R/S/T/V Banshee	1990 - 2009	FL	FR
YFM	400	AR Kodiak (5VH3/4)	2003 - 2003	FL	FR
YFM	400	FAM/FAN	2000 - 2001	FL	FR
YFM	400	FGW/FGX Grizzly	2007 - 2008	FL	FR
YFM	400	FWT (Big Bear)	2005 - 2005	FL	FR
YFM	450	FAR/FAS	2003 - 2004	FL	FR
YFM	450	FAT/FAHT/FAV (Kodiak)	2005 - 2006	FL	FR
YFM	450	FWA Grizzly IRS	2011 - 2016	FL	FR
YFM	450	FWAD Grizzly EPS (Power Steering)	2011 - 2014	FL	FR
YFM	450	FXV/FXW/FXX/FXY/FXZ Wolverine	2006 - 2010	FL	FR
YFZ	450	B/D	2013 - 2014	FL	FR

EQUIVALENTS OEM

43082 1241	43082 0043	43235-FYBQ-300	45105 166 007	45105 GE3 601	45105 GE3 602	45105 GC4 601
45105 GC4 602/603	45105 GW6 004	45105 GBF 405	45112 GC4 601	45112 GC4 831	800070854	43082 1028
43082 1201	54074-10000	59300 44870	59300 42810	59300 42850	59340 13A00	59340 22A00
59340 42A10	59340 44A00	3GD W0045 00	06455 GBF J01	5LP W0045 00	59100 38870	59100 38880
59101 38810	59101 38820	59101 38850	59101 38860	K4308 21241	06455 KEH 900	06455 GBZ 701
06455 KRM 861	55100 23044 08	PE774896	44203 OSB 000			

PART NUMBER

145

S3 | GP5 | GP6 | GP7

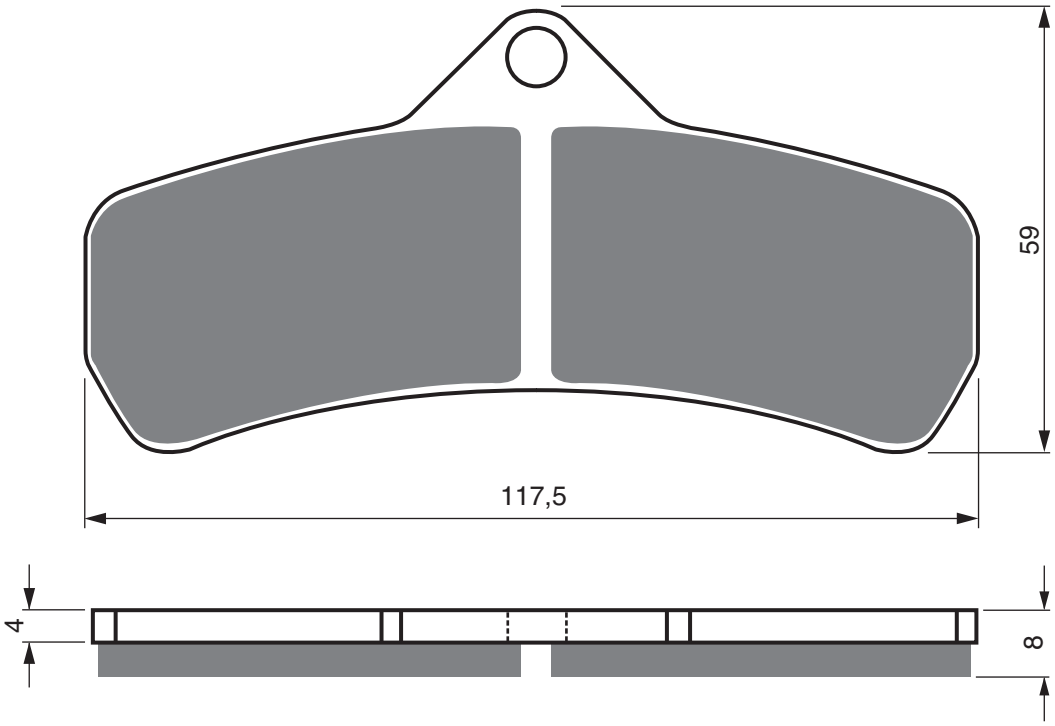

SPIEGLER BREMSTECHNIK

8 Piston light weight calliper FL FR

AD | S3 | S33 RACING

PART NUMBER

146

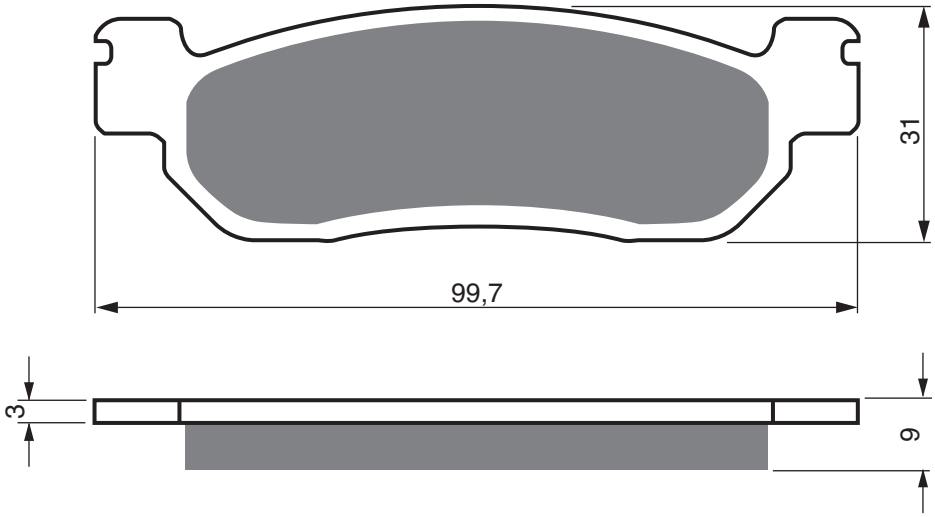

ITALJET				
	125	/150 Jupiter	2002 - 2002	RR
LINHAI				
	125	/150 Monarch T	2006 - 2007	RR
	300	Main Street (Scooter)	2007 - 2008	RR
MBK				
YP	250	Skyliner (250 + ABS)	1998 - 2002	RR
YAMAHA				
RZ	50	(5FC1/2)	2002 - 2002	FL
T	105	E (5ER1/2) Crypton R	1999 - 1999	FL
T	105	SE Crypton (5EA3)	2002 - 2002	FL
V	110	ZE/ZK/ZHE/ZHK/FIZR/FIZR Sport	1996 - 1996	FL
AT	115	Neo (Brasil) (2B81/2/3))	2005 - 2007	FL
AT	115	Neo CVT/Brasil (15S1)	2008 - 2008	FL
TW	125	(5EK/5RS)	1999 - 2004	FL
XP	125	RA X-Max - IRON Max (ABS)	2016 - 2016	RR
YP	125	R (X-Max - ABS) (39D2/Nissin F/Caliper)	2011 - 2017	RR
YP	125	X-Max Business (ABS)	2011 - 2011	RR
DT	175		2000 - 2000	FL
TW	200	(2JL/4CS1-6/5LB1/2)	1991 - 2002	FL
ST	225	Bronco (5BT)	1997 - 1997	FL
TW	225	E (5VC1/2)	2002 - 2003	FL
XT	225	Serow	2005 - 2005	FL
XT	225	WE (4JG5/6) Serrow	1997 - 1998	FL
VP	250	W X-City	2007 - 2016	RR
XG	250	Tricker (5XT1)	2004 - 2006	FL
XP	250	R X-MAC (ICO) (Brembo Front Caliper / Non ABS)	2005 - 2009	RR
XP	250	R X-Max (37P) (Nissan Front Caliper/Non ABS)	2010 - 2013	RR
XP	250	RA X-Max - Iron Max (ABS)	2016 - 2016	RR
XT	250	Serrow (3C51/52)	2005 - 2008	FL
YP	250	DX/A Majesty	1998 - 2003	RR
YP	250	R (X-Max)	2005 - 2009	RR
YP	250	R X-Max (ABS)	2011 - 2016	RR
YP	250	R X-Max Sport	2011 - 2012	RR
XP	400	RA X-Max - Iron Max (ABS)	2016 - 2016	RR
YP	400	R X-Max (Non ABS)	2013 - 2016	RR
YP	400	RA X-Max (ABS)	2013 - 2018	RR
YZF	600	"R6"	1999 - 2002	RR

EQUIVALENTS OEM

4730480	4JG W0045 00	4US W0045 00	3C5 W0045 00	3C5 25805 00	3 YR W0045 00	37P W0046 00
5CG W0046 00	5CG W0046 20	5EK W0045 10	5EB W0046 00	5GM W0046 00	5PW W0046 50	5LB W0045 00
5XT W0045 00	1SD F591100					

PART NUMBER

147

AD	S3	S33 RACING

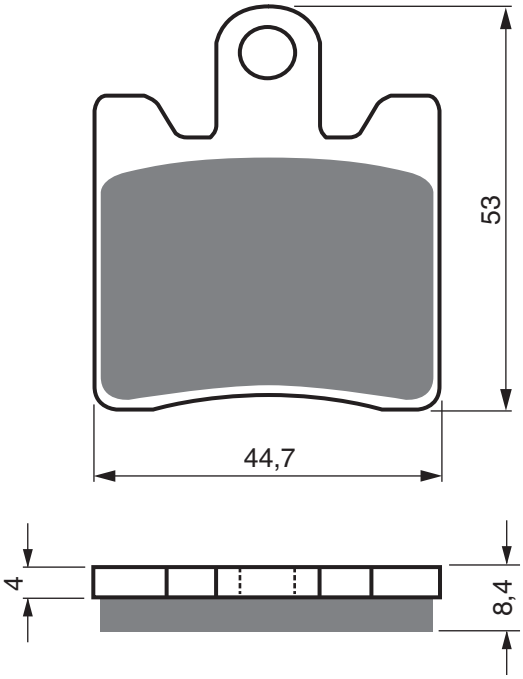

KAWASAKI

SC	250	A1 (Epsilon 250)	2002 - 2003	FL

SUZUKI

AN	250	W/X/Y Burgman/Skywave	1998 - 2000	FL
AN	250	K1/K2 Burgman/Skywave	2001 - 2002	FL
AN	250	K3-K6 Burgman (CJ43A)	2003 - 2006	FL
AN	400	X/Y Burgman/Skywave	1999 - 2000	FL
AN	400	K1-K2 Burgman/Skywave	2001 - 2002	FL
AN	400	K3-K6 Burgman/Skywave	2003 - 2006	FL

SYM

GT	500		2004 - 2004	FL
GT	500		2007 - 2007	FL FR

EQUIVALENTS OEM

59300 14870	59300 14880	43082 S002	59301 14810	59301 14820	45105 SZ1 0100

AD	S3	S33 RACING

PART NUMBER

148

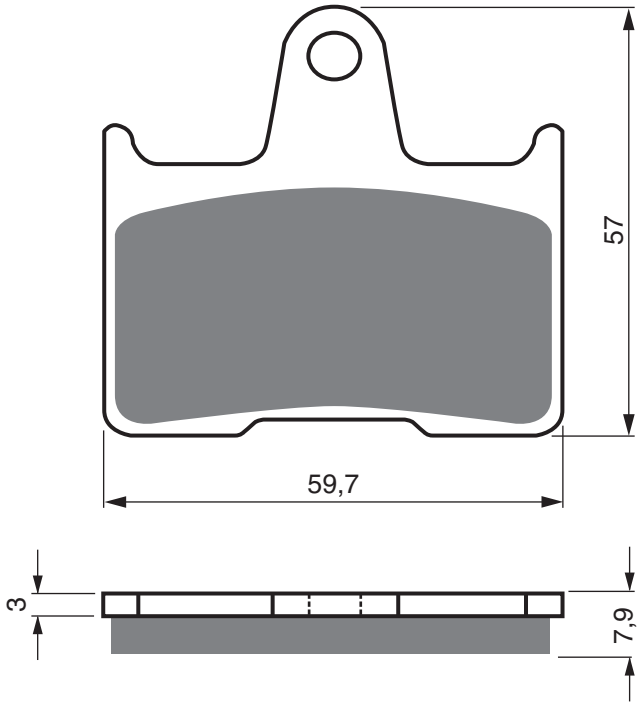

HARLEY DAVIDSON

XL	883	L Super Low (Cast Wheels)	2014 - 2020	RR
XL	883	N Iron	2016 - 2020	RR
XL	883	N Iron (Cast wheels)	2014 - 2015	RR
XL	883	R Roadster (Cast wheels)	2014 - 2015	RR
XL	1 200	C Custom (Spoke Wheels)	2014 - 2020	RR
XL	1 200	C Custom Ltd (Spoke Wheel)	2014 - 2020	RR
XL	1 200	CX Roadster	2016 - 2020	RR
XL	1 200	Forty Eight Anniversary	2018 - 2018	RR
XL	1 200	NS Iron	2018 - 2018	RR
XL	1 200	T Superlow	2014 - 2020	RR
XL	1 200	V Seventy-Two	2014 - 2016	RR
XL	1 200	X Forty Eight	2014 - 2018	RR
XL	1 200	XS Forty Eight Special	2018 - 2018	RR

HONDA

CB	400	SFX/SFY/SF1/SF2/SF3 Superfour (NC39 - Superfour/Superfour Bol D'Or)	1999 - 2003	RR
VT	750	C Shadow Aero (ABS)	2018 - 2020	RR
VT	750	CS2A/C25B Shadow (3 piston caliper/rear disc/17"front wheel)	2010 - 2012	RR
CB	1 300	F1 (SC40)	2001 - 2001	RR
CB	1 300	FW/FX/FY (SC40)	1998 - 2000	RR
CB	1 300	X-4 DCV/DCW/DCX/DCY (SC38)	1997 - 2000	RR

KAWASAKI

ZX-7RR	750	(ZX 750 N1/N2)	1996 - 1999	RR
GTR	1 400	(ZG 1400 A8F/A9F/CAF/CBF/CCF/CDF/CEF/EEF/EGF/EHF/EHJ)	2008 - 2020	RR
ZZR	1 400	(ZX 1400 A6F/A7F)	2006 - 2007	RR
ZZR	1 400	ABS (ZX 1400 B6F/B7F)	2006 - 2007	RR
ZZR	1 400	ABS (ZX 1400 D8F/DAF/DBF/FCF/FDF/FEF/FFF/HGF/HHF/HJF)	2008 - 2020	RR
ZZR	1 400	Performance Sport (ZX 1400 JGF/JHF/JJF)	2014 - 2020	RR
ZZR	1 400	Special Edition (ZX 1400 FDFA/FEFA/FEFB/FFFA)	2012 - 2016	RR

MZ

	1 000	(MUZ)SN	2005 - 2007	RR
	1 000	S	2003 - 2007	RR
	1 000	SF	2005 - 2007	RR
	1 000	SFX	2007 - 2007	RR
	1 000	ST	2007 - 2007	RR

SUZUKI

GSX-R	600	K4/K5	2004 - 2005	RR
GSF	650	K5/K6 Naked Bandit Non ABS	2005 - 2006	RR
GSF	650	SK5/SK6 Faired Bandit Non ABS	2005 - 2006	RR
GSX-R	750	K4/K5	2004 - 2005	RR
GSX-R	1 000	K1/K2	2001 - 2002	RR
GSX-R	1 000	K3	2003 - 2003	RR
GSX-R	1 000	K4	2004 - 2004	RR
GSX-R	1 000	K5/K6	2005 - 2006	RR
GSX	1 400	K1/K2/K3/K4/K5/K6/K7/FE	2001 - 2007	RR

EQUIVALENTS OEM

43082 1182	43082 0055	06435 MAZ 006	69100 40820	69100 40840	69100 18810	69100 29810
06435 MCE 006	9024030000					

PART NUMBER

149

AD | S3

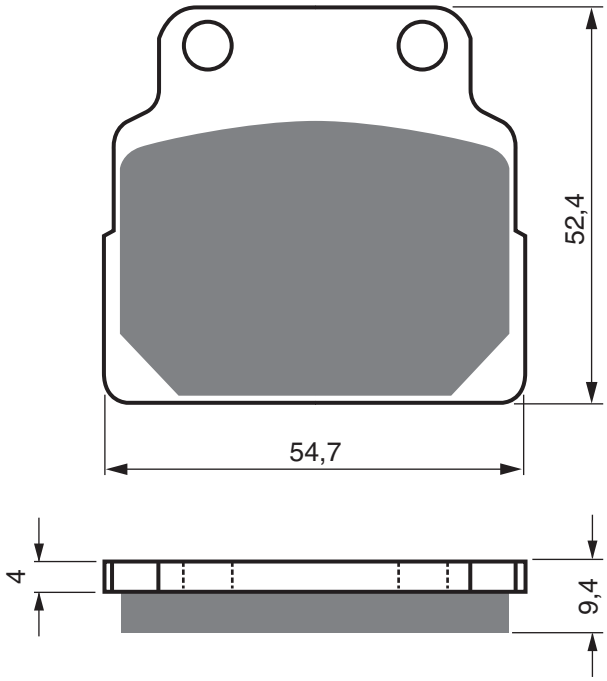

HONDA

CB	450	DX-X	1989 - 1992	FL	FR	RR

MOTO-GUZZI

V65	650	GT	1990 - 1990	RR	

EQUIVALENTS OEM

43105 KK9 691

AD | S3

PART NUMBER

150

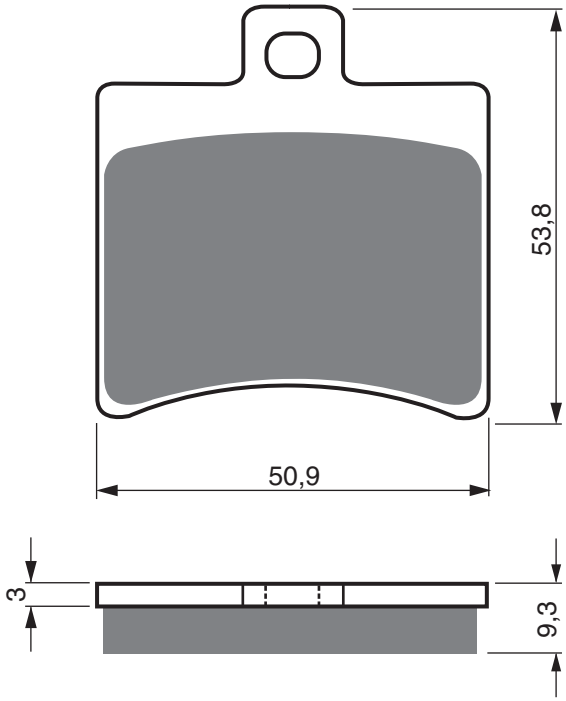

APRILIA

	50	Scarabeo Ditech (2T) (SCA00)	2002 - 2006	RR
SR	50	Ditech (LC)(RLD100)	2002 - 2003	RR
SR	50	H20 (Ditech) (RLA1/RLB1)	2000 - 2003	RR
SR	50	R Factory (LC/2T)(VFB00/VFD00)	2004 - 2018	RR
SR	50	R SBK Alitalia (Replica) (LC)	2010 - 2011	RR
SR	50	Street (LC/2T) (TE00/TEA00)	2003 - 2015	RR
	125	Atlantic	2003 - 2008	RR
	125	Atlantic	2010 - 2010	RR
	125	Scarabeo	2007 - 2010	RR
	125	Scarabeo GT	2004 - 2006	RR
	125	Sport City	2004 - 2008	RR
	125	Sport City Cube	2008 - 2012	RR
RS	125	(Radial Caliper model) 2T	2006 - 2012	RR
	150	Scarabeo	1999 - 2002	RR
	200	Atlantic	2003 - 2005	RR
	200	Scarabeo	1999 - 2002	RR
	200	Scarabeo	2003 - 2003	RR
	200	Scarabeo	2007 - 2009	RR
	200	Sport City	2004 - 2008	RR
	200	Sport City Cube	2008 - 2009	RR
	250	Atlantic	2003 - 2005	RR
	250	Atlantic ie	2006 - 2008	RR
	250	Leonardo ST/SP	2000 - 2004	RR
	250	Scarabeo	2006 - 2006	RR
	250	Scarabeo ie	2007 - 2010	RR
	250	Sport City Cube	2008 - 2009	RR
	250	Sport City ie	2006 - 2008	RR
	300	Atlantic	2010 - 2011	RR
	300	Leonardo (Grimeca cal.)	2005 - 2006	RR
	300	Scarabeo S	2009 - 2010	RR
	300	Sport City Cube	2008 - 2012	RR
	300	Sport Cube Blackline	2011 - 2011	RR
	400	Atlantic Sprint	2005 - 2008	RR
	400	Scarabeo ie	2007 - 2008	RR
	500	Atlantic	2002 - 2004	RR
	500	Atlantic Sprint	2005 - 2008	RR
	500	Scarabeo ABS	2003 - 2006	RR
	500	Scarabeo ie	2007 - 2009	RR
	500	Scarabeo Light	2006 - 2006	RR

BENELLI

	125	Velvet (13" Front wheel/Touring)	2008 - 2012	RR
	150	Velvet (13" Front wheel/Touring)	2008 - 2012	RR
	250	Velvet	1999 - 2012	RR
BX	250	Motard	2016 - 2018	RR
BN	251		2014 - 2018	RR
BN	302		2015 - 2016	RR
	400	Velvet	2003 - 2004	RR

BETA

	125	Eikon	2000 - 2006	RR
	150	Eikon	2000 - 2006	RR

CPI

GTR	50	(1 Pin Pad Fixing Front Caliper)	2003 - 2013	RR
GTR	125	(1 Pin Pad Fixing Front Caliper)	2003 - 2013	RR
GTR	150	(1 Pin Pad Fixing Front Caliper)	2003 - 2013	RR

DERBI

	125	Boulevard S	2007 - 2007	RR
	125	Rambla	2008 - 2012	RR
	250	i Rambla	2008 - 2009	RR
	300	i Rambla	2010 - 2012	RR

GENERIC

	125	Code S (4T)	2012 - 2016	RR
	125	Code X (4T)	2012 - 2016	RR
	125	Worx (4T)	2012 - 2016	RR
GRS	125		2017 - 2020	RR

PART NUMBER

150

AD | S3

TR	125	SM (4T)	2012 - 2016	RR
TR	125	SM (4T)	2017 - 2018	RR
TR	125	X	2017 - 2018	RR
TW	125	SM	2017 - 2018	RR
	150	Code S (4T)	2012 - 2016	RR
	150	Code X (4T)	2012 - 2016	RR
	150	Worx (4T)	2012 - 2016	RR
	200	Code S (4T)	2012 - 2016	RR
	200	Code X (4T)	2012 - 2016	RR

HP POWER

	50	Iron (2T)	2010 - 2011	RR

HYOSUNG

GD	250	i Naked	2013 - 2015	RR
GD	250	N	2013 - 2014	RR
GT	250	i R (EFi)	2014 - 2015	RR
GT	650	i R	2014 - 2015	RR

ITALJET

	400	cc Marco Polo Scooter	2007 - 2009	RR

KEEWAY

	125	Cityblade	2013 - 2014	RR
	125	Cityblade EURO4	2016 - 2019	RR
RKV	125		2010 - 2014	RR
TX	125	SM (17"FW)	2013 - 2015	RR
TX	125	TXM	2016 - 2019	RR
RKV	150		2013 - 2014	RR
RKX	150		2013 - 2014	RR
KXM	200		2014 - 2014	RR
KXV	200		2014 - 2014	RR
RKV	200	S	2014 - 2014	RR
RKV	200	S Factory	2014 - 2014	RR
RKX	200		2013 - 2014	RR
TX	200	(19" F/wheel)	2013 - 2014	RR

MALAGUTI

	125	-3 Madison	2006 - 2009	RR
	125	/200 Phantom MAX	2004 - 2008	RR
	125	Madison	1999 - 2002	RR
	125	Madison R	2003 - 2007	RR
F18	125	Warrior	2000 - 2003	RR
	150	Madison	1999 - 2003	RR
F18	150	Warrior	2000 - 2003	RR
	180	Madison	2002 - 2003	RR
	200	Madison S	2004 - 2004	RR
	250	Madison	2004 - 2007	RR
	250	Madison ie3	2006 - 2010	RR
	250	Madison S	1999 - 2003	RR
	250	Password	2005 - 2011	RR
	250	Phantom Max	2004 - 2008	RR
	300	Scarabeo S	2009 - 2010	RR
	400	Madison K	2002 - 2006	RR
	500	Spidermax GT	2004 - 2010	RR
	500	Spidermax RS	2004 - 2011	RR

PEUGEOT

	125	i Citystar	2011 - 2014	RR

SCARABEO

	125	ie	2010 - 2015	RR
	125	Net	2010 - 2011	RR
	200	ie	2010 - 2015	RR
	200	Net	2010 - 2011	RR
	300	S	2009 - 2011	RR
	500	ie	2010 - 2011	RR

TGB

	125	Bellavita i (4T)	2012 - 2014	RR
	300	Bellavita i (4T)	2012 - 2014	RR

EQUIVALENTS OEM

811 3869	119 491 00	2525371000	R44440161A0	11948600	8213506	8133539
8133946	8213577	8133726	8133946	666397	R050372080000	55120 J41 000
B23 452800000	69301 H08100					

AD | S3

PART NUMBER

151

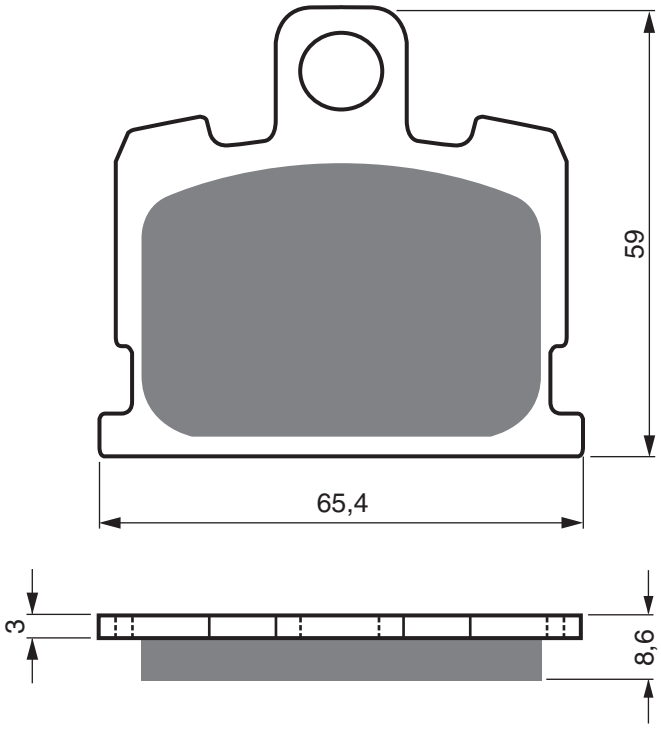

YAMAHA

RD	50	MX/RD 50	1981 - 1987	FL	
RD	80	(Air Cooled)	1982 - 1982	FL	
RX	80	SE (12N/C607)	1982 - 1982	FL	
RD	250		1980 - 1983	FL	
RZ	250	(4L3)		FL	
RD	350	LX	1981 - 1982	FL	FR
XJ	550		1981 - 1984	FL	FR
XJ	550	H/J/K Maxim	1981 - 1983	FL	
XJ	550	RH/RJ/RK Seca	1981 - 1983	FL	
XJ	750		1982 - 1984	FL	FR
XJ	750	RF/RJ/RK Seca	1981 - 1983	FL	FR
XS	1 100	S	1981 - 1981	FL	FR

EQUIVALENTS OEM

23W W0045 01	23W W0045 10	4L3 W0045 00	4L3 W0045 10	4W1 W0045 00	4W1 W0045 10	4W1 W0045 20
4W1 W0045 30						

PART NUMBER

152

AD	S3	S33 RACING	GP5	GP6	GP7

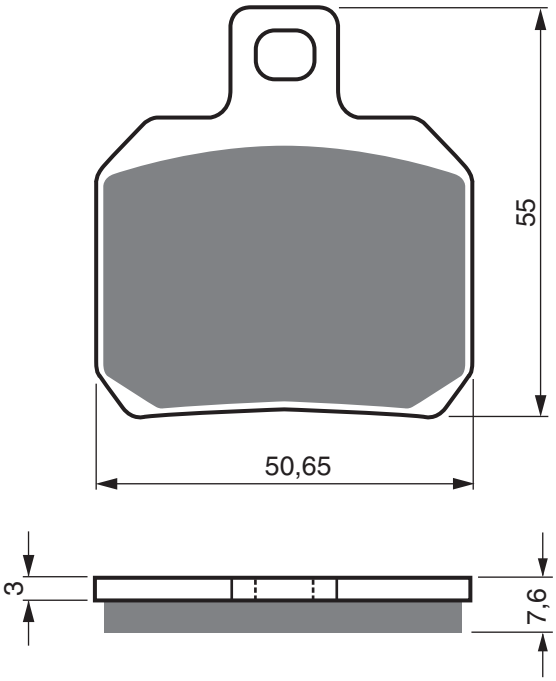

ADIVA SCOOTERS

AD2	300	(2 Wheel Type)	2014 - 2015	FL	FR
AD	400		2009 - 2011	FL	RR

APRILIA

RS	50	(Radial Caliper - 6 bolt fixing Front & Rear)	2006 - 2011	FL	
	1 000	Tuono R (Radial Caliper / 2 pad type)	2002 - 2010	RR	
	1 000	Tuono R (Radial Caliper / 4 Pad Type)	2002 - 2005	RR	
	1 000	Tuono R Factory (Radial Caliper / 4 pad type)	2006 - 2010	RR	
	1 000	Tuono V4R	2011 - 2012	RR	
	1 000	Tuono V4R APRC ABS	2013 - 2014	RR	
	1 000	Tuono V4R-APRC	2011 - 2013	RR	
ETV	1 000	Caponord (ABS - Bush fixing)	2004 - 2007	RR	
ETV	1 000	Caponord (Non ABS - Bolt Fixing)	2001 - 2003	RR	
ETV	1 000	Caponord Rally Raid (Non ABS - Bush Fixing)	2003 - 2003	RR	
RSV	1 000	Mille	1998 - 2000	RR	
RSV	1 000	Mille	2001 - 2002	RR	
RSV	1 000	Mille (Radial Caliper)	2003 - 2003	RR	
RSV	1 000	Mille R	2000 - 2000	RR	
RSV	1 000	Mille R	2001 - 2002	RR	
RSV	1 000	Mille R (Radial Caliper)	2003 - 2003	RR	
RSV	1 000	Mille SP	1999 - 2000	RR	
RSV	1 000	R	2004 - 2008	RR	
RSV	1 000	R Factory	2004 - 2008	RR	
RSV	1 000	R Factory (Radial Caliper / 4pad)	2004 - 2008	RR	
RSV	1 000	R Racing (Radial Caliper/4pad)	2004 - 2008	RR	
RSV	1 000	R Tuono	2002 - 2006	RR	
RSV	1 000	R Tuono (Radial Caliper / 2 pin pad fixing)	2007 - 2008	RR	
RSV4	1 000	Factory	2009 - 2010	RR	
RSV4	1 000	Factory APRC	2011 - 2013	RR	
RSV4	1 000	Factory APRC ABS	2013 - 2014	RR	
RSV4	1 000	R	2010 - 2010	RR	
RSV4	1 000	R APRC	2011 - 2013	RR	
RSV4	1 000	R APRC ABS	2013 - 2014	RR	
RSV4	1 000	RF	2015 - 2018	RR	
RSV4	1 000	RR	2015 - 2018	RR	
SL	1 000	Falco	2000 - 2004	RR	
	1 100	Tuono Factory V4	2015 - 2016	RR	
	1 100	Tuono Factory V4	2017 - 2018	RR	
	1 100	Tuono RR	2019 - 2020	RR	
	1 100	Tuono RR V4	2015 - 2021	RR	
	1 100	Tuono V4 Factory	2019 - 2020	RR	
RSV4	1 100	Factory	2019 - 2020	RR	
RSV4	1 100	RR	2019 - 2020	RR	

AUSA QUADS

M	50	Task (Side x Side)	FL	FR	RR

AD | S3 | S33 RACING | GP5 | GP6 | GP7

PART NUMBER

152

BENELLI

TRE	502	K	2016 - 2016	RR		
BN	600	GT	2014 - 2015	RR		
BN	600	i	2014 - 2015	RR		
BN	600	R	2014 - 2016	RR		
BN	600	S	2014 - 2015	RR		
2-UE	750		2009 - 2010	RR		
	800	Leonciono	2020 - 2021	RR		
	800	Trail	2020 - 2021	RR		
	899	Cafe Racer	2010 - 2012	RR		
	899	Century Racer	2011 - 2012	RR		
	899	Tornado LE/Tre Novecento	2003 - 2005	RR		
TNT	899	S Tornado Naked Tre	2007 - 2011	RR		
TNT	899	Tornado Naked Tre	2007 - 2016	RR		
TRE-K	899		2007 - 2016	RR		
	900	Tornado	2002 - 2002	RR		
TNT	1 130	Cafe Racer	2005 - 2005	RR		
TNT	1 130	Cafe Racer	2006 - 2012	RR		
TNT	1 130	Century Racer	2011 - 2012	RR		
TNT	1 130	Sport/Sport Evo	2004 - 2009	RR		
TNT	1 130	Titanium	2005 - 2005	RR		
TNT	1 130	Tornado Naked Tre	2006 - 2007	RR		
TNT	1 130	Tornado Naked Tre R	2013 - 2016	RR		
TNT	1 130	Tornado Naked Tre TR160	2009 - 2012	RR		
TRE	1 130	K	2006 - 2017	RR		
TRE	1 130	K Amazonas	2007 - 2015	RR		
TRE	1 130	Tornado (Radial Caliper)	2006 - 2010	RR		

BIMOTA

		Delirio	2006 - 2006	RR		
DB5		(All Models)	2006 - 2007	RR		
DB5R			2006 - 2006	RR		
DB6	992	Delirio (Ducati engine)	2007 - 2007	RR		
DB5	1 078	Desiderio	2012 - 2014	RR		
DB7	1 098		2008 - 2008	RR		
DB6	1 100		2008 - 2008	RR		
DB6R	1 100	Delirio	2008 - 2008	RR		
DB8	1 198		2010 - 2014	RR		
DB9	1 198	Brivido S (with BCA 6 piston caliper)	2012 - 2014	RR		
DB11	1 200	VLX	2012 - 2014	RR		
DB12B	1 200	Tourist	2012 - 2013	RR		
DB9	1 200	Brivido	2012 - 2014	RR		

BOMBARDIER

		Traxter (4x4)	1999 - 2001	FL	FR	RR

BRAMMO

		Empulse R	2012 - 2013	RR		
		Enertia	2012 - 2013	RR		

BREMBO RACING CALIPERS

		120A44110 P2/34 Supersport Rear Caliper		FL		
		20 6950 51 - 2 Piston P2/32 Rearv Caliper (Single Pad Fixing Pin / With Wire Clip)		RR		
		20 6951 12/50/63 - P2/34 Rear Caliper (Single pad fixing pin /with wire clip)		RR		

CAGIVA

	650	Raptor	2000 - 2007	RR		
	650	V-Raptor	2000 - 2007	RR		
	1 000	Raptor	2000 - 2005	RR		
	1 000	V-Raptor	2000 - 2005	RR		

CF MOTO

CF	125	T-22/22A Glory	2010 - 2011	RR		
CF	150	T-6/6A Glory	2010 - 2011	RR		
CF	250	T - 6A Jetmax (Scooter)	2012 - 2015	RR		

CPI

GTR	50	(1 Pin Pad Fixing Front Caliper)	2003 - 2013	FL		
	125	X-Large	2002 - 2003	FL	FR	RR
GTR	125	(1 Pin Pad Fixing Front Caliper)	2003 - 2013	FL		
	150	X-Large	2002 - 2003	FL	FR	RR
GTR	150	(1 Pin Pad Fixing Front Caliper)	2003 - 2013	FL		
	200	X-Large	2002 - 2003	FL	FR	RR

DERBI

DRD	50	Senda Evo SM (Cast wheels)	2008 - 2011	FL		
DRD	50	Senda Pro R Radial Caliper (260mm disc)	2005 - 2013	FL		
DRD	50	Senda Pro SM Radial Caliper (300mm disc)	2005 - 2014	FL		
DRD	50	Senda X-Treme SM (Cast Wheel/260mm F disc/17" Front wheel)	2011 - 2014	FL		
GP1	50	Euro 2 Chain Driven / Radial Cal. / 5-Bolt Fixing	2005 - 2005	FL		
GP1	50	Race Chain Driven / Rad. Cal / 5-Bolt Fixing	2005 - 2007	FL		
GPR	50	(40mm Forks / 180mm R/Disc / Rad. Caliper)	2004 - 2007	FL		
GPR	50	Nude (Radial Caliper/180mm R/Disc)	2004 - 2009	FL		
GPR	50	Racing (40mm Forks/180mm R/disc/Radial Caliper)	2008 - 2010	FL		
GPR	80	Cup (Radial Caliper)	2004 - 2005	FL		
	125	Mulhacen Cafe (Cast wheel/Radial Caliper)	2008 - 2010	FL		
DRD	125	Senda R	2010 - 2012	FL		
DRD	125	Senda SM	2010 - 2014	FL		
GP1	125	Scooter (Full height seat/5bolt fixing front disc)	2006 - 2006	FL	RR	
GP1	250		2005 - 2005	FL		
GP1	250	Scooter	2006 - 2007	FL	RR	
	659	Mulhacen	2006 - 2008	RR		

DUCATI

	696	Monster	2008 - 2014	RR		
	696	Monster + (inc ABS Models)	2009 - 2012	RR		
	696	Monster 20th Aniversary Model	2013 - 2013	RR		
	749	(Monoposto/Biposto)	2003 - 2006	RR		
	749	Dark (Monoposto/Biposto)	2004 - 2006	RR		
	749	R (Radial Caliper)	2004 - 2006	RR		
	749	S (Monoposto/Biposto)	2003 - 2006	RR		
	750	Sport	2001 - 2002	RR		
	750	Supersport	1999 - 1999	RR		
	750	Supersport IE	2000 - 2002	RR		
	796	Hypermotard	2010 - 2013	RR		
	796	Monster (ABS models)	2010 - 2014	RR		
	796	Monster (Non ABS Models)	2010 - 2013	RR		
	796	Monster 20th Aniversary Model (ABS & Non ABS)	2013 - 2013	RR		
	800	Supersport	2003 - 2005	RR		
	821	Hypermotard	2013 - 2016	RR		
	821	Hypermotard SP	2013 - 2016	RR		
	821	Hyperstrada	2013 - 2016	RR		
	821	Monster	2015 - 2020	RR		
	821	Monster Dark/Monster Stripe	2015 - 2020	RR		
	848	(Radial 2 Pad Caliper)	2008 - 2010	RR		
	848	Evo (Monobloc front calipers)	2010 - 2013	RR		
	848	Evo Corse SE	2012 - 2013	RR		
	848	Evo Dark	2012 - 2012	RR		
	848	Streetfighter	2011 - 2015	RR		
	899	Panigale	2014 - 2015	RR		
	900	MH Evoluzione	2000 - 2001	RR		
	900	Sport	2002 - 2002	RR		
	900	Supersport	1998 - 1999	RR		
	900	Supersport IE	2000 - 2001	RR		
ST4	916		1999 - 2002	RR		
	936	Supersport	2017 - 2021	RR		
	936	Supersport S	2017 - 2021	RR		
	939	Hypermotard	2016 - 2020	RR		
	939	Hypermotard SP	2016 - 2020	RR		
	939	Hyperstrada	2016 - 2017	RR		
ST2	944		1997 - 1999	RR		
ST2	944		2000 - 2003	RR		

PART NUMBER

152

AD | S3 | S33 RACING | GP5 | GP6 | GP7

	955	Panigale V2	2019 - 2020	RR
	955	Panigale V2 Bomber	2019 - 2020	RR
	959	Panigale (ABS)	2016 - 2019	RR
	959	Panigale Corse (ABS)	2018 - 2019	RR
	985	Panigale (ABS)	2016 - 2019	RR
RR	989	Desmosedici (D16RR)	2008 - 2008	RR
ST3	992	(Non ABS)	2004 - 2007	RR
ST3S	992	(ABS Model)	2006 - 2007	RR
ST4S	996	cc (ABS)	2003 - 2005	RR
ST4S	996	cc (Non ABS Model)	2001 - 2005	RR
	999	(Std Mount Caliper)	2003 - 2006	RR
	999	R (Radial mount caliper)	2003 - 2006	RR
	999	R Fila (Radial Mount Caliper)	2003 - 2003	RR
	999	R Xerox	2006 - 2006	RR
	999	S (Radial Caliper) (Monoposto/Biposto)	2005 - 2006	RR
	999	S (Std Mount Caliper) (Monoposto/Biposto)	2003 - 2004	RR
	1 000	Multistrada DS (992cc)	2003 - 2006	RR
	1 000	Multistrada S DS (992cc)	2005 - 2006	RR
	1 000	Supersport DS (992cc)	2003 - 2006	RR
	1 098		2007 - 2008	RR
	1 098	R	2008 - 2009	RR
	1 098	S	2007 - 2008	RR
	1 098	S Tricolore	2007 - 2007	RR
	1 100	EVO Hypermotard	2010 - 2012	RR
	1 100	EVO SP Hypermotard	2010 - 2012	RR
	1 100	Hypermotard	2007 - 2009	RR
	1 100	Hypermotard S	2008 - 2009	RR
	1 100	Monster (ABS & Non ABS)	2009 - 2010	RR
	1 100	Monster Diesel	2013 - 2013	RR
	1 100	Monster EVO	2011 - 2013	RR
	1 100	Monster EVO - 20th Anniversary Model	2013 - 2013	RR
	1 100	Multistrada (1078cc)	2007 - 2009	RR
	1 100	Panigale V4 (1103cc)	2018 - 2021	RR
	1 100	Panigale V4 S (1103cc)	2018 - 2021	RR
	1 100	Panigale V4 SP (1103cc)	2021 - 2021	RR
	1 100	S Monster (ABS & Non ABS)	2009 - 2010	RR
	1 100	S Multistrada (1078cc)	2007 - 2009	RR
	1 100	Streetfighter (1099cc)	2009 - 2011	RR
	1 100	Streetfighter S (1099cc)	2009 - 2013	RR
	1 103	Streetfighter V4	2019 - 2021	RR
	1 103	Streetfighter V4 S	2019 - 2021	RR
	1 198		2009 - 2011	RR
	1 198	R Corse	2010 - 2010	RR
	1 198	S	2009 - 2010	RR
	1 198	S Corse	2009 - 2010	RR
	1 198	SP	2011 - 2011	RR
	1 199	Panigale	2012 - 2013	RR
	1 199	Panigale ABS	2012 - 2015	RR
	1 199	Panigale R	2013 - 2016	RR
	1 199	Panigale S ABS	2012 - 2015	RR
	1 199	Panigale S Tricolore	2012 - 2013	RR
	1 199	Superleggera	2014 - 2014	RR
	1 200	Multistrada S Granturismo	2013 - 2014	RR
	1 200	Monster	2014 - 2020	RR
	1 200	Monster R	2016 - 2018	RR
	1 200	Monster S	2014 - 2020	RR
	1 200	Monster Stripe	2015 - 2019	RR
	1 200	Multistrada ABS	2010 - 2014	RR
	1 200	Multistrada DVT	2015 - 2017	RR
	1 200	Multistrada S Pikes Peak	2011 - 2014	RR
	1 200	Multistrada Standard	2010 - 2011	RR
	1 200	S Multistrada D Air DVT	2015 - 2017	RR
	1 200	S Multistrada DVT	2015 - 2017	RR
	1 200	S Multistrada Sport Edition	2010 - 2012	RR
	1 200	S Multistrada Touring Edition	2010 - 2014	RR
	1 299	Panigale	2015 - 2018	RR
	1 299	Panigale R	2015 - 2017	RR
	1 299	Panigale R Final Edition	2018 - 2018	RR
	1 299	Panigale S	2015 - 2018	RR
	1 299	Panigale V4 Corse/Speciale	2018 - 2020	RR
	1 299	Panigale V4 R	2019 - 2020	RR
	1 299	Superleggera	2017 - 2017	RR
ENERGICA ELECTRIC				
		Electric EGO	2020 - 2021	RR
		Electric EVA	2020 - 2021	RR
		Electric EVA Esse Esse 9	2020 - 2021	RR
		Electric EVA Ribelle	2021 - 2021	RR
		Electric EVA Ribelle RS	2021 - 2021	RR
GENERIC				
GRS	600		2013 - 2014	RR
GILERA				
	500	Nexus	2003 - 2012	RR
GOGORO				
		Smart Scooter (Electric)	2015 - 2017	FL
HARLEY DAVIDSON				
		Livewire (Electric)	2018 - 2020	RR
HONDA				
RC213	1 000	V-S	2015 - 2017	RR
HOREX				
VR6	1 200	Classic	2013 - 2014	RR
VR6	1 200	Roadster	2011 - 2014	RR
INDIAN				
FTR	1 200		2018 - 2020	RR
FTR	1 200	Rally	2020 - 2020	RR
FTR	1 200	S	2019 - 2020	RR
FTR	1 200	S Race Replica	2019 - 2020	RR
KAWASAKI				
H2	1 000	Ninja (ZX 1000 NFF/NGF)	2015 - 2016	RR
H2	1 000	Ninja (ZX1000 XHF/XJF)	2017 - 2020	RR
H2	1 000	Ninja Carbon (ZX1000 XHFA/XJFA)	2017 - 2020	RR
H2	1 000	R Ninja (ZX 1000 PFF/PGF)	2015 - 2016	RR
H2	1 000	R Ninja (ZX1000 YHF/YJF)	2017 - 2020	RR
Z	1 000	H2	2020 - 2021	RR
KEEWAY				
	125	Silverblade	2007 - 2007	RR
	150	Silverblade	2007 - 2007	RR
	250	Silverblade	2007 - 2007	RR
KTM				
RC8	1 190		2008 - 2011	RR
RC8	1 190	R	2009 - 2015	RR
RC8	1 190	Track (1190cc)	2009 - 2015	RR
	1 290	Super Duke GT	2016 - 2020	RR
	1 290	Super Duke R	2014 - 2020	RR
	1 290	Super Duke R SE	2016 - 2018	RR
LAVERDA				
TTS	800		1999 - 1999	RR
SFC	1 000		2003 - 2004	RR
MALAGUTI				
	50	Drakon S	2006 - 2006	FL
NKD	50	Drakon	2005 - 2009	FL
MBK				
VP	125	Cityliner	2008 - 2010	RR
XP	125	Skycruiser	2006 - 2006	RR
XQ	125	Thunder	2001 - 2003	RR
YP	125	D Skyliner	1998 - 2010	RR

AD | S3 | S33 RACING | GP5 | GP6 | GP7

PART NUMBER

152

YP	125	Skycruiser	2006 - 2010	RR	
XQ	150	Thunder	2001 - 2003	RR	
	180	Skyliner	2004 - 2004	RR	
MONDIAL					
EVO			2004 - 2004	RR	
	1 000	Piega	2003 - 2004	RR	
MOTO-GUZZI					
V	740	ie Breva	2003 - 2003	RR	
	750	Nevada	2002 - 2011	RR	
	750	Nevada Classic ie (Spoke wheels)	2004 - 2015	RR	
	750	Nevada Club (From LK112434-)	2000 - 2001	RR	
V	750	ie Breva (3 spoke cast wheels)	2003 - 2007	RR	
V7	750	Cafe Classic	2009 - 2012	RR	
V7	750	Classic	2008 - 2012	RR	
V7	750	Clubman Racer	2010 - 2011	RR	
MGS-01	1 000	Corsa	2004 - 2007	RR	
	1 100	Fionda	2005 - 2005	RR	
V	1 100	Breva	2004 - 2004	RR	
MOTO-MORINI					
MM3	1 187		2007 - 2007	RR	
	1 200	Corsaro	2005 - 2010	RR	
	1 200	Corsaro Avio	2008 - 2009	RR	
	1 200	Corsaro Veloce	2007 - 2008	RR	
	1 200	Rebello Giubileo	2012 - 2013	RR	
	1 200	Scrambler	2008 - 2009	RR	
	1 200	Sport	2008 - 2010	RR	
9 1/2	1 200		2006 - 2010	RR	
MOTUS					
MST			2014 - 2018	RR	
MST-01			2012 - 2013	RR	
MSTR			2014 - 2018	RR	
MTSR-01			2012 - 2013	RR	
MV AGUSTA					
	675	Brutale	2012 - 2017	RR	
F3	675		2012 - 2020	RR	
F3	675	RC	2015 - 2018	RR	
F3	675	Serie Oro	2012 - 2013	RR	
	800	Brutale	2012 - 2018	RR	
	800	Brutale Dragster	2014 - 2015	RR	
	800	Brutale Rosso	2019 - 2020	RR	
	800	Brutale RR	2019 - 2020	RR	
	800	Brutale RR SCS	2019 - 2020	RR	
	800	Dragster RC	2017 - 2020	RR	
	800	Dragster Rosso	2019 - 2020	RR	
	800	Dragster RR	2015 - 2020	RR	
	800	Dragster RR SCS	2019 - 2020	RR	
	800	Rivale	2017 - 2018	RR	
	800	Stradale	2015 - 2015	RR	
	800	Turismo Veloce	2014 - 2018	RR	
	800	Turismo Veloce Lusso	2015 - 2020	RR	
	800	Turismo Veloce Lusso SCS	2019 - 2020	RR	
	800	Turismo Veloce RC	2017 - 2018	RR	
	800	Turismo Veloce RC SCS	2019 - 2020	RR	
F3	800		2014 - 2018	RR	
F3	800	Ago	2014 - 2015	RR	
F3	800	RC	2015 - 2020	RR	
NORTON					
	961	Commander SF	2010 - 2015	RR	
	961	Commando Cafe Racer	2010 - 2020	RR	
	961	Commando Dominator SS	2015 - 2020	RR	
	961	Commando SE	2010 - 2011	RR	
	961	Commando SF	2010 - 2015	RR	
	961	Commando Sport	2010 - 2020	RR	
PETRONAS					
FP1			2005 - 2005	RR	
PEUGEOT					
	50	Speedfight 3 RS (AC/2T)	2010 - 2012	RR	
	50	Speedfight 3 (LC/2T)	2009 - 2015	RR	
	50	Speedfight 3 -RS (LC/2T)	2009 - 2012	RR	
	50	Speedfight 3 Darkside (50cc/LC/2T)	2013 - 2015	RR	
	50	Speedfight 3 Furious (LC/2T)	2013 - 2013	RR	
	50	Speedfight 3 Iceblade (50cc/LC/2T)	2013 - 2015	RR	
	50	Speedfight 4 Classic LC (2T/4T)	2015 - 2020	RR	
	50	Speedfight 4 Darkside (50cc/AC/LC/2T/4T)	2015 - 2018	RR	
	50	Speedfight 4 Iceblade (50cc/AC/LC/2T/4T)	2015 - 2018	RR	
	50	Speedfight 4 Pure (50cc/AC/LC/2T/4T)	2015 - 2018	RR	
	50	Speedfight 4 R-Cup (AC/LC/2T)	2018 - 2020	RR	
	125	Django Heritage (4T/190mm Rear Disc)	2014 - 2020	RR	
	125	Speedfight 3 (4T)	2014 - 2015	RR	
	125	Speedfight 3 Darkside (4T)	2014 - 2015	RR	
	125	Speedfight 3 Iceblade (4T)	2014 - 2015	RR	
	125	Speedfight 3 Team (4T)	2014 - 2015	RR	
	150	Django Heritage (4T/196mm Rear Disc)	2014 - 2020	RR	
PIAGGIO VESPA					
	125	X9	2001 - 2002	FL	RR
X8	125	(Brembo Rear Caliper)	2004 - 2005	RR	
X9	125	Evolution	2005 - 2007	RR	
X9	125	Evolution (Brembo Single pin Fixing)	2003 - 2004	FL	RR
X9	180	Amalfi	2000 - 2003	FL	RR
X8	200	(Brembo Rear Caliper)	2002 - 2003	RR	
X9	200		2002 - 2003	FL	RR
X9	200	Evolution	2003 - 2004	FL	RR
X9	250	(Linked brake F&R wheel 14")	2004 - 2004	RR	
X9	250	/SL	2000 - 2004	FL	FR RR
	400	Beverley Tourer ie	2008 - 2009	FL	FR RR
	500	Beverley	2006 - 2006	FL	FR
	500	Beverley B	2002 - 2004	FL	FR RR
	500	Beverley Cruiser ie	2007 - 2011	FL	FR RR
	500	Beverley ie	2012 - 2012	FL	FR RR
X9	500	/500 SL	2000 - 2002	FL	FR RR
X9	500	cc Evolution (Inc. ABS)	2003 - 2006	RR	
X9	500	ie	2007 - 2007	RR	
RIEJU					
	50	Tango (2T)	2007 - 2012	FL	
MRT	50	Pro (Radial/double piston caliper)	2009 - 2020	FL	
MRT	50	Pro Supermotard (Rad.cal./Cast wheel)	2009 - 2020	FL	
RS3 NKD	50		2012 - 2020	FL	
	125	City Line ie	2013 - 2015	RR	
	125	Marathon Pro (Radial /double piston caliper)	2009 - 2020	FL	
	125	Marathon Pro Supermotard (Cast wheel/Rad.cal.)	2009 - 2020	FL	
	125	Tango	2006 - 2020	FL	
	125	Tango Motard (Cast wheel)	2008 - 2010	FL	
	125	Tango Pro	2007 - 2010	FL	
RS3 NKD	125		2012 - 2020	FL	
SMX	125		2007 - 2008	FL	
	200	Marathon Pro SM	2011 - 2015	FL	
	250	Tango	2008 - 2011	FL	
	300	City Line ie	2014 - 2015	RR	
SINNIS					
QM	125	T-8G Ecocity	2007 - 2014	RR	
SUZUKI					
UH	125	K2/K3/K4/K5/K6 Burgman	2002 - 2006	RR	
TOMOS					
SM	125	F	2005 - 2008	FL	

PART NUMBER

152

AD | S3 | S33 RACING | GP5 | GP6 | GP7

TRIUMPH

	765	Street Triple S ABS (Nissin 2 piston front calipers/ Brembo single piston rear caliper)	2018 - 2020	FL	FR

VECTRIX

VX-3		Li+ (3 wheeler model)	2012 - 2013	FL	

VICTORY

		Empulse TT	2016 - 2016	RR	

VOXAN

		Black Magic	2004 - 2008	RR	
		Cafe Racer	2006 - 2008	RR	
		Street Scrambler	2003 - 2005	RR	
		Street Scrambler	2007 - 2008	RR	
VB1-EVO			2003 - 2004	RR	
	1 000	Café Racer	2002 - 2005	RR	
	1 000	Cyclope	2002 - 2002	RR	
	1 000	Roadster	2002 - 2005	RR	
	1 000	Roadster	2006 - 2008	RR	
GTV	1 200		2008 - 2008	RR	

W.K.BIKES

WK	50	GTR (2T)	2010 - 2014	FL	
WK	125	SC (4T) (14"wheels)	2010 - 2014	RR	
WK	250	Jetmax (4T)	2010 - 2014	RR	

YAMAHA

JP	125	X-City	2008 - 2008	RR	
VP	125	X-City (16P)	2008 - 2015	RR	
XQ	125	/150 N Maxter	2001 - 2003	RR	
YP	125	R Majesty	2001 - 2009	RR	
YP	125	R (X-Max)	2006 - 2009	RR	
YP	125	R (X-Max - Non ABS) (39D1/5) Nissin F/Caliper	2010 - 2015	RR	
YP	125	R X-Max Sport	2011 - 2012	RR	
YP	125	R X-Max (2DM/Brembo R/Caliper)	2014 - 2016	RR	
XQ	150	Maxter	2001 - 2003	RR	
YP	150	Majesty (SG08/EBE0)	2001 - 2001	RR	
YP	180	R Majesty	2004 - 2004	RR	

EQUIVALENTS OEM

613 4 021 1A	8113751	81133898	494966	613 403 81A	5NR F5811 00	8000 95280
497083	69130 49F00	R180100127000	497394	09130 07E00	R44422001A	8133542
107 694 936	862489	862698	861760	647077	5NR F5811 10	00H04704141
613 4 038 1A	00009308000	M13400004400	497394	690 13 090 000	690 13 190 000	606 08 02 70
PE776171	GU31654681	8000B5975	861760	M1300001500	07BB2010	07BB2050
61340951A	B22 45230 0000	55120P300000	43082 0158	61313090000		

AD | S3

PART NUMBER

153

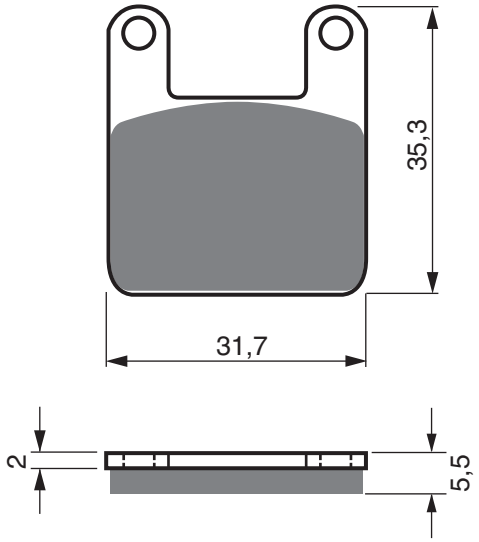

HM

50 FL RR

PART NUMBER

155

AD | S3

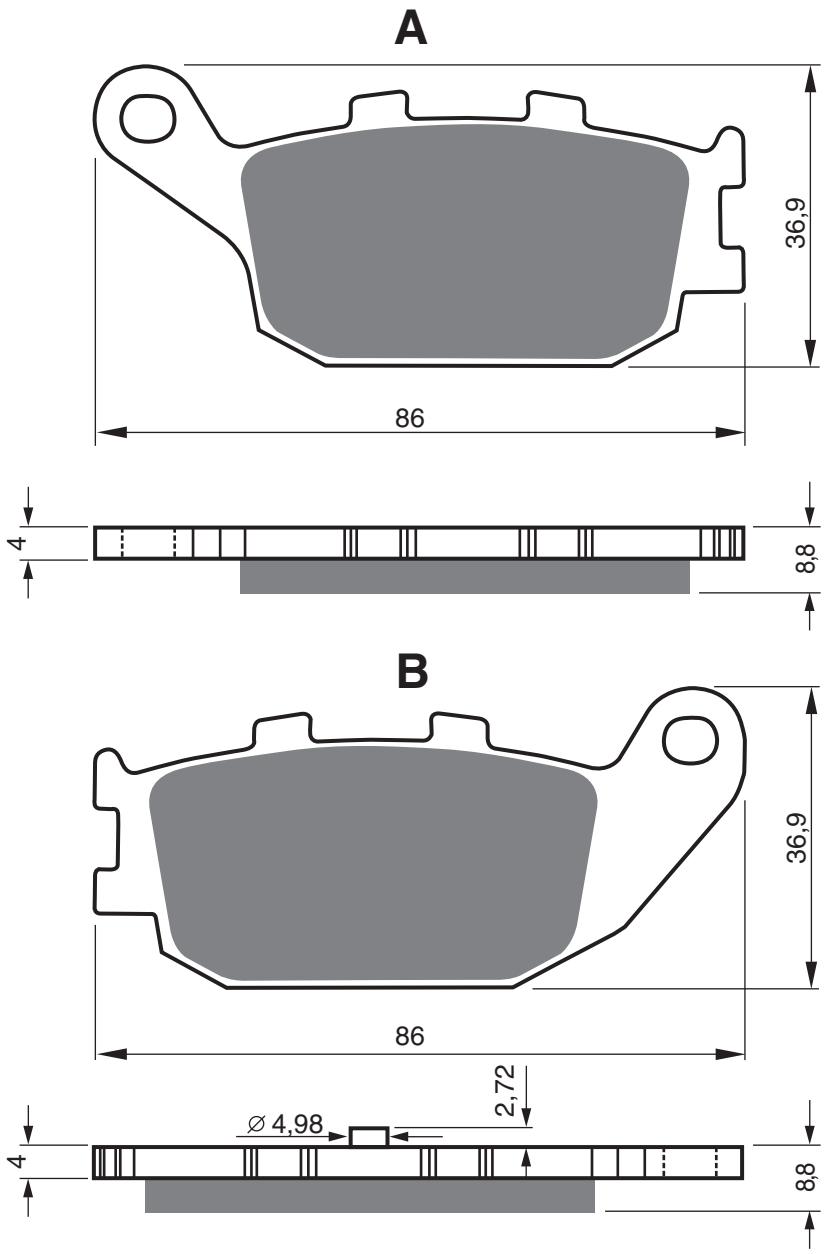

HONDA

NSS	250	Y/AY/1/A1/A3/3 Forza/Forza-S/Forza-T/Forza-ST/Jazz/Reflex (MF04/MF06)	2000 - 2004	RR

EQUIVALENTS OEM

06435 KPB 016

Disc Brake Pads

AD | S3

PART NUMBER

158

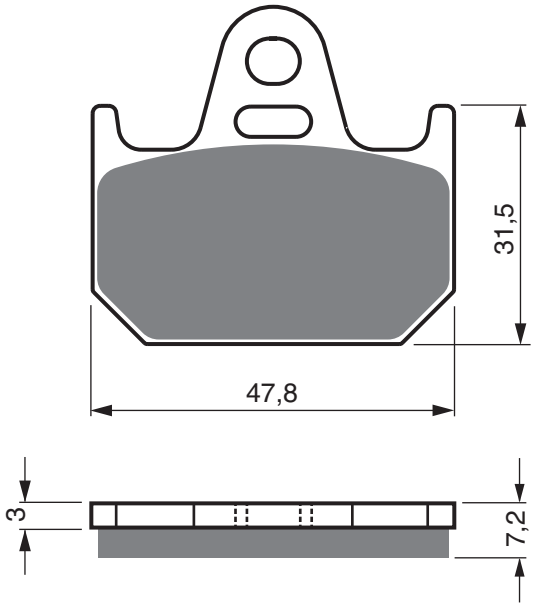

YAMAHA

TZ	125		1994 - 1997	RR
TZ	250		1989 - 2001	RR
TZ	250	(Radial Caliper)	2002 - 2010	RR

EQUIVALENTS OEM

3CL W0046 00	3LC 25811 50	3LC W0046 00	4TW W0046 00

PART NUMBER

159

AD | S3

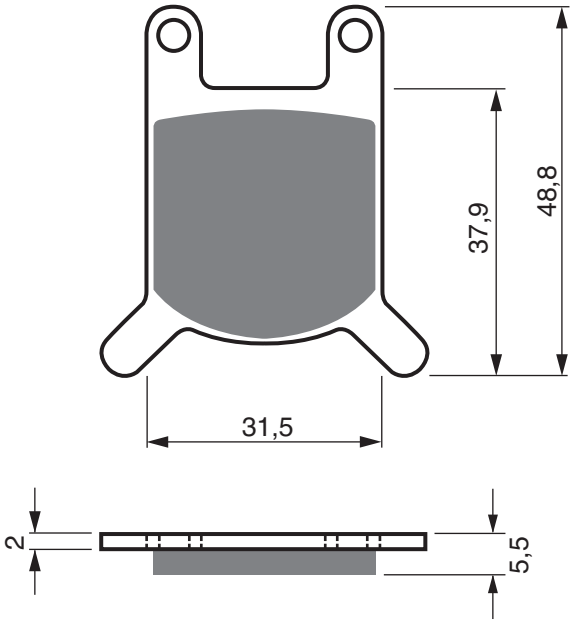

CASAL					
		All Disc Models		FL	
CIMATTI					
		Gringo	- 1985	FL	
FANTIC					
	50	Strada Super SIX	1973 - 1973	FL	
HERCULES					
		Diff. Older models with Disc Brake		FL	
KX-5				FL	
	50	Ultra, RS Ultra		FL	
RS	50	(687/C034/A)		FL	FR
	80	Ultra AC		FL	
	80	Ultra AC Chopper		FL	
	80	Ultra Chopper		FL	
	80	Ultra, F Ultra, RS Ultra		FL	
	80	XE 9		FL	
HOREX					
	80	Rebell N		FL	
	80	Rebell T	1986 - 1986	FL	
	80	Sport L	1986 - 1986	FL	
MALAGUTI					
		25/40 Chopper	1982 - 1982	FL	
		Ronco RCW	1983 - 1983	FL	
V4		Olympique	1982 - 1982	FL	
	50	Fifty HF	1982 - 1982	FL	
	50	Watercooled	1982 - 1982	FL	
XL	50	Sport	1982 - 1982	FL	
	80	Chopper	1982 - 1982	FL	

MALANCA					
	125	/ST 54/GT 5		FL	
MOTRON					
RZ1		Compact	1992 - 1992	FL	
GL4	50	ID Flash	1992 - 1992	FL	
GTD	50	Italian Max, 2	1992 - 1992	FL	
PUCH					
		all models	1986 - 1986	FL	
	50	Cobra 6 GT, GTL	1980 - 1980	FL	
	50	Monza 4 SL, GSL	1980 - 1980	FL	
M	50	SDP Cast Wheel / Grand Prix Supreme	1975 - 1977	FL	
M	50	SDP Spoke Wheel / Grand Prix Special	1975 - 1977	FL	
REAL					
	80	Nevada Sport		FL	
RIXE					
RS	80	W	1982 - 1982	FL	
ZÜNDAPP					
KS	50	Supersport (530-50/A154)	- 1979	FL	
KS	50	TT Watercooled (530-01/A153)	1980 - 1981	FL	
KS	80	(530-05/C002)	1980 - 1980	FL	
KS	80	Touring (530-07/C073)	1981 - 1981	FL	
ZWEIRAD RÖTH					
	50	Rebell Sport		FL	
	80	Rebell Sport		FL	

EQUIVALENTS OEM

359 1 40 280 0	359 1 40 283 1

AD	K5-LX	S3	S33 RACING

PART NUMBER

161

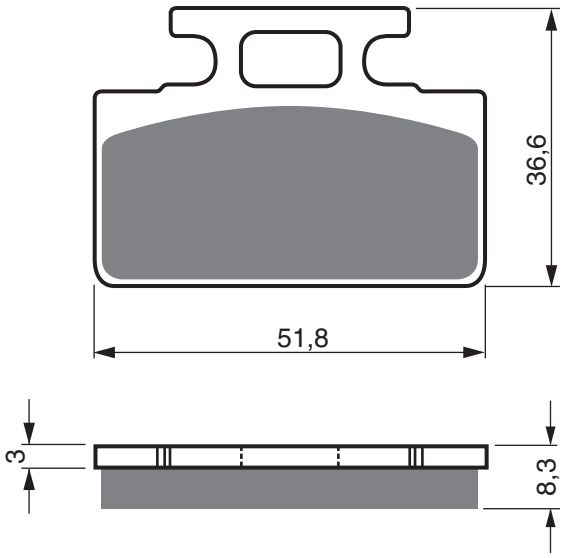

BS VILLA

ZX	50		1993 - 1993	FL

GOCCIA (ELECTRIC SCOOTERS)

		Sunday	2012 - 2015	FL

HONDA

RS	125		1988 - 2007	RR
RS	250	R	1988 - 2007	RR
NSF	250	R	2012 - 2020	RR

HONLEY

	125	Oliver	2015 - 2016	FL

KYMCO

	50	Manboy	1995 - 1995	FL
	50	Zap (Disc Brake version)	1995 -	FL

MORIWAKI

MD	250	H/S	2008 - 2013	RR

SYM

E		W00 Electrico	2011 - 2011	FL
	50	Bullet	1993 - 1993	FL
	50	Cinderella	1999 - 2000	FL
	50	Mio	2005 - 2020	FL
	50	Pure	1998 - 1998	FL
	50	Tonik (4T)	2011 - 2015	FL
DD	50	(2T)	2002 - 2012	FL
DD	50	City Trek	2002 - 2008	FL
	100	Cinderella	1999 - 2000	FL
	100	Mio	2005 - 2015	FL
	110	E-Symmetry	2012 - 2013	FL
	110	E-Virid (Electric) Deluxe	2012 - 2015	FL
	110	Tonik (4T)	2011 - 2013	FL
	125	Tonik (4T)	2011 - 2014	FL

EQUIVALENTS OEM

43105 NF5 611	43105 NF5 612	45105 GH9 710	45105 GM9 741	45105 GM9 742	45105 GM9 743	45105 GM9 743A

PART NUMBER

162

AD	K1	K5	K5-LX	S3	S33 RACING

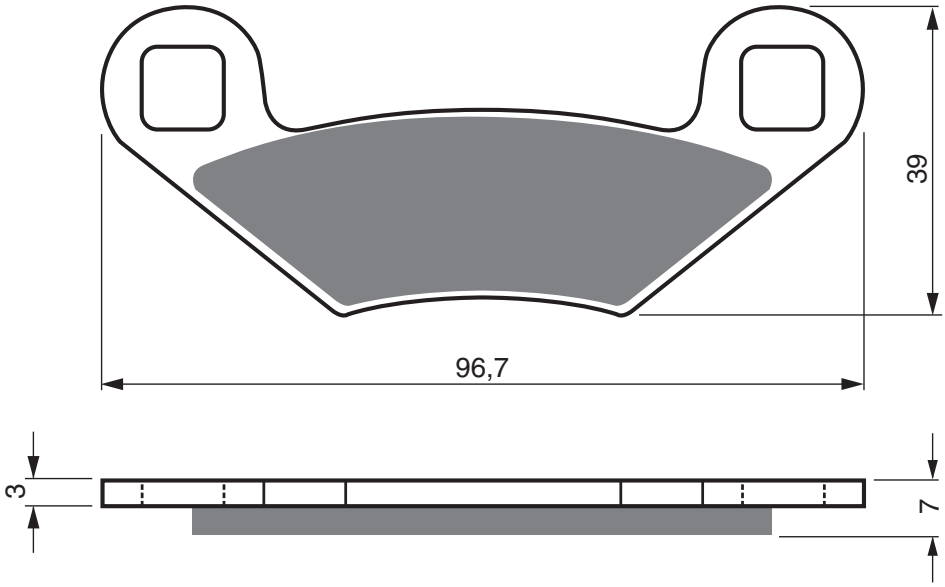

AEON

	600	Crosslander i	2014 - 2015	RR		

POLARIS

		Most Models	1989 - 2019	FL	RR	
		Trail Blazer	1990 - 1993	FL	FR	
PPS		/PTV 4x4/Series 10		FL	FR	
PPS		/PTV 6x6/Series 10		FL	FR	
PPS		LUH 6x6	2002 - 2002	FL	FR	
	200	Phoenix (AA/AB Model/Rear Drum Model)	2005 - 2005	FL	FR	
	200	Phoenix Quadricycle Model (EA/EB/Rear Disc Model)	2005 - 2005	FL	FR	
	250	2x4/4x4	1990 - 1990	FL	FR	
	250	2x4/4x4	1993 - 1993	FL	FR	
	250	Big Boss 4x6	1989 - 1992	FL	FR	
	250	Big Boss 6x6	1991 - 1993	FL	FR	
	250	Trail Blazer	1994 - 1998	FL	FR	
	250	Trail Blazer	1999 - 2000	FL	FR	
	250	Trail Blazer	2005 - 2006	FL	FR	
	250	Trail Blazer (Freedom)	2001 - 2004	FL	FR	
	250	Trail Boss	1988 - 1990	FL	FR	
	250	Trail Boss	1991 - 1999	FL	FR	
	250	Trail Boss 2x4/4x4	1988 - 1989	FL	FR	
	250	Trail Boss 2x4/4x4	1991 - 1992	FL	FR	
	250	Xplorer 4x4	2000 - 2000	FL	FR	
	300	2x4/4x4	1994 - 1995	FL	FR	
	300	Big Boss 6x6	1994 - 1994	FL	FR	
	300	Hawkeye 2x4	2008 - 2009	FL	FR	RR
	300	Hawkeye 2x4/4x4	2007 - 2007	FL	FR	RR
	300	Sportsman 4x4	2008 - 2010	FL	FR	RR
	300	Xplorer 4x4	1996 - 2000	FL	FR	
	300	Xpress 2x4	1998 - 2000	FL	FR	
	300	Xpress L	1996 - 1997	FL	FR	
	325	2x4 Hawkeye	2015 - 2015	FL	FR	
	325	Magnum (2x4) HDS)	2002 - 2002	FL	FR	
	325	Magnum 2x4/4x4	2000 - 2000	FL	FR	
	325	Magnum 2x4/4x4 Moose	2001 - 2001	FL	FR	
	325	Magnum 4x4 (A02CD32AA/AB/AC)	2002 - 2002	FL	FR	
	325	Magnum 4x4 HDS (A02CD32FB)	2002 - 2002	FL	FR	
	325	Trail Boss	2000 - 2002	FL	FR	
	325	Xpedition	2000 - 2000	FL	FR	
	325	Xpedition	2002 - 2002	FL	FR	
	330	ATP	2004 - 2005	FL	FR	RR
	330	Magnum (2x4/HDS)	2003 - 2006	FL	FR	
	330	Magnum (4x4/HDS)	2003 - 2004	FL	FR	
	330	Trail Blazer	2008 - 2009	FL	FR	
	330	Trail Blazer	2010 - 2013	FL	FR	
	330	Trail Boss	2003 - 2004	FL	FR	
	330	Trail Boss	2005 - 2009	FL	FR	
	330	Trail Boss	2010 - 2013	FL	FR	
	330	Trial Blazer	2008 - 2013	FL	FR	
	330	Trial Boss	2005 - 2013	FL	FR	
	335	Sportsman 4x4	1999 - 2000	FL	FR	
	350	Big Boss L	1993 - 1993	FL	FR	
	350	L 2x4/4x4	1990 - 1990	FL	FR	
	350	L 4x4	1993 - 1993	FL	FR	
	350	Sportsman 4x4	1993 - 1993	FL	FR	
	350	Trail Boss L 2x4	1991 - 1993	FL	FR	
	350	Trail Boss L 4x4	1991 - 1991	FL	FR	
	400	Big Boss L 6x6	1994 - 1997	FL	FR	
	400	Hawkeye HO (2x4)	2011 - 2014	FL	FR	
	400	L 2x4	1994 - 1995	FL	FR	
	400	L 4x4	1994 - 1994	FL	FR	
	400	Scrambler (2x4/4x4)	2000 - 2000	FL	FR	

AD | K1 | K5 | K5-LX | S3 | S33 RACING

PART NUMBER

162

	400	Scrambler 2x4	2002 - 2002	FL	FR	
	400	Scrambler L 4x4	1995 - 1997	FL	FR	
	400	Sport	1999 - 2000	FL	FR	
	400	Sport L	1994 - 1998	FL	FR	
	400	Sportsman	2001 - 2002	FL	FR	
	400	Sportsman	2003 - 2005	FL	FR	
	400	Sportsman HO (4x4)	2011 - 2014	FL	FR	
	400	Sportsman HO 4x4	2008 - 2010	FL	FR	RR
	400	Sportsman L 4x4	1994 - 1997	FL	FR	
	400	Trail Blazer	2003 - 2003	FL	FR	
	400	Xplorer 4x4	2001 - 2002	FL	FR	
	400	Xplorer L 4x4	1995 - 1998	FL	FR	
	400	Xplorer L 4x4	1999 - 2000	FL	FR	
	400	Xpress L	1996 - 1997	FL	FR	
	425	Magnum (2x4/4x4)	1995 - 1998	FL	FR	
	425	Magnum 6x6	1996 - 1997	FL	FR	
	425	Xpedition 4x4	2000 - 2000	FL	FR	
	450	S Outlaw	2008 - 2008	RR		
	450	Sportsman	2006 - 2007	FL	FR	
MXR	450	Outlaw	2009 - 2010	RR		
	455	Diesel	2001 - 2001	FL	FR	
	455	Diesel EBS 4x4	1999 - 2000	FL	FR	
	500	ATP HO (4x4)	2004 - 2005	FL	FR	RR
	500	Big Boss 6x6	1998 - 1999	FL	FR	
	500	Magnum	2001 - 2001	FL	FR	
	500	Magnum (4x4 HDS)	2002 - 2003	FL	FR	
	500	Magnum 4x4	2000 - 2001	FL	FR	
	500	Outlaw	2006 - 2007	FL	FR	RR
	500	Predator/TLD	2003 - 2007	FL	FR	RR
	500	Ranger 6x6	2000 - 2002	FL	FR	
	500	Revolver	2006 - 2006	FL	FR	RR
	500	Scrambler 2x4	2001 - 2002	FL	FR	
	500	Scrambler 2x4	2007 - 2008	FL	FR	
	500	Scrambler 4x4	1997 - 1997	FL	FR	
	500	Scrambler 4x4	1998 - 2004	FL	FR	
	500	Scrambler 4x4	2005 - 2012	FL	FR	
	500	Sportman 6x6	2000 - 2008	FL	FR	
	500	Sportsman 4x4	1996 - 1997	FL	FR	
	500	Sportsman EFI Quad H.O.	2008 - 2013	FL	FR	
	500	Sportsman EFi/HO	2007 - 2008	FL	FR	
	500	Sportsman Forest	2012 - 2012	FL	FR	
	500	Sportsman HO/EFi	2003 - 2006	FL	FR	
	500	Sportsman Touring EFi	2008 - 2011	FL	FR	
	500	Sportsman Touring H.O.	2008 - 2011	FL	FR	RR
	500	Sportsman Touring H.O.	2011 - 2013	FL	FR	
	500	Sportsman X2	2006 - 2008	FL	FR	
	500	Sportsman X2 EFi	2007 - 2009	FL	FR	RR
	500	Sportsman/Worker 4x4 EBS/500 RSE	1998 - 2002	FL	FR	
	500	Xplorer 4x4	1997 - 1997	FL	FR	
ATV	500	Pro 4x4 TPS	2002 - 2002	FL	FR	
	525	Outlaw IRS	2008 - 2011	RR		
	525	S Outlaw	2008 - 2010	RR		
	570	Forest Tractor EFi/EPS	2015 - 2015	FL	FR	
	570	Sportsman 6x6	2017 - 2018	FL	FR	
	570	Sportsman 6x6 Tractor	2017 - 2018	FL	FR	
	570	Sportsman EFI (Inc EPS)	2011 - 2015	FL	FR	
	570	Sportsman EFi HD	2014 - 2018	FL	FR	
	570	Sportsman EFi UTE	2014 - 2018	FL	FR	
	570	Sportsman EFi X2 EPS	2014 - 2018	FL	FR	
	570	Sportsman SP	2015 - 2018	FL	FR	
	570	Sportsman SP Touring	2015 - 2018	FL	FR	
	570	Sportsman Touring EFi EPS	2014 - 2015	FL	FR	
	570	Sportsman Touring Tractor EFi EPS	2016 - 2018	FL	FR	
RZR	570		2014 - 2020	RL	RR	
	600	Sportsman 4x4	2003 - 2005	FL	FR	
	700	Sportsman (4x4)/EFI	2002 - 2006	FL	FR	
	700	Sportsman EFi	2007 - 2007	FL	FR	
	700	Sportsman MV	2005 - 2006	FL	FR	
X2	700	Sportsman	2008 - 2008	FL	FR	RR
	800	Sportsman EFi	2005 - 2006	FL	FR	
	800	Sportsman EFI	2010 - 2013	FL	FR	
	800	Sportsman EFi 6x6	2009 - 2009	FL	FR	RR
	800	Sportsman EFi Intl/HO	2007 - 2011	FL	FR	
	800	Sportsman HO/EFi (After 16/12/2008)	2009 - 2009	FL	FR	
	800	Sportsman HO/EFi (Up to 15/12/2008)	2008 - 2008	FL	FR	
	800	Sportsman Touring EFi	2008 - 2009	FL	FR	RR
RZR	800	Ranger	2008 - 2014	RL	RR	
RZR	800	Ranger S EFi	2010 - 2014	RL	RR	
X2	800	Sportsman EFi	2007 - 2009	FL	FR	RR

EQUIVALENTS OEM

1910036	1910042	1910129	1910333	1930643	1930731	1930815
2200465	2200901	2201398	2202412	2203452	2203792	2201149
1911171						

PART NUMBER

165

AD | S3 | S33 RACING

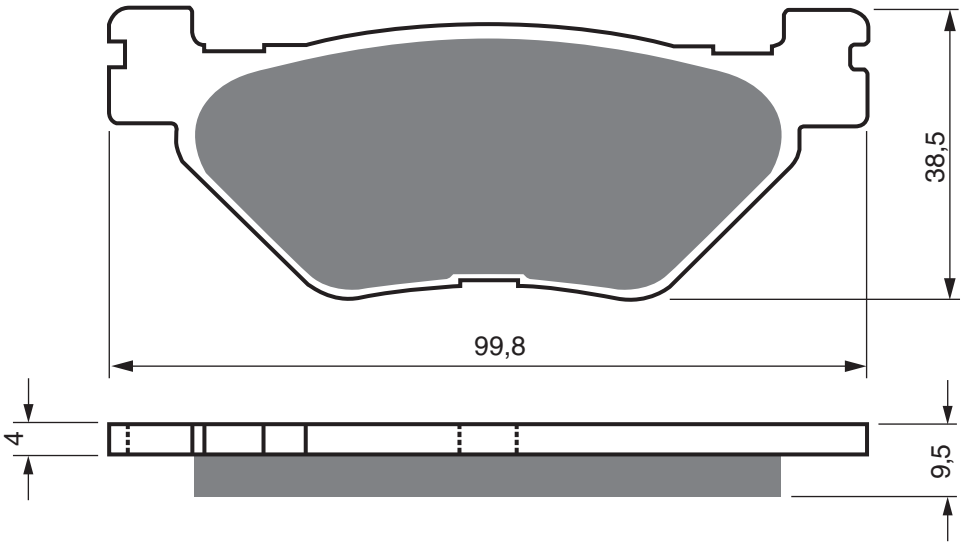

YAMAHA

TDM	900	(2B0/ABS)	2005 - 2013	RR
TDM	900	(5PS/Non ABS)	2002 - 2014	RR
SCR	950	(XVS 950XR-A)	2017 - 2018	RR
XV	950	CU - XVS 950	2014 - 2016	RR
XV	950	R-XVS 950 (2DE/Remote Reservoir Rear Shocks]	2014 - 2020	RR
XV	950	Racer (Remote Reservoir Rear Shocks)	2015 - 2016	RR
XVS	950	(Non ABS/Standard rear shocks)	2014 - 2014	RR
XVS	950	A Midnight Star	2009 - 2013	RR
XT	1 200	Z Super Tenere ABS/UBS Brake System	2010 - 2018	RR
XT	1 200	ZE Super Tenere ABS/UBS Brake System	2014 - 2018	RR
XT	1 200	ZE Super Tenere Raid Edition (ABS/UBS Brake system)	2018 - 2018	RR
FJR	1 300	A (ABS)	2006 - 2009	RR
FJR	1 300	A (ABS)	2010 - 2012	RR
FJR	1 300	A (ABS)	2013 - 2020	RR
FJR	1 300	A (ABS) (5VS-)	2003 - 2005	RR
FJR	1 300	AE (Electronic Suspension Adjustment/USD Forks)	2014 - 2021	RR
FJR	1 300	AS (ABS/Electric Shift)	2006 - 2009	RR
FJR	1 300	AS (ABS/Electric Shift)	2010 - 2012	RR
FJR	1 300	AS (ABS/Electric Shift)	2013 - 2020	RR
XVS	1 300	A Midnight Star	2007 - 2016	RR
XVS	1 300	ACFD Midnight Star/Casual Full Dresser (With Handlebar Fairing)	2014 - 2016	RR
XVS	1 300	CU Custom	2014 - 2017	RR
XV	1 700	PCR	2003 - 2005	RR
XV	1 700	V-Max	2009 - 2021	RR
XV	1 900	A Midnight Star	2006 - 2008	RR
XV	1 900	A Midnight Star	2011 - 2013	RR
XV	1 900	ACFD Midnight Star/Handlebar Fairing	2013 - 2016	RR
XV	1 900	Raider SCL	2012 - 2012	RR
XV	1 900	Roadliner	2006 - 2007	RR
XVS	1 900	A (Midnight Star 3 Spring Clutch)	2011 - 2013	RR
XVS	1 900	A (Midnight Star 3 spring clutch)	2013 - 2016	RR

EQUIVALENTS OEM

5JW W0046 00	5PS W0046 00	3P6 W0046 50	1D7 W0046 00	3D8 25806 00	1D7 25806 00

AD | S3

PART NUMBER

166

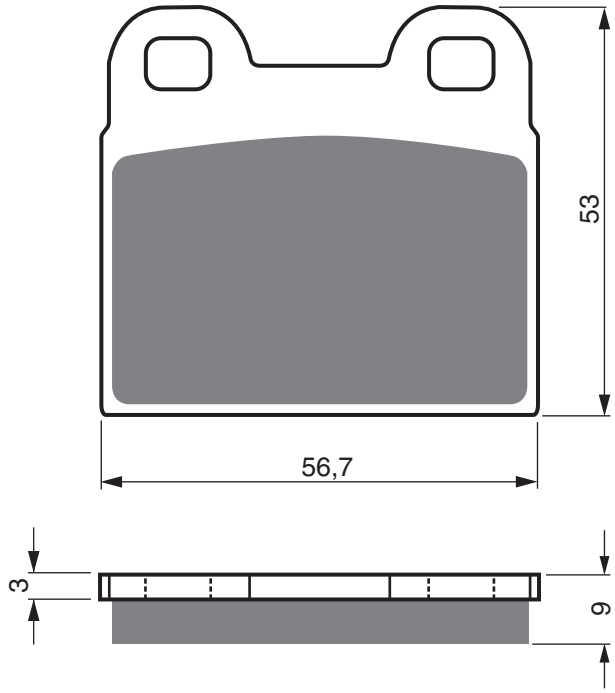

BMW

R45	450	/ 45N (Single rotor with ATE Caliper)	1978 - 1985	FL	
R45	450	/45N (Twin rotor with ATE caliper)	1978 - 1985	FL	FR
R45	450	T	1980 - 1985	FL	
R65	650	LS (ATE Caliper)	1981 - 1985	FL	FR
R65	650	T (ATE Caliper)	1980 - 1985	FL	FR

EQUIVALENTS OEM

34 71 2 301 359	34 11 1 238 083

PART NUMBER

167

AD	K5	S3	S33 RACING

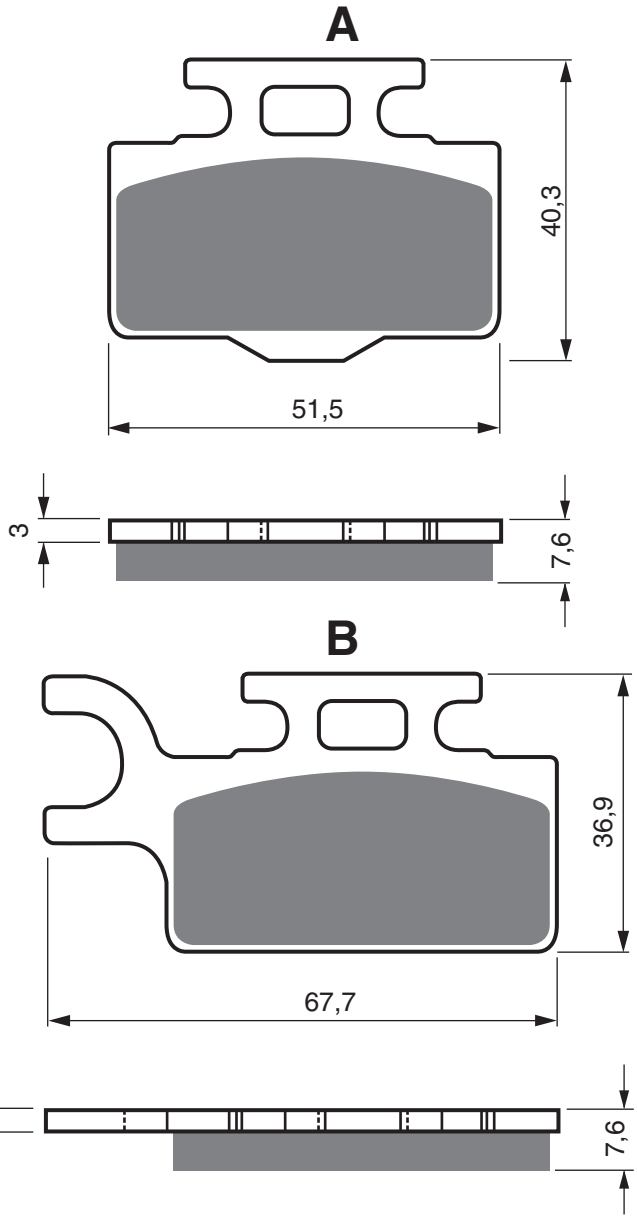

KAWASAKI

KX	65	A1/A2/A3/A4/A5/A6/A6F/A7F/A8F/A9F/AAF/ABF/ACF/ADF/ AEF/AFF/AGF/AHF/AJF	2000 - 2020	FL

SUZUKI

RM	65	K3/K4/K5	2003 - 2005	FL

EQUIVALENTS OEM

43082-1242	43082-0042	K4308-21242

Disc Brake Pads

AD	K5	S3	S33 RACING

PART NUMBER

168

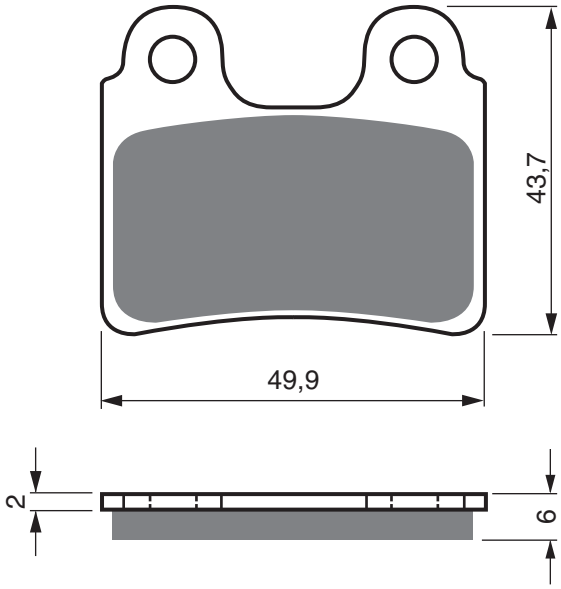

AJP

PR3	125	Enduro	2008 - 2012	RR
PR3	125	Enduro Pro	2010 - 2012	RR
PR3	125	Supermoto	2008 - 2012	RR
PR3	125	Supermoto Pro	2010 - 2011	RR
PR3	125	Trail	2011 - 2012	RR
PR4	125	Enduro	2004 - 2009	RR
PR4	125	Supermoto	2004 - 2009	RR
PR3	200	Enduro	2008 - 2011	RR
PR3	200	Enduro Pro	2010 - 2011	RR
PR3	200	M/X Pro	2010 - 2011	RR
PR3	200	MX	2010 - 2011	RR
PR3	200	Supermoto	2008 - 2011	RR
PR3	200	Supermoto Pro	2010 - 2011	RR
PR4	200	Enduro	2004 - 2009	RR

BETA

EVO	80	Senior	2009 - 2020	FL	
REV	80		2008 - 2008	FL	
EVO	125	(2T)	2009 - 2015	FL	
REV 3	125		2006 - 2008	FL	
REV3	125	/200	2000 - 2006	FL	RR
EVO	200	(2T)	2009 - 2020	FL	
REV 3	200		2000 - 2005	FL	RR
REV 3	200		2006 - 2008	FL	
EVO	250	(2T)	2009 - 2020	FL	
EVO	250	(4T)	2009 - 2020	FL	
EVO	250	Factory	2009 - 2020	FL	
REV	250	4T	2007 - 2008	FL	
REV3	250		2000 - 2004	FL	RR
REV3	250		2005 - 2008	FL	
REV3	270		2000 - 2004	FL	RR
REV3	270		2005 - 2008	FL	
EVO	300	(2T)	2009 - 2020	FL	
EVO	300	(4T)	2009 - 2020	FL	

GAS GAS

TXT-E		(Full Size Electric Bike)	2012 - 2014	FL
EC	50	Boy (LC)	2005 - 2007	FL
TXT	50	Rookie	2004 - 2009	FL
TXT	80	Cadet	2007 - 2009	FL
TXT	80	PRO Racing (2T)	2015 - 2015	FL
TXT	80	Rookie	2004 - 2009	FL
TXT	125	(TXT PRO)	2004 - 2011	FL
TXT	125	(For models with AJP Caliper with 2 pin pad fixing)	2012 - 2014	FL
TXT	125	Randonne (4T)	2012 - 2015	FL
TXT	200	(TXT PRO)	2004 - 2011	FL
TXT	200	Randonne (4T)	2014 - 2015	FL
TXT	250	(For models with AJP Caliper with 2 pin pad fixing)	2012 - 2014	FL
TXT	250	(TXT PRO)	2004 - 2011	FL
TXT	250	Contact (2T)	2015 - 2015	FL
TXT	280	(For models with AJP Caliper with 2 pin pad fixing)	2012 - 2014	FL
TXT	280	(TXT PRO)	2004 - 2011	FL
TXT	300	(For models with AJP Caliper with 2 pin pad fixing)	2012 - 2014	FL
TXT	300	(TXT PRO)	2004 - 2011	FL

MONTESA

4RT	250	Cota	2005 - 2010	FL
4RT	260	Cota (STD Version ED/3E)	2014 - 2021	FL
	315	R (Honda)	2001 - 2004	FL
	360	R (Honda)	2001 - 2004	FL

OSSA

TR	125	i	2013 - 2015	FL
	250	Explorer i	2014 - 2015	FL
TR	250	i	2014 - 2015	FL
	280	Explorer i	2012 - 2015	FL
TR	280	i	2010 - 2015	FL
TR	300	i	2014 - 2015	FL

PART NUMBER

168

AD | K5 | S3 | S33 RACING

SCORPA

	125	Twenty (2T)	2015 - 2015	FL
SR	125	(2T)	2010 - 2013	FL
SR	125	Long Ride (2T)	2010 - 2011	FL
SY	125	F	2003 - 2010	FL
SY	125	FR (4T)	2003 - 2009	FL
SY	125	FR (4T)	2009 - 2011	FL
TY	125	(4T)	2011 - 2015	FL
SY	175	F	2006 - 2006	FL
SY	200	F (4T)(163cc)	2008 - 2008	FL
	250	Twenty (2T)	2015 - 2015	FL
SY	250	F	2006 - 2010	FL
SY	250	F Long Ride (4T)	2007 - 2008	FL
SY	250	FR	2006 - 2010	FL
SY	250	FR Long Ride	2010 - 2010	FL
SY	250	Long Ride (2T)	2004 - 2006	FL
SY	250	R (2T)	2000 - 2009	FL
SR	280	(2T)	2009 - 2014	FL
SR	280	(2T) Long Ride	2009 - 2011	FL
	300	Twenty (2T)	2015 - 2015	FL

SHERCO

	80	Trials 0.8 (2T)	2006 - 2010	FL
ST	80	(2T/Braktec Caliper)	2014 - 2015	FL
	125	Trials 1.25 (2T) (AJP Caliper)	2006 - 2012	FL
FST	125		2018 - 2019	FL
ST	125	(2T/Braktec Caliper)	2014 - 2015	FL
ST-R	125		2018 - 2019	FL
TY	125	Classic	2018 - 2019	FL
XY	125	(4T)	2014 - 2015	FL
	250	Trials 2.5 (2T) (AJP Caliper)	2006 - 2012	FL
ST	250	(2T/Braktec Caliper)	2014 - 2015	FL
ST	250	Factory	2018 - 2019	FL
ST-R	250		2018 - 2019	FL
	290	Trials 2.9 (2T) (AJP Caliper)	2006 - 2012	FL
ST	290	(2T/Braktec Caliper)	2014 - 2015	FL
FST	300		2018 - 2019	FL
ST-R	300		2018 - 2019	FL
ST	305	(2T/Braktec Caliper)	2014 - 2015	FL
	320	Trials 3.2 (2T) (AJP Caliper)	2005 - 2012	FL

XISPA

X	125	R	2008 - 2009	FL
X	250	R	2008 - 2009	FL
X	280	R	2008 - 2009	FL

EQUIVALENTS OEM

45105 NN3 830	6211	25-25352	C389	00TRS01A0027	2525352000

AD	S3	S33 RACING	GP5	GP6	GP7

PART NUMBER

169

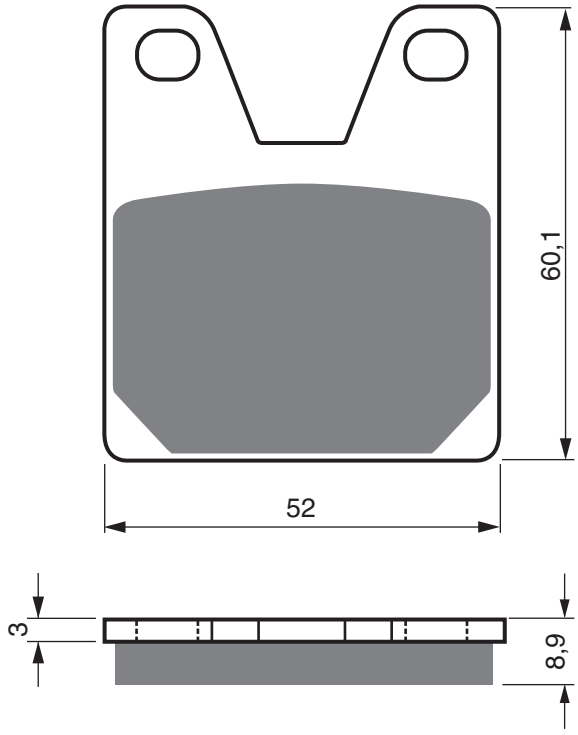

YAMAHA

X	100	SR Jet Sport	2006 - 2015	FL
YZF	750	R7 "0W02" (Road version) (5FL1)	1999 - 2001	RR
YZF	1 000	R1	1998 - 2000	RR
XJR	1 300	5EA9/5EAG (298mm front disc)	2000 - 2000	RR

EQUIVALENTS OEM

4XV W0046 00	4XV W0046 10	5EA W0046 50	5FL W0046 50

PART NUMBER

170

AD | S3

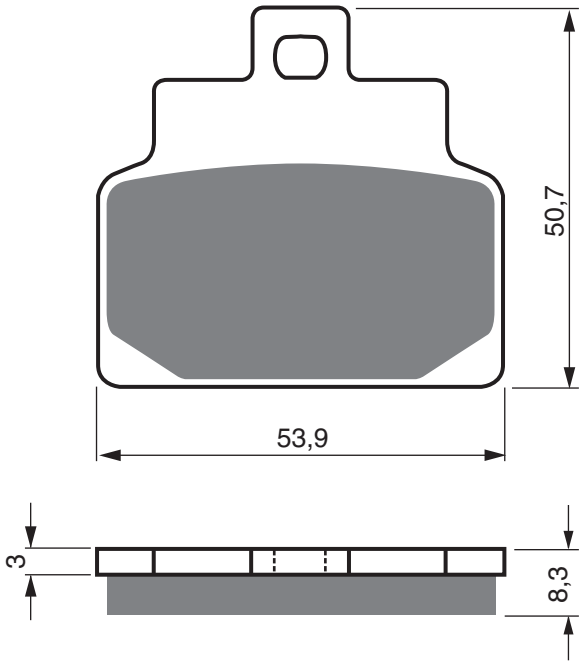

APRILIA

	100	Scarabeo (2T)	2000 - 2000	FL	
	100	Scarabeo (4T) (SA000/VA000)	2001 - 2009	FL	
	125	Habana / Habana Custom	2000 - 2002	FL	
	125	Leonardo	2005 - 2006	FL	RR
	125	Leonardo ST/SP	1999 - 2004	FL	RR
	125	Mojito	2003 - 2012	FL	
	125	Mojito Custom	2003 - 2012	FL	
SR	125		1999 - 2002	FL	
	150	Leonardo ST/SP	1999 - 2004	FL	RR
SR	150		1999 - 2002	FL	

EQUIVALENTS OEM

8213460	8213462

AD | S3

PART NUMBER

171

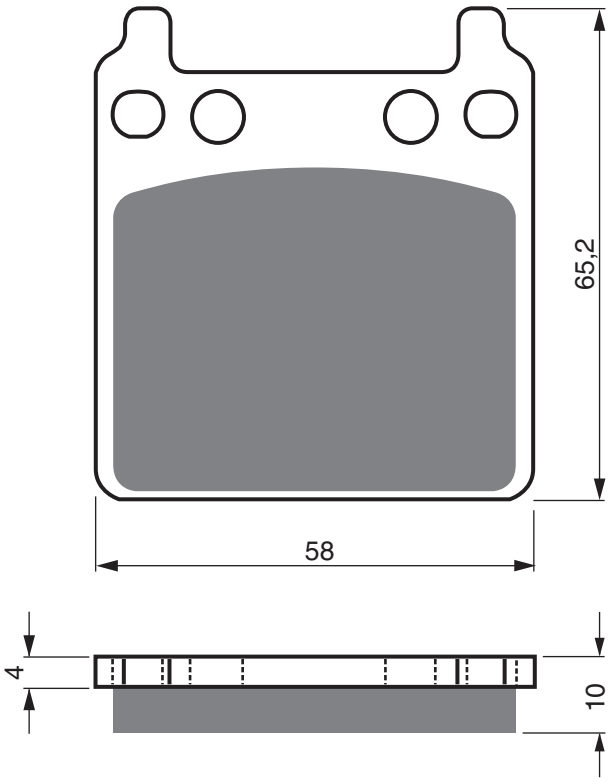

HONDA

CB	750	F/F1	1976 - 1977	RR
GL	1 000	K/K1/K2 Goldwing (6 Bolt disc fixing)	1975 - 1977	RR
GL	1 000	K3 Goldwing	1978 - 1978	RR
GL	1 000	Z Goldwing (5 Bolt disc fixing)	1979 - 1979	RR

PERFORMANCE MACHINES

	2 Piston Race Caliper(Pm 0056-1600)	RR

EQUIVALENTS OEM

431A0 431 673	43211 371 006	43211 392 006	43211 392 016	43211 431 671	43211 431 672	43211 431 673

PART NUMBER

172

AD | S3

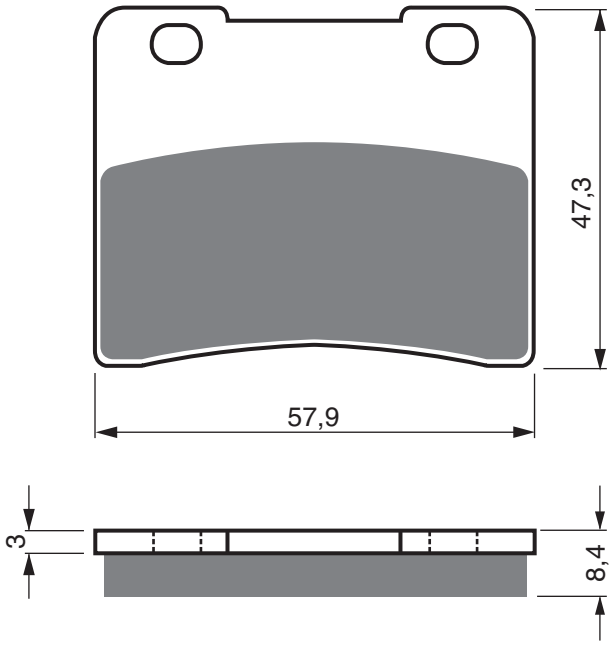

SUZUKI

RG	250	WE/FG/CH/FCH/FH Gamma	1984 - 1988	FL	FR
GSX	400	R2/RG (GK71B/F)	1985 - 1986	FL	FR

EQUIVALENTS OEM

59130 04A00	59130 04A10	5910004830

AD	K1	K5	S3	S33 RACING

PART NUMBER

173

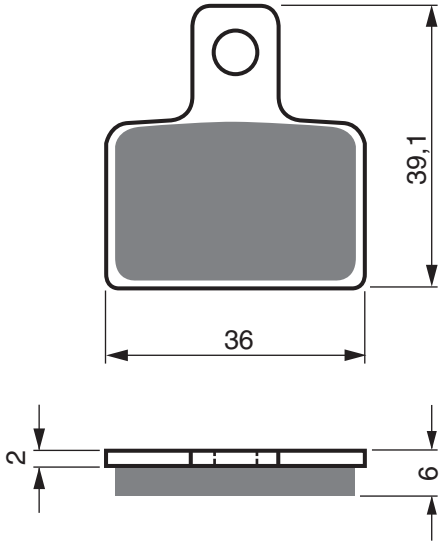

APRILIA					
RX	50	Mini Experience	2004 - 2004	FL	
BETA					
		Minicross Pro Race 12/10	2004 - 2006	FL	RR
		Minitrial LC (Hydraulic Brakes)	2013 - 2015	FL	
	50	Minitrial (A/C)	2009 - 2012	FL	
	50	Pro Race	2004 - 2005	RR	
FACTORY					
R14	50	Phantom Aqua	2004 - 2004	FL	
GAS GAS					
TXE		Electric Bike	2020 - 2020	RR	
TXT-E		(Full Size Electric Bike)	2012 - 2014	RR	
EC	50		2006 - 2007	RR	
EC	50	Boy (Air Cooled)	2005 - 2005	RR	
EC	50	Boy (LC)	2005 - 2007	RR	
MC	50	Cross	2006 - 2006	RR	
TXT	50	Cadet	2006 - 2009	RR	
TXT	50	Rookie	2004 - 2009	RR	
MC	65	Cross	2005 - 2006	FL	RR
MX	65		2005 - 2008	FL	
TXT	80	Cadet	2006 - 2006	FL	RR
TXT	80	Cadet	2007 - 2009	RR	
TXT	80	PRO Racing (2T)	2015 - 2015	RR	
TXT	80	Rookie	2004 - 2009	RR	
TXT	125	(TXT PRO)	2004 - 2011	RR	
TXT	125	(For models with AJP Caliper with 2 pin pad fixing)	2012 - 2014	RR	
TXT	125	(For models with Formula front caliper/single pin pad fixing)	2012 - 2014	RR	
TXT	125	Racing (2T Monobloc Caliper)	2014 - 2019	RR	
TXT	125	Randonne (4T)	2012 - 2015	RR	
TXT	125	Replica Factory (2T Monobloc Caliper)	2013 - 2014	RR	
TXT	125	Racing (2T)	2021 - 2021	RR	
TXT	125	GP (2T)	2021 - 2021	RR	
TXT	200	(TXT PRO)	2004 - 2011	RR	
TXT	200	Randonne (4T)	2014 - 2015	RR	
TXT	250	(For models with AJP Caliper with 2 pin pad fixing)	2012 - 2014	RR	
TXT	250	(For models with Formula front caliper/single pin pad fixing)	2012 - 2014	RR	
TXT	250	(TXT PRO)	2004 - 2011	RR	
TXT	250	Contact (2T)	2015 - 2015	RR	
TXT	250	Racing (2T Monobloc Caliper)	2014 - 2019	RR	
TXT	250	Replica Factory (2T Monobloc Caliper)	2013 - 2014	RR	
TXT	250	Racing (2T)	2021 - 2021	RR	
TXT	250	GP (2T)	2021 - 2021	RR	
TXT	280	(For models with AJP Caliper with 2 pin pad fixing)	2012 - 2014	RR	
TXT	280	(For models with Formula front caliper/single pin pad fixing)	2012 - 2014	RR	
TXT	280	(TXT PRO)	2004 - 2011	RR	
TXT	280	Racing (2T Monobloc Caliper)	2014 - 2019	RR	
TXT	280	Replica Factory (2T Monobloc Caliper)	2013 - 2014	RR	
TXT	280	Racing (2T)	2021 - 2021	RR	
TXT	280	GP (2T)	2021 - 2021	RR	
TXT	300	(For models with AJP Caliper with 2 pin pad fixing)	2012 - 2014	RR	
TXT	300	(For models with Formula front caliper/single pin pad fixing)	2012 - 2014	RR	
TXT	300	(TXT PRO)	2004 - 2011	RR	
TXT	300	Racing (2T Monobloc Caliper)	2014 - 2019	RR	
TXT	300	Replica Factory (2T Monobloc Caliper)	2013 - 2014	RR	
TXT	300	Racing (2T)	2021 - 2021	RR	
TXT	300	GP (2T)	2021 - 2021	RR	
HM					
	10	Baja /10 JR&SR	1999 - 2007	FL	RR
MX	12	/14 Baja	1999 - 2009	FL	RR

PART NUMBER

173

AD	K1	K5	S3	S33 RACING

HUSQVARNA

CR	50	Junior	2005 - 2005	FL	
CR	50	Senior Pro	2005 - 2005	FL	
TE	100		2005 - 2005	FL	

MACBOR

XC	50	510 Racing	2004 - 2004	FL	
XC	50	512 Pro	2004 - 2004	FL	
XC	50	512 Racing	2004 - 2004	FL	
XC	50	512 T	2004 - 2004	FL	
XC	50	515 R 6V	2004 - 2004	FL	

METRAKIT

XL	80	Mini GP	2009 - 2009	RR	
	125	Pre GP	2009 - 2009	RR	

MONTESA

4RT	250	Cota	2005 - 2010	RR	
	260	4 Ride Enduro (260cc/4T)	2016 - 2018	RR	
4RT	260	Cota (STD Version ED/3E)	2014 - 2018	RR	
4RT	260	Cota (Repsol Edition 2E/4E)	2014 - 2018	RR	
RR	300	Cota (4T)	2016 - 2016	RR	
	315	R (Honda)	2001 - 2004	RR	
	360	R (Honda)	2001 - 2004	RR	

OSSA

TR	125	i	2013 - 2015	RR	
	250	Explorer i	2014 - 2015	RR	
TR	250	i	2014 - 2015	RR	
	280	Explorer i	2012 - 2015	RR	
TR	280	i	2010 - 2015	RR	
TR	300	i	2014 - 2015	RR	

POLINI

XP4	50	Street (10" wheels)		FL	RR
XP	65	R		FL	RR
XP4	125	Off Road (14" front/12" rear wheel)		FL	RR
XP4	125	Street (10" wheels)		FL	RR

SACHS

	125	Dirty Devil	2008 - 2008	FL	RR

SCORPA

	125	Twenty (2T)	2015 - 2015	RR	
SY	125	4T Long Ride	2009 - 2010	RR	
SY	125	FR (4T)	2003 - 2009	RR	
TY	125	(4T)	2011 - 2015	RR	
TYS	125	F	2006 - 2008	RR	
SY	175	F	2006 - 2006	RR	
TY-S	175	F	2006 - 2006	RR	
SY	200	F (4T)(163cc)	2008 - 2008	RR	
	250	Twenty (2T)	2015 - 2015	RR	
SY	250	(2T)	2000 - 2005	RR	
SY	250	F	2006 - 2010	RR	
SY	250	F Long Ride (4T)	2007 - 2008	RR	
SY	250	FR	2006 - 2010	RR	
SY	250	FR Long Ride	2010 - 2010	RR	
SY	250	Long Ride (2T)	2004 - 2006	RR	
SY	250	R (2T)	2000 - 2009	RR	
SR	280	(2T)	2009 - 2014	RR	
SR	280	(2T) Long Ride	2009 - 2011	RR	
	300	Twenty (2T)	2015 - 2015	RR	
	660	Raidster (Rear pad with large friction area)	2007 - 2007	RR	

SHERCO

	80	Trials 0.8 (2T)	2006 - 2010	RR	
ST	80	(2T/Braktec Caliper)	2014 - 2015	RR	
ST	80	2T (Formula caliper)	2013 - 2014	RR	
	125	Trials 1.25 (2T) (AJP Caliper)	2006 - 2012	RR	
FST	125		2018 - 2019	RR	
ST	125	(2T/Braktec Caliper)	2014 - 2015	RR	
ST	125	2T (Formula caliper)	2013 - 2014	RR	
ST-R	125		2018 - 2019	RR	
TY	125	Classic	2018 - 2019	RR	
XY	125	(4T)	2014 - 2015	RR	
	250	Trials 2.5 (2T) (AJP Caliper)	2006 - 2012	RR	
ST	250	(2T/Braktec Caliper)	2014 - 2015	RR	
ST	250	2T (Formula caliper)	2013 - 2014	RR	
ST	250	Factory	2018 - 2019	RR	
ST-R	250		2018 - 2019	RR	
	290	Trials 2.9 (2T) (AJP Caliper)	2006 - 2012	RR	
ST	290	(2T/Braktec Caliper)	2014 - 2015	RR	
ST	290	2T (Formula caliper)	2013 - 2014	RR	
ST	290	Cabastany Replica (2T/Formula Caliper)	2012 - 2012	RR	
FST	300		2018 - 2019	RR	
ST-R	300		2018 - 2019	RR	
ST	305	(2T/Braktec Caliper)	2014 - 2015	RR	
ST	305	2T (Formula caliper)	2013 - 2014	RR	
	320	Trials 3.2 (2T) (AJP Caliper)	2005 - 2012	RR	

TOMOS

MC	50	Senior Pro	2005 - 2007	FL	RR

XISPA

X	125	R	2008 - 2009	RR	
X	250	R	2008 - 2009	RR	
X	280	R	2008 - 2009	RR	

EQUIVALENTS OEM

43105 NN3 820	7040	C390	BT280222068	KM0961320	810K0209	S10B-40202-00-00
43105 NN3 830						

AD | S3 | S33 RACING

PART NUMBER
174

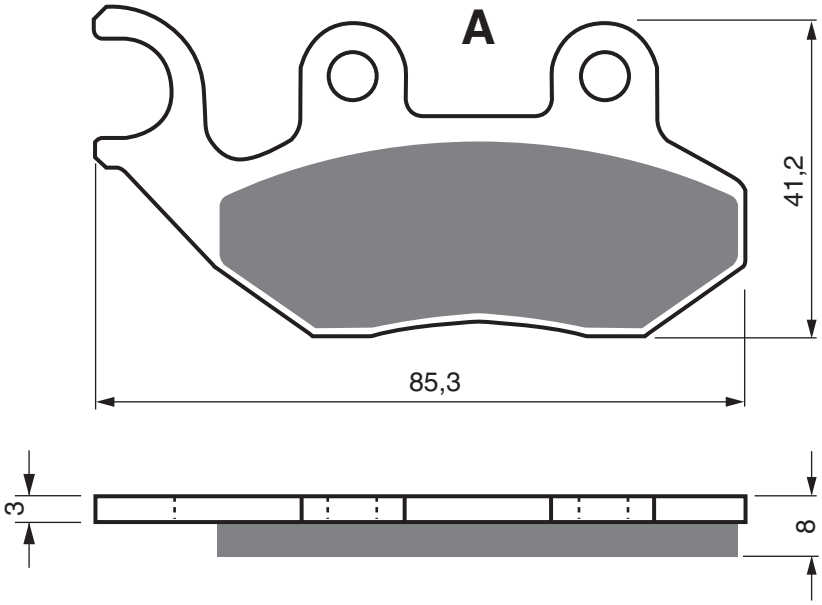

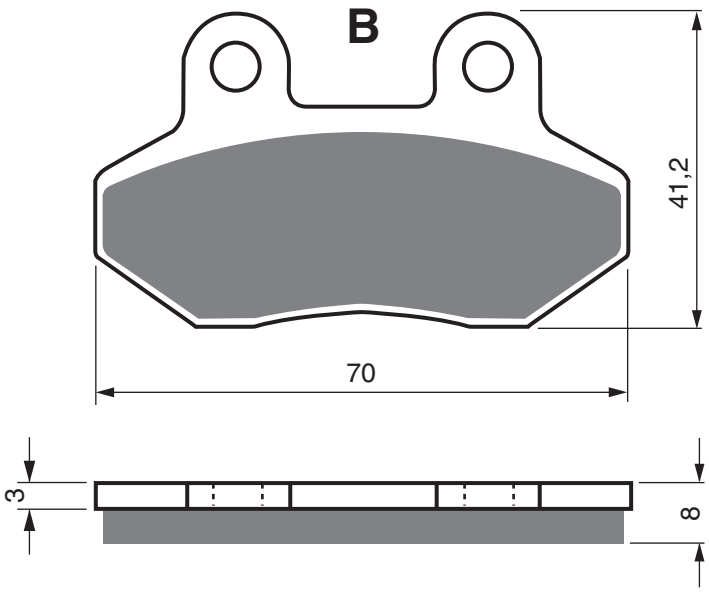

ADIVA SCOOTERS

AD	125		2009 - 2011	FL	
AR	125		2010 - 2011	FL	
AD	200		2009 - 2011	FL	
AR	200		2010 - 2011	FL	

AJS

	50	Crazy Naked	2013 - 2014	FL	

BAROSSA QUADS

XS	125	T-13	2007 - 2010	FR	

CAGIVA

	50	Stella	1997 - 1997	FL	RR
	125	Passing	1993 - 1997	FL	

GARELLI

KRS	50		2002 - 2002	FL	
	125	Freeland	2002 - 2002	FL	
	125	Joker	2002 - 2002	FL	
	150	Freeland	2002 - 2002	FL	
	150	Joker	2002 - 2002	FL	

GENERIC

	50	Vendetta (2T)	2012 - 2013	FL	

LAMBRETTA

LJ	50		2012 - 2013	FL	
LT	50		2012 - 2013	FL	
LN	125	(4T)	2010 - 2013	FL	
LN	151	(4T)	2010 - 2013	FL	

PEUGEOT

	50	New Tweet Evo (4T/Rear Drum Model)	2015 - 2019	FL	
	50	New Tweet Evo RS (4T)	2014 - 2015	FL	
	50	Tweet (4T/Rear Drum Model)	2010 - 2013	FL	
	50	Tweet RS (4T/ Rear Disc Model)	2010 - 2013	FL	
	125	Belville Allure	2018 - 2020	FL	
	125	Belville RS	2018 - 2020	FL	
	125	New Tweet Evo (4T / Rear disc model)	2014 - 2020	FL	
	125	New Tweet Evo (4T)	2014 - 2020	FL	
	125	New Tweet Evo RS (4T)	2014 - 2020	FL	
	125	Tweet (4T/Rear Disc Model)	2012 - 2013	FL	

PART NUMBER

174

AD | S3 | S33 RACING

	125	Tweet (4T/Rear Drum Model)	2010 - 2012	FL	
	125	Tweet RS (4T/Rear Disc Model)	2010 - 2013	FL	
LXR	125	(4T)	2010 - 2013	FL	
	150	New Tweet Evo (4T)	2014 - 2018	FL	
	150	New Tweet Evo RS (4T)	2014 - 2018	FL	
	150	Tweet (4T/Rear Drum Model)	2010 - 2012	FL	
	150	Tweet RS (4T/Rear Disc Model)	2010 - 2012	FL	
	150	Tweet (4T/Rear Drum Model)	2010 - 2012	FL	
	200	Belville Allure	2018 - 2019	FL	
	200	Belville RS	2018 - 2019	FL	
LXR	200	i (4T)	2010 - 2012	FL	
PGO					
		i-Dep Electric Scooter	2009 - 2009	FL	RR
	50	Big Max (Front wave disc)	2007 - 2009	FL	
	50	Big Max Naked (Round Disc/No Cover on H-Bars)	2007 - 2009	FL	
	50	Big Max S	2003 - 2004	FL	
	50	G-Max	2005 - 2007	FL	
	50	G-Max (Wave disc)	2008 - 2009	FL	
	50	G-Max Naked (Wave disc)	2009 - 2009	FL	
	50	Libra (2T)	2009 - 2009	FL	
	50	Ligero (2T)	2008 - 2012	FL	
	50	T-Rex	1999 - 2012	FL	
	50	T-Rex 3 (3 wheeler)	2003 - 2004	FL	FR
PMX	50	/110	2000 - 2007	FL	
PMX	50	Naked		FL	
	100	/125 My Bubu	2002 - 2002	FL	
	100	/125 Young Bubu	2002 - 2002	FL	
	100	Bubu	2003 - 2008	FL	
	110	T-Rex	1999 - 2006	FL	
	125	Bubu	2003 - 2008	FL	
	125	Charge A/B	2001 - 2002	FL	
	125	i-Charge	2003 - 2005	FL	
	125	Libra EFi (4T)	2009 - 2012	FL	
	125	Ligero	2006 - 2008	FL	
	125	Ligero (4T)	2008 - 2012	FL	
	125	T-Rex (Wave disc)	2008 - 2012	FL	
	125	Tigra (4T/4V)	2012 - 2012	FL	
	150	Libra (4T)	2009 - 2009	FL	
	150	T-Rex	2001 - 2001	FL	
	150	TR3	2002 - 2002	FL	
TR-3	150	(3 wheeler)	2003 - 2009	FL	FR
SCOMADI					
TL	200	Liquid Cooled	2015 - 2019	RR	
SINNIS					
	50	Orbit II (4T)	2012 - 2014	FL	
	50	Orbit II Naked (4T)	2012 - 2014	FL	
	50	Orbit II TS (4T)	2012 - 2014	FL	
X-Pro	50		2013 - 2014	FL	
SYM					
	50	Allo (4T)	2011 - 2015	FL	
	50	Allo GT (4T)	2013 - 2015	FL	
	50	Crox (4T)	2015 - 2015	FL	
	50	Fiddle II	2008 - 2015	FL	
	50	Fiddle III (4T)	2014 - 2020	FL	
	50	Jet	1999 - 2005	FL	
	50	Jet 4 (4T)	2010 - 2015	FL	
	50	Jet 4 R Naked (50/4T)	2013 - 2015	FL	
	50	Jet 4 R50 (2T)	2011 - 2015	FL	
	50	Jet Euro X	2005 - 2014	FL	
	50	Jet Evo (2T)	2013 - 2015	FL	
	50	Jet Sport	2014 - 2015	FL	
	50	Jet Sport S	2014 - 2015	FL	
	50	Mask	2000 - 2005	FL	
	50	Red Devil	1999 - 2009	FL	
	50	Symphony S (4T) Rear Disc Model	2010 - 2020	FL	
	50	Symphony SR (4T/Rear Disc Model)	2010 - 2015	FL	
	50	Symply	2007 - 2008	FL	
	50	Symply 11	2009 - 2013	FL	
	50	X'Pro	2013 - 2015	FL	
SR	50	Jet Sport X	2006 - 2015	FL	
	125	Allo (4T)	2011 - 2015	FL	
	125	City Com	2008 - 2013	FL	
	125	Crox (4T)	2015 - 2015	FL	
	125	Fiddle II	2008 - 2015	FL	
	125	Fiddle III (4T)	2014 - 2020	FL	
	125	Jet 4 (4T)	2010 - 2015	FL	
	125	Megalo	2000 - 2006	FL	
	125	Symphony	2009 - 2015	FL	
	125	Symphony S (4T) Rear Disc Model	2010 - 2020	FL	
	125	Symphony SR (4T) Rear Disc Model	2010 - 2015	FL	
	125	Symply	2007 - 2008	FL	
	125	X'Pro	2013 - 2015	FL	
HD	125	Evo (Carb & EFi Models / 4T / Single Headlamp)	2003 - 2013	FL	
HD	125	S Evo	2007 - 2007	FL	
HD2	125	i (4T)	2010 - 2015	FL	
	150	Crox (4T)	2015 - 2015	FL	
	150	Jet 4	2013 - 2015	FL	
	150	Allo (4T)	2011 - 2015	FL	
	151	Fiddle II	2008 - 2015	FL	
	151	Symphony S (4T) Rear Disc Model	2010 - 2015	FL	
	151	Symphony SR (4T) Rear Disc Model	2010 - 2015	FL	
	200	Fiddle III (4T)	2014 - 2015	FL	RR
H	200	SE	2006 - 2006	FL	
HD	200	Evo (Carb & EFi Models / 4T / Single Headlamp)	2003 - 2013	FL	
HD	200	S Evo	2007 - 2007	FL	
HD2	200	i (4T) (Twin Headlamps)	2010 - 2015	FL	
	300	City Com i	2008 - 2014	FL	RR
	300	City Com S i (CBS)	2015 - 2015	FL	RR
TGB					
	50	101R	2004 - 2008	FL	
	50	Akros Tec	2003 - 2004	FL	
	50	Delivery Scooter (Up to E/F No 609099)	2004 - 2005	FL	
202	50	Classic (50cc)	2003 - 2014	FL	
	125	Bellavita i (4T)	2012 - 2014	FL	
	300	Bellavita i (4T)	2012 - 2014	FL	
TOMOS					
	50	Twister		FL	
	125	Twister		FL	
ZERO					
DS		ZF6 (2 Pin Fixing F-Pad)	2010 - 2012	FL	
DS		ZF9 (2 Pin Fixing F-Pad)	2010 - 2012	FL	
MX		(2 Pin Fixing F Caliper)	2010 - 2012	FL	
S		ZF6 (2 Pin Fixing F-Pad)	2010 - 2012	FL	
X		(2 Pin Fixing F Caliper)	2010 - 2012	FL	
XU		(2 Pin Fixing F Caliper)	2010 - 2012	FL	

EQUIVALENTS OEM

45105 H13 000 AC	45105 G22 000 AC	45105 G02 000 AS	45105 APA000A	Z00FA1409	PE801968	45105 HHA 000A
45105 LEA 010A						

K5	S33 RACING	GP5	GP6	GP7

PART NUMBER

175

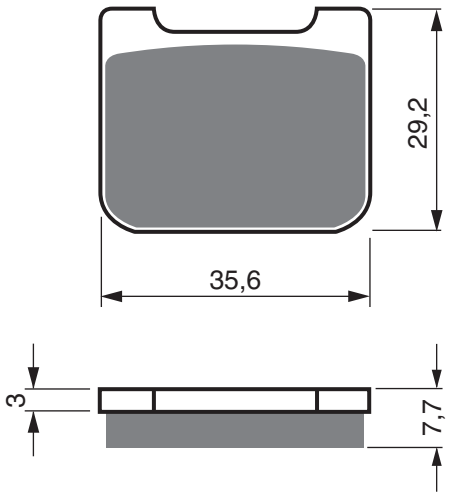

BREMBO RACING CALIPERS

P2 24 (X206001) Rear caliper	RR

Disc Brake Pads

PART NUMBER

176

AD	K1	K5	K5-LX	S3	S33 RACING

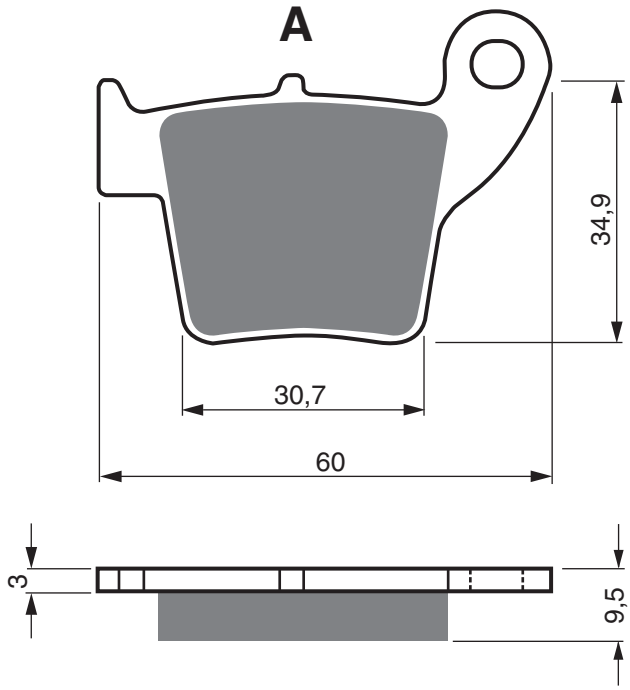

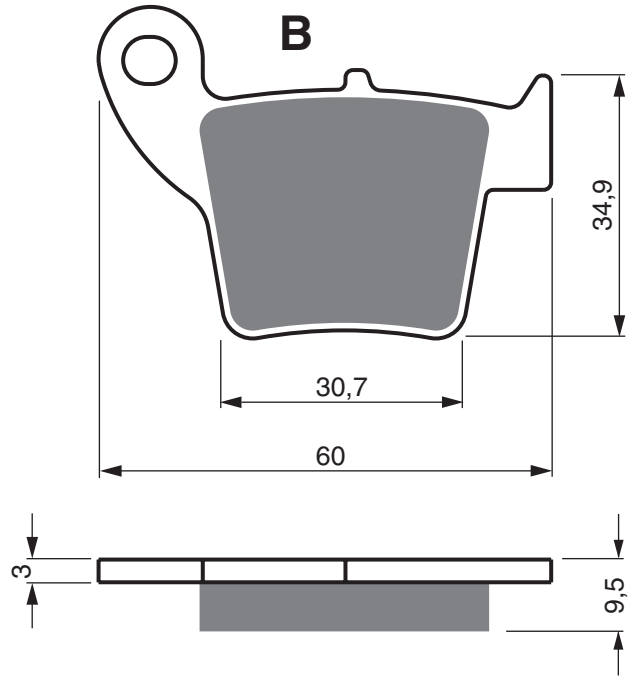

ALFER

EVX	400	Electric	2012 - 2013	RR

FANTIC

TR	125	CR (2T) Cross Competizione	2013 - 2013	RR
TR	125	MR (2T) Motard Competizione	2013 - 2013	RR
TZ	125	CS (2T) Caballero Cross	2011 - 2012	RR
TZ	125	ES (125 ES / 2T) Regolarita Scuderia	2011 - 2012	RR
TZ	125	SM Caballero Motard (2T)	2011 - 2012	RR
TZ	170	E Regolarita (125 E / 4T)	2011 - 2015	RR
TZ	170	ER Caballero Regolarita Competizione (125 ER / 4T)	2011 - 2015	RR
TZ	170	M Motard Casa (125SM/4T)	2011 - 2015	RR
TZ	170	MR (125 MR 4T) Motard	2011 - 2015	RR
TX	180	E Regolarita (49cc/2T)	2011 - 2015	RR
TX	180	ER Regolarita Copetizione (49cc/2T)	2012 - 2015	RR
TX	180	ES Regolarita Scuderia (49cc/2T)	2012 - 2015	RR
TX	180	SM Motard (49cc/2T)	2011 - 2015	RR
TX	180	SMR Motard Competizione (49cc/2T)	2012 - 2015	RR
TZ	180	MR Motard Competizione (49cc/2T)	2011 - 2015	RR
TZ	200	ER Caballero Regolarita (200 ER / 4T)	2011 - 2015	RR
TZ	200	SMR Motard (200 SMR / 4T)	2011 - 2015	RR
TF	250	ES Regolarita (4T)	2011 - 2013	RR
TR	250	ES (2T) Enduro Six Days	2013 - 2013	RR
TZ	250	ES Regolarita (2T)	2011 - 2012	RR
TR	300	ES (2T) Enduro Six Days	2013 - 2013	RR
TZ	300	ES Regolarita Scuderia	2011 - 2012	RR

AD	K1	K5	K5-LX	S3	S33 RACING

PART NUMBER

176

HM

CR	50	Derapage RR From ZEN50XACEMA7700385	2007 - 2009	RR
CRE	50	Baja RR	2010 - 2012	RR
CRE	50	Baja RR From ZEN50XACEA7700325	2007 - 2009	RR
CRE	50	Six Competition	2007 - 2008	RR
CRE	50	Six Competition	2010 - 2012	RR
CRM	50	Derapage Competition	2007 - 2009	RR
CRM	50	Derapage Competition	2009 - 2012	RR
CR	125	Motard	2004 - 2004	RR
CRE	125	(Baja RR 2T)	2011 - 2011	RR
CRE	125	(Six Competition 2T)	2011 - 2011	RR
CRE	125	R Enduro	2002 - 2003	RR
CRE	125	R Enduro	2004 - 2006	RR
CRE	125	R Supermotard	2003 - 2003	RR
CRE-F	125	X	2009 - 2009	RR
CRE-F	125	X Six (4T)	2010 - 2011	RR
CRM	125	(Derapage Competition 2T)	2011 - 2012	RR
CRM	125	(Derapage RR 2T)	2011 - 2011	RR
CRM	125	(Six Competition 2T)	2010 - 2011	RR
CRM	125	R Supermoto	2007 - 2007	RR
CRM F	125	X (Derapage Competition 4T)	2010 - 2011	RR
CRM-F	125	X	2009 - 2009	RR
CR	150	R/R2	2007 - 2009	RR
CRF	150	R	2007 - 2009	RR
CRF	230	Easy Enduro	2004 - 2007	RR
CRF	230	Easy Motard	2004 - 2007	RR
CRF	230	Easy Trail	2004 - 2007	RR
CRE	250		2002 - 2002	RR
CRE	250	F Enduro	2004 - 2004	RR
CRE	250	R Enduro	2002 - 2006	RR
CRE	250	R Moto	2004 - 2004	RR
CRE	250	R Supermoto	2002 - 2003	RR
CRE	250	X		RR
CRE-F	250	R	2008 - 2009	RR
CRE-F	250	X	2008 - 2011	RR
CRF	250	F	2004 - 2008	RR
CRF	250	Motard	2004 - 2004	RR
CRF	250	R	2008 - 2009	RR
CRM	250	X Supermoto	2007 - 2007	RR
CRE-F	290	X	2007 - 2007	RR
CRE-F	300	X	2008 - 2009	RR
CRE	450	F	2002 - 2002	RR
CRE	450	F Enduro	2002 - 2004	RR
CRE	450	F Supermoto	2002 - 2003	RR
CRE	450	Supermoto	2002 - 2003	RR
CRE	450	X		RR
CRF	450	Motard	2004 - 2006	RR
CRF	450	R	2004 - 2008	RR
CRM	450	R/X Supermoto	2007 - 2007	RR
CRE-F	490	X	2007 - 2007	RR
CRM-F	490	X Supermoto	2007 - 2007	RR
CRE-F	500	X	2008 - 2009	RR
CRM-F	500	X	2011 - 2011	RR

HONDA

CR	125	R2	2002 - 2002	RR
CR	125	R3/R4/R5/R6/R7	2003 - 2007	RR
CRF	150	R Small wheel (FR 17"/RR 14")	2007 - 2021	RR
CRF	150	RB Big wheel (FR 19"/RR 16")	2007 - 2021	RR
CR	250	R2/R3/R4/R5/R6/R7	2002 - 2007	RR
CRF	250	R4/R5/R6/R7	2004 - 2007	RR
CRF	250	R8/R9/RA/RB/RC/RD/RE/RF/RG	2008 - 2016	RR
CRF	250	RE (Limited Road Use)	2016 - 2016	RR
CRF	250	RF/RG/RH/RJ (260mm F/Disc)	2015 - 2021	RR
CRF	250	RX	2008 - 2020	RR
CRF	250	X	2004 - 2021	RR
CRF	250	XLR (Road Legal)	2014 - 2020	RR
CRF	450	R (260mm F/Disc)	2015 - 2021	RR
CRF	450	R2/R3/R4/R5/R6/R7	2002 - 2007	RR
CRF	450	R8/R9/RA/RB/RC/RD/RE	2008 - 2018	RR
CRF	450	RE (Limited Road Use)	2016 - 2016	RR
CRF	450	RX (18" Rear Wheel)	2017 - 2021	RR
CRF	450	X	2008 - 2021	RR
CRF	450	X5/X6/X7	2005 - 2007	RR
CRF	450	XLR (Road Legal)	2014 - 2016	RR

HONDA DALLARA

CR	125	Motard	2004 - 2006	RR
CRE	125	R Enduro	2002 - 2003	RR
CRE	125	R Enduro	2004 - 2007	RR
CRE	125	R Supermotard	2002 - 2006	RR
XR	250	SM	2004 - 2004	RR
XR	400	/440 R	2004 - 2004	RR
XR	400	/440 SM	2004 - 2004	RR

MEGELLI

	125	M	2008 - 2010	RR
	125	R (Sportbike)	2008 - 2010	RR
	125	S (Naked Sport Bike)	2008 - 2010	RR

PUZEY

MTD	300	(4T/4V) (Motard model)	2011 - 2012	RR
MX	300	(4T/4V) (Enduro model)	2011 - 2012	RR

TM

SM	85		2018 - 2019	FL	RR

EQUIVALENTS OEM

06435 KZ4 J41	06435 KRN 711	06435 KRN 712	K01306075

PART NUMBER

177

AD	S3	S33 RACING	GP5	GP6	GP7	GPR

1 set = 4 pcs

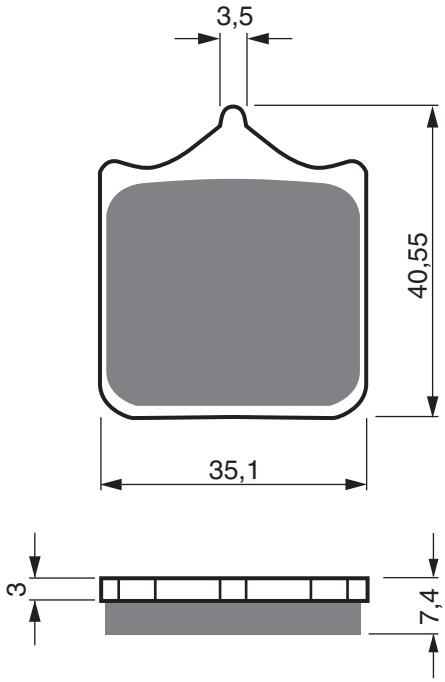

APRILIA

	1 000	Tuono R Factory (Radial Caliper / 4 pad type)	2006 - 2010	FL	FR
RSV	1 000	Mille	2001 - 2002	FL	FR
RSV	1 000	Mille (Radial Caliper)	2003 - 2003	FL	FR
RSV	1 000	Mille R	2001 - 2002	FL	FR
RSV	1 000	Mille R (Radial Caliper)	2003 - 2003	FL	FR
RSV	1 000	R	2004 - 2008	FL	FR
RSV	1 000	R Factory	2004 - 2008	FL	FR
RSV	1 000	R Factory (Radial Caliper / 4pad)	2004 - 2008	FL	FR
RSV	1 000	R Racing (Radial Caliper/4pad)	2004 - 2008	FL	FR

BENELLI

	500	Leoncino	2017 - 2018	FL	
	500	Leoncino Trail	2017 - 2018	FL	
TRK	502		2017 - 2020	FL	
BX	570	Motard	2008 - 2010	FL	
BN	600	GT	2014 - 2015	FL	FR
BN	600	GT	2016 - 2017	FL	FR
BN	600	i	2014 - 2015	FL	FR
BN	600	i	2016 - 2017	FL	FR
	752	S	2018 - 2018	FL	
	899	Cafe Racer	2010 - 2012	FL	FR
	899	Century Racer	2011 - 2012	FL	FR
	899	Tornado LE/Tre Novecento	2003 - 2005	FL	FR
TNT	1 130	Cafe Racer	2006 - 2012	FL	FR
TNT	1 130	Century Racer	2011 - 2012	FL	FR
TNT	1 130	Sport/Sport Evo	2004 - 2009	FL	FR
TNT	1 130	Titanium	2006 - 2008	FL	FR
TNT	1 130	Tornado Naked Tre TR160	2009 - 2012	FL	FR
TRE	1 130	Tornado (Radial Caliper)	2006 - 2010	FL	FR

BIMOTA

		Delirio	2006 - 2006	FL	FR
DB5		(All Models)	2006 - 2007	FL	FR
DB5R			2006 - 2006	FL	FR
DB6	992	Delirio (Ducati engine)	2007 - 2007	FL	FR
SB8K	992	Santamonica (Suzuki engine)	2007 - 2007	FL	FR
DB10	1 078	Motard	2012 - 2013	FL	FR
DB5	1 078	Desiderio	2012 - 2014	FL	FR
DB5R	1 078	R/S	2008 - 2009	FL	FR
DB6	1 078		2008 - 2009	FL	FR
DB6	1 078	/R	2008 - 2009	FL	FR
DB6	1 078	Delirio	2012 - 2013	FL	FR
DB7	1 098		2008 - 2008	FL	FR
DB6	1 100		2008 - 2008	FL	FR
DB6R	1 100	Delirio	2008 - 2008	FL	FR
DB9	1 198	Brivido S (with BCA 6 piston caliper)	2012 - 2014	FL	FR
DB12B	1 200	Tourist	2012 - 2013	FL	FR
DB9	1 200	Brivido	2012 - 2014	FL	FR

BREMBO RACING CALIPERS

		20 7850 11/21 - 4 Piston P4/34 @ 65mm Spacing (Wire clip pad retention only)		FL	
		20 8343 11/21 or 35/45 - 4 Piston P4/34 @ 100mm Spacing (Wire clip pad retention only)		FL	
		XA 32950 P4/34 Motard Avial Mount 65mm 4 pad set		FL	

CAGIVA

	500	Mito (4T)	2008 - 2008	FL	FR
	1 000	Raptor X3	2003 - 2004	FL	FR

DERBI

	659	Mulhacen	2006 - 2008	FL	

DUCATI

	748	R (4 pad Caliper)	2001 - 2002	FL	FR
	749	(Monoposto/Biposto)	2003 - 2006	FL	FR
	749	Dark (Monoposto/Biposto)	2004 - 2006	FL	FR
	749	R (Radial Caliper)	2004 - 2006	FL	FR
	749	S (Monoposto/Biposto)	2003 - 2006	FL	FR
	996	R	2001 - 2001	FL	FR
	998	R	2002 - 2002	FL	FR
	998	S (4pad Caliper)	2002 - 2004	FL	FR
	998	S Baylis/Bostrom	2002 - 2002	FL	FR
S4R	998	Monster Testastretta (Radial 4 pad caliper)	2007 - 2008	FL	FR
S4RS	998	(Tricolore/ Monster Testastretta) Radial 4 pad caliper	2008 - 2008	FL	FR
S4RS	998	Monster (Radial 4 pad Caliper)	2006 - 2006	FL	FR
S4RS	998	Monster Testastretta (Radial 4 pad caliper)	2007 - 2007	FL	FR
	999	(Std Mount Caliper)	2003 - 2006	FL	FR
	999	R (Radial mount caliper)	2003 - 2006	FL	FR
	999	R Fila (Radial Mount Caliper)	2003 - 2003	FL	FR
	999	R Xerox	2006 - 2006	FL	FR
	999	S (Radial Caliper) (Monoposto/Biposto)	2005 - 2006	FL	FR
	999	S (Std Mount Caliper) (Monoposto/Biposto)	2003 - 2004	FL	FR

GENERIC

GRS	600		2013 - 2014	FL	

AD	K5	S3	S33 RACING	GP5	GP6	GP7	GPR

1 set = 4 pcs

PART NUMBER

177

HUSQVARNA

SMR	449		2011 - 2011	FL	
SM	450	R (Radical Caliper)	2007 - 2010	FL	
SM	450	RR	2008 - 2010	FL	
SMR	450	RR (Rad.cal.)	2006 - 2007	FL	
SM	510	R (Radial Caliper)	2006 - 2009	FL	
SMR	511		2011 - 2013	FL	
SM	530	RR	2008 - 2010	FL	
SM	610	ie	2007 - 2009	FL	
SM	610	S (Radial Caliper)	2006 - 2006	FL	
SMR	630	(4T)	2010 - 2012	FL	
STR	650	CRC	2007 - 2007	FL	
	701	Supermoto	2016 - 2020	FL	

HYOSUNG

RX	450	SM	2008 - 2008	FL	

KTM

	690	Duke	2008 - 2011	FL	
	690	Duke R (5 Spoke Cast Wheels)	2010 - 2011	FL	
SM	690	Prestige	2007 - 2007	FL	
SMC	690	R	2012 - 2013	FL	
SMC	690	R (ABS)	2014 - 2020	FL	
SMR	690	(4 Pad Type Caliper/Cast Wheel)	2007 - 2011	FL	FR
	950	Duke	2003 - 2003	FL	FR
	950	Supermoto	2005 - 2007	FL	FR
	990	Superduke	2005 - 2011	FL	FR
	990	Superduke R	2007 - 2013	FL	FR
SM-R	990	Supermoto R	2008 - 2009	FL	FR
SM-T	990	Supermoto T	2009 - 2013	FL	FR

LAVERDA

SFC	1 000		2003 - 2004	FL	FR
SFC	1 000	(Rad.cal.)	2004 - 2004	FL	FR

MONDIAL

EVO			2004 - 2004	FL	FR
	1 000	Evo (Rad.cal)	2004 - 2004	FL	FR
	1 000	Piega	2003 - 2004	FL	FR
	1 000	RZ Nuda	2004 - 2004	FL	FR
	1 000	Starfighter (Rad.cal)	2004 - 2004	FL	FR

MOTO-GUZZI

		Grisso	2004 - 2004	FL	FR
MGS-01	1 000	Corsa	2004 - 2007	FL	FR
	1 100	Fionda	2005 - 2005	FL	FR

MOTO-MORINI

	1 200	Granferro	2010 - 2013	FL	FR
	1 200	Rebello Giubileo	2012 - 2013	FL	FR

MOTUS

MST-01			2012 - 2013	FL	FR
MTSR-01			2012 - 2013	FL	FR

MV AGUSTA

	910	Brutale R (Brembo Calipers/4 pads)	2006 - 2008	FL	FR
F4	1 000	R	2006 - 2007	FL	FR
F4	1 000	R 312 1+1	2007 - 2008	FL	FR
F4	1 000	R 312 (Brembo 4 piston caliper up to VIN 008064)	2007 - 2007	FL	FR
F4	1 078	CC (Claudio Castigioni)	2007 - 2008	FL	FR

NORTON

	961	Commander SF	2010 - 2015	FL	FR
	961	Commando Cafe Racer	2010 - 2020	FL	FR
	961	Commando SE	2010 - 2011	FL	FR

PETRONAS

FP1			2005 - 2005	FL	FR

SHERCO

SM	450	4.5 iF Black Panther	2008 - 2012	FL	
SM	450	4.5i F Supermoto	2004 - 2007	FL	
SM	510	5.1 iF Black Panther	2008 - 2012	FL	

SWM

	440	Gran Milano (4T)	2016 - 2018	FL	
	440	Gran Milano Boggi SE	2018 - 2018	FL	
SM	450	R (4T)	2015 - 2018	FL	
	500	Ace of Spades	2018 - 2020	FL	
	500	Gran Milano Outlaw	2018 - 2020	FL	
SM	500	R	2016 - 2020	FL	
SM	650	R	2016 - 2018	FL	

TM

SMM	125	(2T)	2008 - 2015	FL	
SMR	125	(2T)	2015 - 2015	FL	
SMX	125	(2T)	2015 - 2015	FL	
SMM	250	(2T)	2015 - 2015	FL	
SMM	250	F (4T)	2010 - 2010	FL	
SMM	250	F (4T)	2010 - 2015	FL	
SMR	250	(2T)	2015 - 2015	FL	
SMR	250	F(4T)	2010 - 2015	FL	
SMX	250	(2T)	2015 - 2015	FL	
SMM	300	(2T)	2015 - 2015	FL	
SMR	300	(2T)	2015 - 2015	FL	
SMX	300	(2T)	2015 - 2015	FL	
SMM	450	F	2011 - 2015	FL	
SMM	450	F Black Dream E-S	2008 - 2008	FL	
SMR	450	F(4T)	2010 - 2015	FL	
SMX	450	F	2005 - 2015	FL	
SMM	530	F Black Dream (Rim brake)	2004 - 2010	FL	
SMM	530	Fi	2015 - 2015	FL	
SMR	530	F (4T)	2010 - 2015	FL	
SMR	530	Fi (4T)	2010 - 2015	FL	
SMX	660	F	2005 - 2010	FL	

TRIUMPH

	1 050	Speed Triple (4 Brembo F/Caliper/220 R/Disc/ABS) - To VIN 461331	2007 - 2011	FL	FR
	1 050	Speed Triple (4 Brembo F/Caliper/220mm R/Disc/Non ABS) - To VIN 461331	2007 - 2011	FL	FR

VOXAN

		Charade Racing	2006 - 2006	FL	FR
GTV	1 200		2008 - 2008	FL	FR

EQUIVALENTS OEM

613 403 01A	613 403 91A	8223972	R 180 100 12600	610 13 030 000	8000A2040	69177
862486	862697	8000A7417	8000A6416	610 13 030 100	1679	AP8133592
107 A48647	07BB0510	07BB05RC	M478Z04	45120 S01 0000	T2020715	

PART NUMBER

178

AD | S3 | S33 RACING

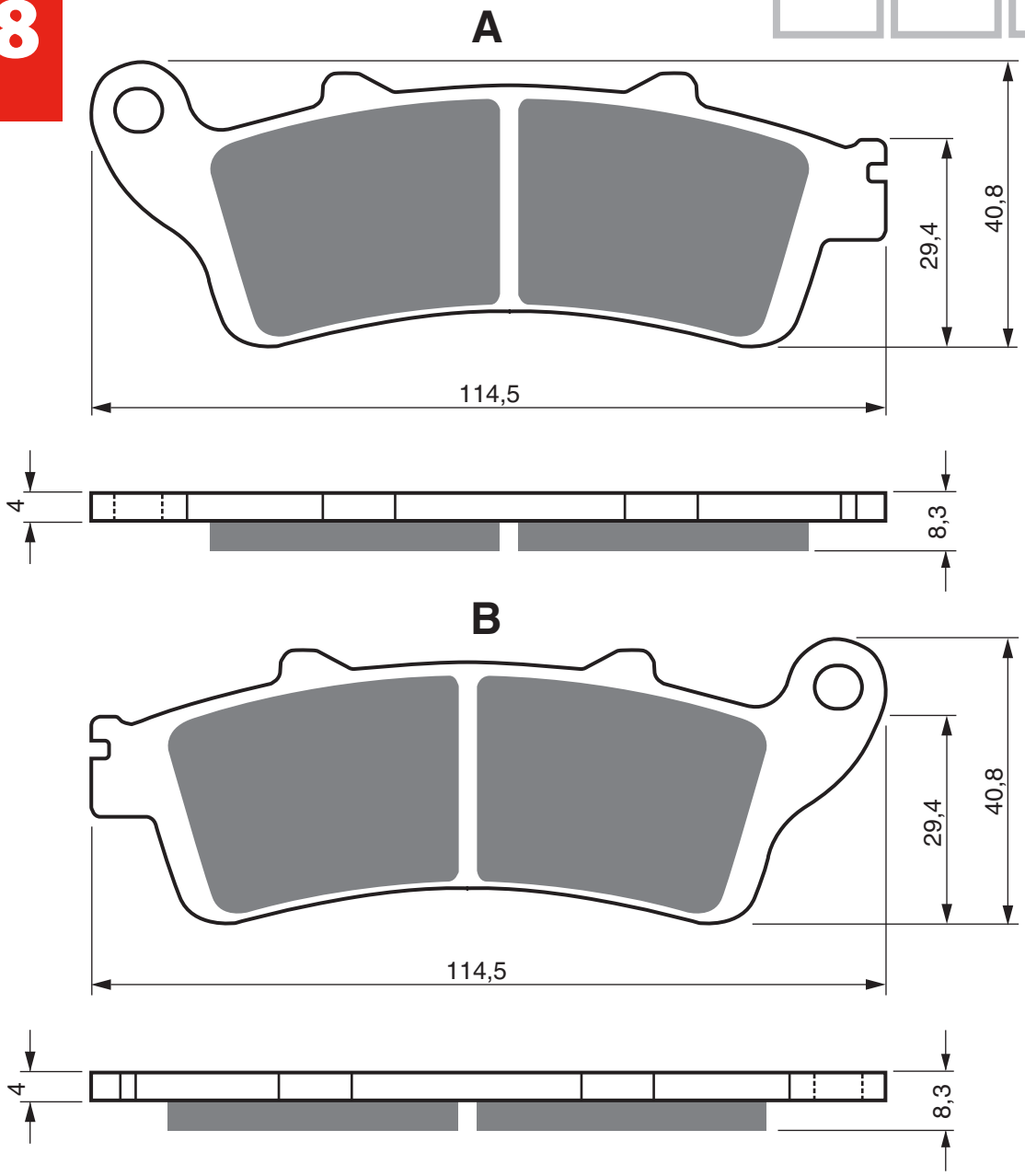

HONDA

FJS	400	A9/D9	2009 - 2009	FL		
NT	650	V2/V3/V4/V5	2002 - 2005	FL	FR	RR
NT	700	V6/V7/V8/VA Deauville	2006 - 2013	RR		
NT	700	VA6/VA7/VA8/VAA Deauville (ABS)	2007 - 2013	RR		
VFR	800	6/8/9	2006 - 2009	RR		
VFR	800	A6/A8/A9	2006 - 2013	RR		
VFR	800	FiW/FiX/FiY/Fi1/2/3/4/5/A2/A3/A4/A5	1998 - 2005	FL	FR	RR
XL	1 000	V3/V4/V5/V6 Varadero (Non ABS)	2003 - 2006	FL	FR	RR
XL	1 000	V7/V8/V9 Varadero (Non ABS Model)	2007 - 2011	RR		
XL	1 000	VA4/VA5/VA6/VA7/VA8/VA9/VAA/VAB Varadero (ABS Model)	2004 - 2011	RR		
XL	1 000	VX/VY/V1/V2 Varadero (Non ABS Model)	1999 - 2002	FL	FR	RR
CB	1 100	SFY/SF1 "XII"	2000 - 2003	FL	FR	RR
CBR	1 100	XXV/XXW/XXX/XXY/XX1-XX6 Blackbird	1997 - 2008	FL	FR	RR
ST	1 100	AT/AV/AW/AX/AY/A1/A2 Pan European (ABS)	1996 - 2002	FL	FR	RR
CTX	1 300	AE	2014 - 2017	RR		
ST	1 300	2/3/4/6 Pan European (Non ABS)	2002 - 2007	FL	FR	RR
ST	1 300	8/9 Pan European (Non ABS)	2008 - 2009	RR		
ST	1 300	A2/A3/A4/A6 Pan European (ABS Model)	2002 - 2007	FL	FR	RR
ST	1 300	A8/A9/AA-AE Pan European (ABS)	2008 - 2017	RR		
F6B	1 800	Goldwing (GLF6BA)	2013 - 2017	FL	FR	
GL	1 800	6/7/8/9/A/C/D/E/F/G/H Goldwing	2006 - 2017	FL	FR	
GL	1 800	A1/A2/A3/A4/A5 "Goldwing"	2001 - 2005	FL	FR	
VTX	1 800	C2/C3/C4/C15/C16/C17	2002 - 2008	FL	FR	RR

VICTORY

	1 731	Arlen Ness Victory Vision	2010 - 2012	FL	FR
	1 731	Vision 8-Ball	2010 - 2012	FL	FR
	1 731	Vision Street	2008 - 2009	FL	FR
	1 731	Vision Tour (all models)	2008 - 2015	FL	FR

EQUIVALENTS OEM

06435 MAJ G41	06435 MAT 006	06435 MCC 006	06435 MCH 006	06435 MBL D01	06435 MCS G01	06455 MAJ G41
06455 MAT 006	06455 MAT E21	06455 MCA 006	06455 MCC 006	06455 MCH 006	06455 MBG 005	06455 MBT 611
06455 MCS G01	06455 MCS G02	06455 MCT 691	06456 MCA 006	06456 MCC 006	06435 MCS G03	

AD	K1	K5	S3

PART NUMBER

179

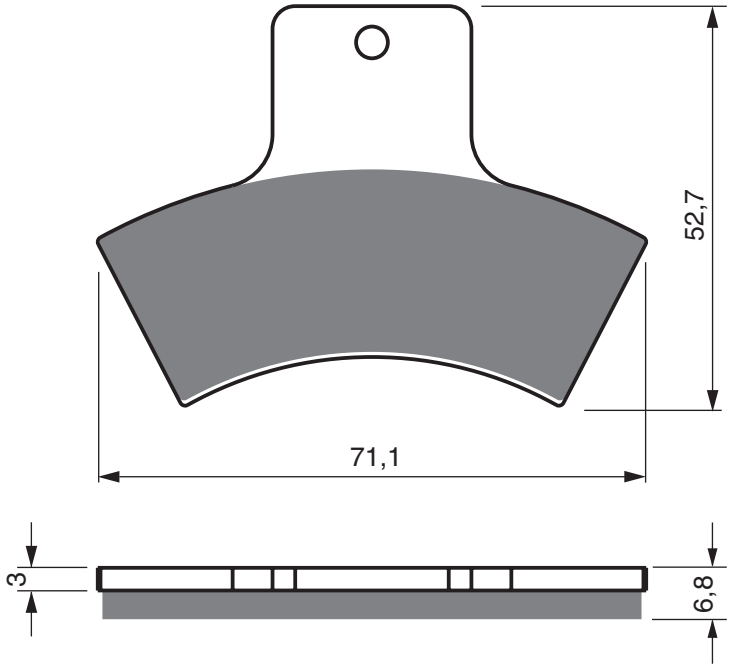

LINHAI

	300	Muddy (4x4)	2007 - 2009	PB

POLARIS

	250	Trail Blazer	1999 - 2000	RR
	250	Trail Blazer (Freedom)	2001 - 2004	RR
	250	Xplorer 4x4	2000 - 2000	RR
	325	Magnum 2x4/4x4	2000 - 2000	RR
	325	Magnum 2x4/4x4 Moose	2001 - 2001	RR
	325	Trail Boss	2000 - 2002	RR
	325	Xpedition	2000 - 2000	RR
	330	Trail Boss	2003 - 2004	RR
	335	Sportsman 4x4	1999 - 2000	RR
	400	Scrambler (2x4/4x4)	2000 - 2000	RR
	400	Scrambler 2x4	2002 - 2002	RR
	400	Scrambler 4x4	1999 - 1999	RR
	400	Sport	1999 - 2000	RR
	400	Sportsman	2001 - 2002	RR
	400	Trail Blazer	2003 - 2003	RR
	400	Xplorer 4x4	2001 - 2002	RR
	400	Xplorer L 4x4	1999 - 2000	RR
	425	Xpedition 4x4	2000 - 2000	RR
	455	Diesel	2001 - 2001	RR
	455	Diesel EBS 4x4	1999 - 2000	RR
	500	Magnum	2001 - 2001	RR
	500	Magnum 4x4	2000 - 2001	RR
	500	Scrambler 2x4	2001 - 2002	RR
	500	Scrambler 4x4	1998 - 2004	RR
	500	Sportsman/Worker 4x4 EBS/500 RSE	1998 - 2002	RR

QUADZILLA

CVT	150	E	2010 - 2011	PB	
	300	E 4x4 (Auto)	2006 - 2006	RL	RR
	300	Quadzilla Utility	2004 - 2006	RR	
CUV	300	E 4x4 Side x Side	2008 - 2009	RR	
QZ	300	E 4x4		RR	
SUV	300	E (Auto)	2006 - 2006	RR	
SUV	300	E (Manual)	2006 - 2007	RR	
QZ	320	E 4x4	2009 - 2009	RR	
	400	(4x4)	2006 - 2007	RR	

EQUIVALENTS OEM

1910339	1930860	2201093	2201189	2201399	2202411	2202412

PART NUMBER

180

AD	K5	S3

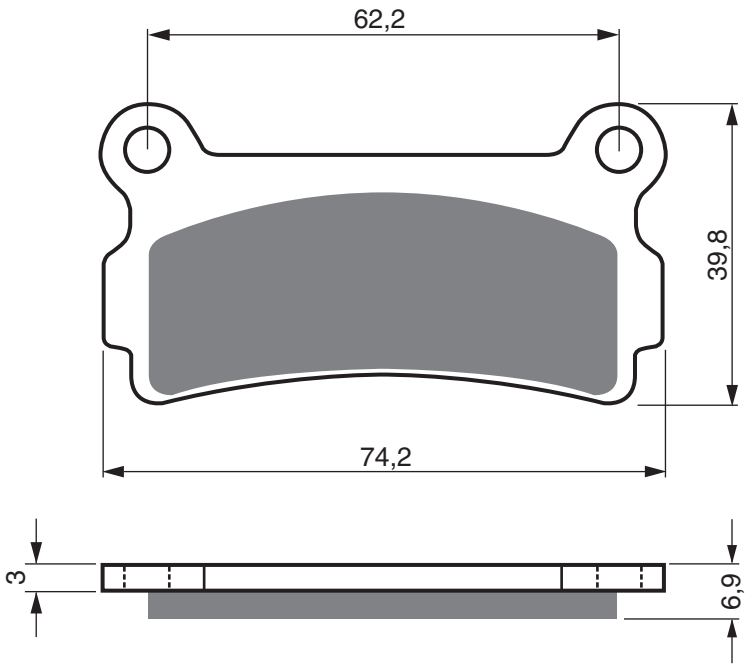

BETA

	125	Trial Evo (2T) MY20	2020 - 2020	FL
	200	Trial Evo (2T) MY20	2020 - 2020	FL
	250	Trial Evo (2T) MY20 Inc GB	2020 - 2020	FL
	260	Super Trial ST	1994 - 1994	RR
	260	Synt	1992 - 1992	RR
	260	Zero	1992 - 1992	RR
TR34	260		1989 - 1991	RR
	300	Trial Evo (2T) MY20 Inc GB and SS	2020 - 2020	FL

EQUIVALENTS OEM

N/A

AD | S3 | S33 RACING

PART NUMBER

181

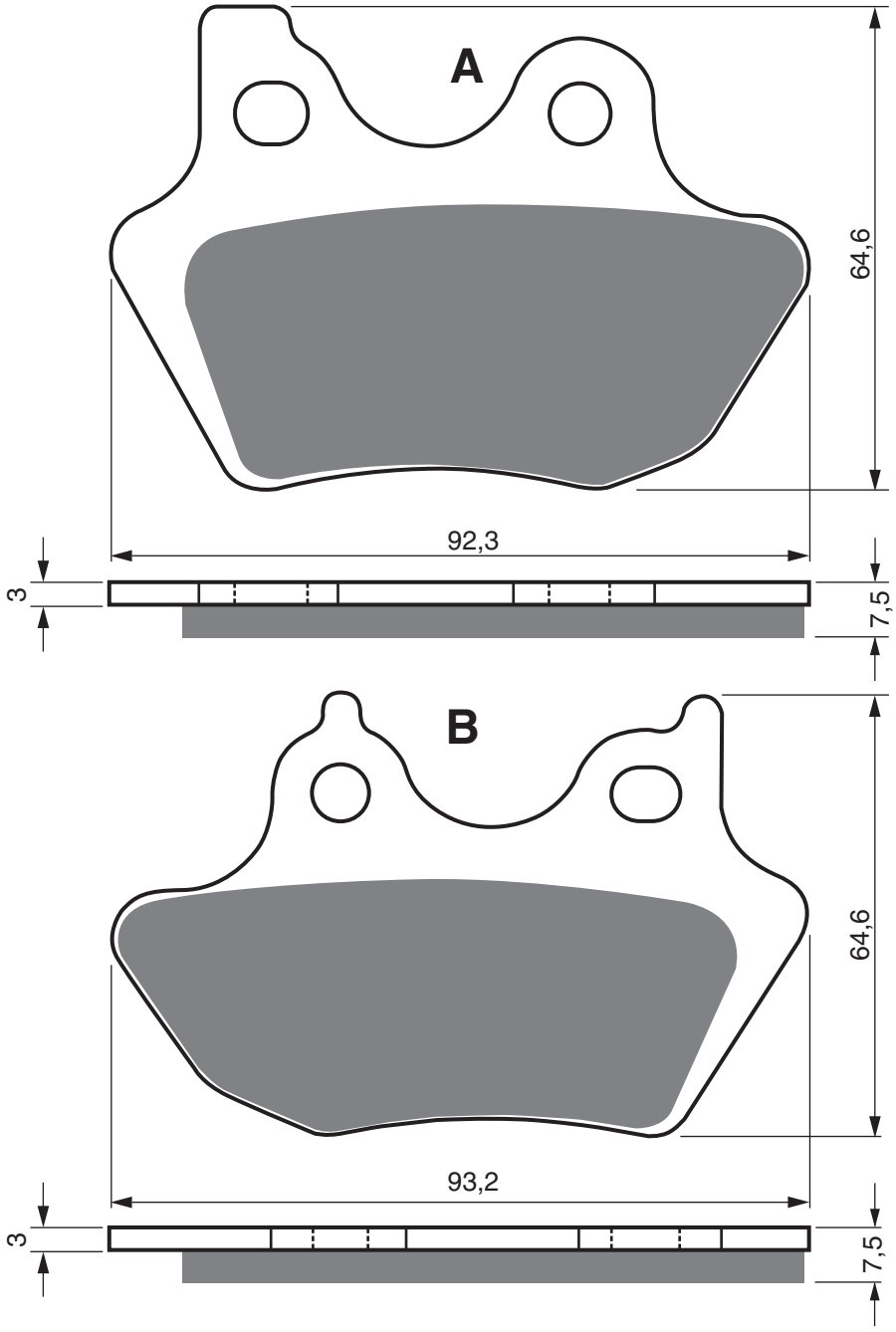

HARLEY DAVIDSON

		Most Models (Check Application listings for details)	2003 - 2011	FL	RR	
VRSCA/ VRSCB		V-Rod (Hayes Caliper)	2002 - 2005	FL	FR	RR
XL	883	R 100th Anniversary Edition	2003 - 2003	FL	FR	RR
XL	883	Sportster Custom	1988 - 1999	FL	RL	
XL53c	883	Sportster Custom	2000 - 2003	FL	RR	
XLH	883	r Sportster Flat Track	2000 - 2003	FL	RR	
XLH	883	Sportster	2000 - 2003	FL	RL	RR
XLH	883	Sportster Hugger	2000 - 2003	FL	RL	RR
VRSCB	1 130	V-Rod	2004 - 2005	FL	FR	RR
XL	1 200	C Sportster Custom	2000 - 2003	FL	RR	
XL	1 200	S Sportster Sport	2000 - 2003	FL	FR	RR
FLHR	1 450	Road King	2000 - 2007	FL	FR	RR
FLHRCi	1 450	Road King Classic	2000 - 2007	FL	FR	RR
FLHRI	1 450	Road King	2000 - 2004	FL	FR	RR
FLHRSI	1 450	Road King Custom	2004 - 2004	FL	RR	
FLHT	1 450	Electra Glide Standard	2000 - 2004	FL	FR	RR
FLHTC	1 450	Electra Glide Classic	2000 - 2004	FL	FR	RR
FLHTCI	1 450	Electra Glide Classic	2000 - 2004	FL	FR	RR
FLHTCUI	1 450	Ultra Classic Electra Glide	2000 - 2004	FL	FR	RR
FLSTC	1 450	Heritage Softtail Classic	2000 - 2004	FL	RR	
FLSTF	1 450	Fat Boy	2000 - 2004	FL	RR	
FLSTS	1 450	Heritage Springer	2000 - 2003	RR		

PART NUMBER

181

AD | S3 | S33 RACING

FLSTSCi	1 450	Springer Classic	2005 - 2005	RR		
FLTR	1 450	Road Glide	2000 - 2004	FL	FR	RR
FLTRI	1 450	Road Glide	2000 - 2004	FL	FR	RR
FXD	1 450	Dyna Super Glide	2000 - 2003	FL	RR	
FXDi	1 450	Super Glide	2005 - 2005	FL	RR	
FXDi	1 450	Super Glide Sport	2005 - 2005	FL	RR	
FXDL	1 450	Dyna Low Rider	2000 - 2003	FL	FR	RR
FXDLi	1 450	Low Rider	2004 - 2005	FL	RR	
FXDS	1 450	Dyna Convertible	2000 - 2002	FL	FR	RR
FXDWG	1 450	Dyna Wide Glide	2000 - 2003	FL	RR	
FXDX	1 450	Dyna Super Glide Sport	2000 - 2004	FL	FR	RR
FXST	1 450	Softail Standard	2000 - 2005	FL	RR	
FXSTB	1 450	Night Train	2000 - 2004	FL	RL	RR
FXSTD	1 450	Softtail Deuce	2000 - 2004	FL	RR	
FXSTS	1 450	Springer Softtail	2000 - 2004	RR		
FLHRC	1 584	Road King Classic	2007 - 2007	FL	FR	
FLHRS	1 584	Road King Custom	2007 - 2007	FL	FR	
FLHT	1 584	Electra Glide Standard	2007 - 2007	FL	FR	
FLHTC	1 584	Electra Glide Classic	2007 - 2007	FL	FR	
FLHX	1 584	Street Glide	2006 - 2007	FL	FR	
FLSTC	1 584	Heritage Softail Classic	2007 - 2007	FL	RR	
FLSTF	1 584	Fat Boy	2007 - 2007	FL	FR	
FLSTN	1 584	Softail Deluxe	2005 - 2007	FL	FR	RR
FXDBi	1 584	Dyna Street Bob	2006 - 2007	FL	FR	RR
FXDC	1 584	Dyna Super Glide Custom	2005 - 2005	FL	FR	RR
FXDL	1 584	Dyna Low Rider	2006 - 2006	FL	FR	RR
FXST	1 584	Softail Standard	2006 - 2007	FL	FR	
FXSTB	1 584	Night Train Softail	2006 - 2007	FL	FR	
FXSTC	1 584	Softail Custom	2007 - 2007	FL	FR	
FXSTD	1 584	Softail Deuce	2007 - 2007	FL	FR	
FXWG	1 584	Dyna Wide Glide	2007 - 2007	FL	FR	

EQUIVALENTS OEM

44082 00C	44082 00D

AD	K1	K5	S3	S33 RACING

PART NUMBER

182

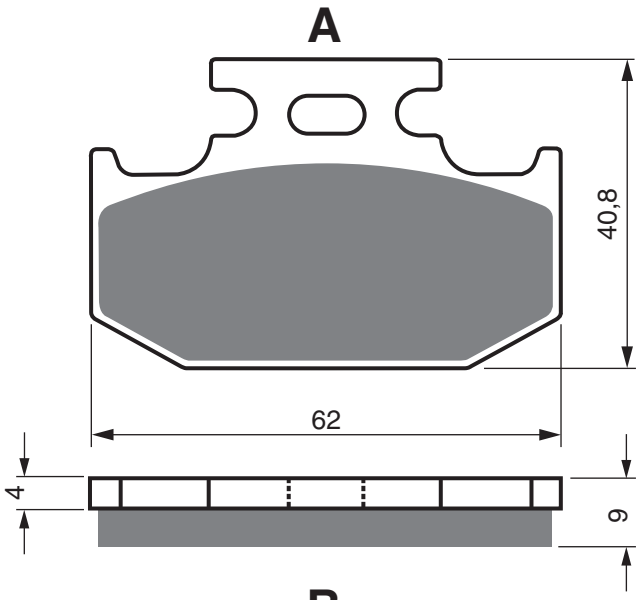

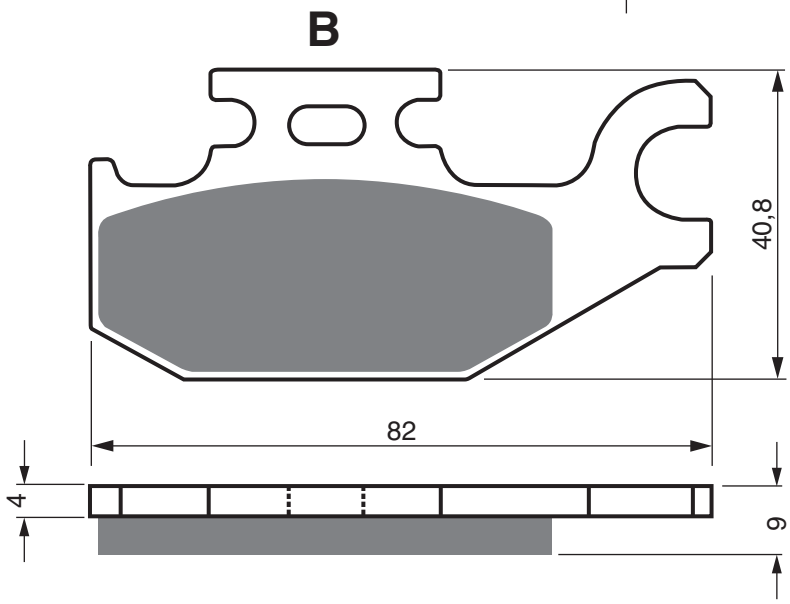

BOMBARDIER

	330	Outlander	2004 - 2004	FL		
	400	Outlander (4x4)	2003 - 2003	FL		
	500	Quest (all models)	2002 - 2002	FL		
	500	Traxter (4x4)	2001 - 2001	FL	RL	RR
	500	Traxter Max	2003 - 2005	FL		
	650	Outlander 4x4	2006 - 2006	FL	RR	
	650	Quest (all models)	2002 - 2002	FL		
DS	650		2000 - 2002	FL	RR	

CAN-AM

200	Rally (4A7A/B/C/D/E/F)	2007 - 2007	RR	
400	Outlander (XT 4x4) (2E7A/B/C/D/E/F)	2007 - 2014	FL	RR
400	Outlander EFi, STD (International only)	2015 - 2015	FL	RR
400	Outlander Max (XT 4x4)(2G7A/B/C/D/E)	2007 - 2013	FL	RR
400	Outlander (4x4 STD) (2D7A/B/C/D/E/F/G/H)	2007 - 2014	FL	RR
500	Outlander (STD 4x4) (2T7A/B/C/D)	2007 - 2012	FL	RR
500	Outlander (XT 4x4)(2U7A/B/C/D)	2007 - 2012	FL	RR
500	Outlander Max (STD 4x4)(2W7A/B/C)	2007 - 2012	FL	RR

PART NUMBER

182

AD | K1 | K5 | S3 | S33 RACING

	500	Outlander Max (XT 4x4)(2X7A/B/C)	2007 - 2010	FL	RR
	500	Renegade (4x4/EFI)	2007 - 2015	FL	RR
	650	Outlander (STD 4x4)(2N7A/B/C/D/E/F/G/H)	2007 - 2012	FL	RR
	650	Outlander (XT 4x4)(2P7A/B/C/D/E/F)	2007 - 2012	FL	RR
	650	Outlander Max (STD 4x4)(2R7A/B/C/D/E/F/G/H/J/K)	2007 - 2012	FL	RR
	650	Outlander Max XT-P	2012 - 2012	FL	RR
DS	650	X (3B7A/B)	2007 - 2007	FL	RR
	800	Outlander (STD 4x4)(2H7A/B/C/D/E/F/G/H)	2007 - 2008	FL	RR
	800	Outlander (XT 4x4)(2J7A/B/C/D/E/F)	2007 - 2008	FL	RR
	800	Outlander Max (LTD 4x4)(2M7A/B/C)	2007 - 2012	FL	RR
	800	Outlander Max (STD 4x4)(2K7A/B/C/D/E/F/G/H/J)	2007 - 2012	FL	RR
	800	Outlander Max (XT 4x4)(2L7A/B/C/D/E/F)	2007 - 2008	FL	RR
	800	Outlander Max R EFI	2009 - 2012	FL	RR
	800	Outlander Max R XT	2009 - 2012	FL	RR
	800	Outlander R XT	2009 - 2010	FL	RR
	800	Outlander R EFi	2009 - 2009	FL	RR
	800	Outlander R Max XT-P	2012 - 2012	FL	RR
	800	Outlander R Xmr	2011 - 2012	FL	RR
	800	Outlander R Xxc	2011 - 2011	FL	RR
	800	Renegade R EFi	2009 - 2011	FL	RR
	800	Renegade R X	2009 - 2010	FL	RR
	800	Renegade R XXC	2011 - 2011	FL	RR
	800	Renegade (4x4/EFI)	2007 - 2008	FL	RR
	800	Renegade X (4x4/EFI)	2008 - 2008	FL	RR
	1 000	Maverick Max	2016 - 2017	RL	
	1 000	Maverick Max STD/XRS/DPS	2015 - 2016	RL	
	1 000	Maverick R STD	2014 - 2015	RL	
	1 000	Maverick R XMR	2014 - 2015	RL	
	1 000	Maverick R XRS	2014 - 2015	RL	
	1 000	Maverick R XRS/DPS	2014 - 2015	RL	
	1 000	Maverick R XXC	2014 - 2015	RL	

CANNONDALE

	440	Blaze	2001 - 2004	FL	RR
	440	Cannibal	2001 - 2004	FL	RR
	440	Glamis	2001 - 2004	FL	RR
	440	Moto	2002 - 2003	FL	RR
	440	Speed	2001 - 2004	FL	RR

JOHN DEERE

	500	/650 Buck EX/EXT	2004 - 2008	FL	
	500	/650 Trail Buck EX/EXT	2004 - 2005	FL	

SUZUKI

UX	125	K8/K9/L0/L1 SIXteen	2008 - 2014	RR	
UX	150	K8/K9/L0/L1 SIXteen	2008 - 2014	RR	
LT-A	500	King Quad	2011 - 2011	FL	
LT-A	700	King Quad	2005 - 2005	FL	

YAMAHA

YFM	400	FAM/FAN	2000 - 2001	RR	
YFM	400	FGW/FGX Grizzly	2007 - 2008	RR	
YFM	400	FWT (Big Bear)	2005 - 2005	RR	
YFM	450	FAR/FAS	2003 - 2004	RR	
YFM	450	FAT/FAHT/FAV (Kodiak)	2005 - 2006	RR	
YFM	450	FXV/FXW/FXX/FXY/FXZ Wolverine	2006 - 2010	RR	

EQUIVALENTS OEM

5GH W0046 00	5GH W0046 10	705 600 014	ID9 W0046 00	705 600 398	705 600 349	69100 03890
69101 03810	1P1 W0046 00					

AD | K5 | S3

PART NUMBER

183

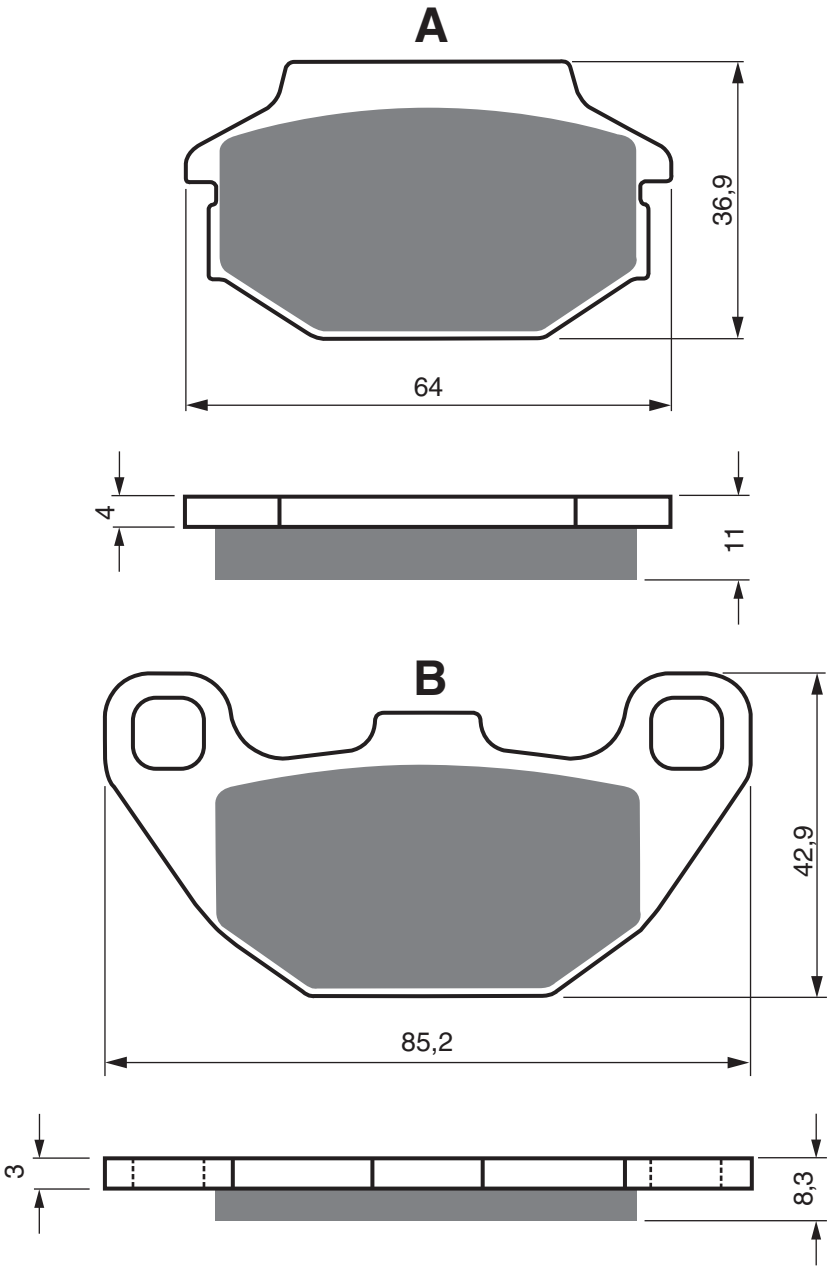

ARCTIC CAT

	50	Auto Youth (4x4)	2008 - 2008	RR
DVX	50	Sport (4T)	2008 - 2008	RR
	90	(Reverse gear model)	2010 - 2014	RR
	90	SE	2009 - 2009	RR
DVX	90		2006 - 2014	RR
DVX	90	(2x4) (4T) Youth (Rear disc model)	2006 - 2006	RR
DVX	90	SE	2009 - 2009	RR
	150	Utility 2x4	2009 - 2014	RR

KAWASAKI

KFX	50	(KSF 50 B7F/B8F/B9S)	2007 - 2009	RR
KFX	50	(KSF 50 BDF/BEF/BFF/BGF/BHF)	2013 - 2017	RR
KFX	90	(KSF 90 A7F/A8F/A9F/AAF/ABF/ACF/ADF/AEF/AFF/AGF/AHF)	2007 - 2017	RR

KYMCO

	50	Agility Carry (4T)	2011 - 2018	FL
	50	Agility R16 (2T/16" wheels)	2008 - 2015	FL
	50	Agility R16 (4T/16" wheels)	2008 - 2015	FL
	50	Like (2T)	2009 - 2009	FL

PART NUMBER

183

AD | K5 | S3

	50	Like (4T)	2009 - 2009	FL
	50	Looker	2007 - 2008	FL
	50	People (2T) (3 bolt fixing)	1999 - 2014	FL
	50	People S (2T) (5 bolt fixing)	2005 - 2015	FL
	50	People S (4T) (B91000) (5 bolt fixing)	2006 - 2020	FL
	50	Super 8 (2T)	2007 - 2015	FL
	50	Super 8 (4T)	2007 - 2020	FL
	50	Super 9 (LC) (SH10DA)	2000 - 2007	RR
DJ	50	S	2012 - 2015	FL
MXER	50		2000 - 2000	RR
MXU	50	Quad (2T)	2005 - 2014	RR
	90	Maxxer	2005 - 2006	RR
KXR	90	/S Mongoose	2004 - 2020	RR
	125	Agility (C20000) (16" wheels)	2008 - 2015	FL
	125	Agility Carry (4T)	2011 - 2015	FL
	125	Agility City	2018 - 2020	FL
	125	Agility City+	2018 - 2020	FL
	125	Agility RS (2T/12" Wheels)	2009 - 2013	FL
	125	i People One	2013 - 2015	FL
	125	Like (D20000)	2009 - 2009	FL
	125	Looker S	2007 - 2008	FL
	125	People	1999 - 2014	FL
	125	People S	2005 - 2006	FL
	125	People S DD	2007 - 2011	FL
	125	People S DD (Rear Disc Model) (5 Bolt Fixing)	2007 - 2020	FL
	125	Super 8 (4T)	2008 - 2015	FL
	125	Super-9	2000 - 2000	RR
DJ	125	S	2012 - 2013	FL
RS	125	Agility (4T-12"wheels/ 5 Spooke)	2009 - 2010	FL
	150	Agility R16 (C30000) (16"wheels)	2008 - 2012	FL
	150	Like (2T)	2009 - 2009	FL
	150	People	1999 - 2004	FL
MXER	150		2003 - 2003	RR
MXER	150	Quad	2002 - 2007	RR
MXU	150	(4T)	2005 - 2020	RR
	200	Agility i R16	2010 - 2015	FL
	200	Like i	2009 - 2009	FL
	200	People S (D11000)	2005 - 2006	FL
	200	People S i DD (D12000) (5 bolt fixing disc)	2007 - 2015	FL
	250	Super-9	2000 - 2000	RR
LAVERDA				
	125	Phoenix	2001 - 2004	RR
	150	Phoenix	2001 - 2004	RR
	200	Phoenix	2001 - 2004	RR
SYM				
	125	Combiz	2011 - 2015	FL
	125	Joyride	2001 - 2007	RR
HD	125	/200	2004 - 2007	FL
SK	125		2003 - 2004	RR
	150	Joyride	2001 - 2006	RR
	200	Joyride	2001 - 2007	RR
GT	500		2004 - 2004	RR

EQUIVALENTS OEM

8900539	45105 KFA6 3050	43082 Y001	45105 LEJ2 305	3304-567	3303-446	3305-139
45105 LDC8 305	45105 KFA6 305	45105 H7C 700A				

AD | S3

PART NUMBER

184

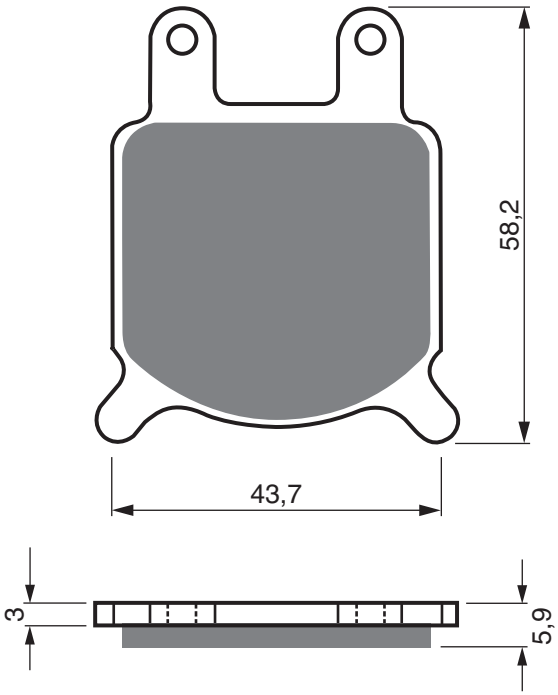

ASPES					
	125	Duma		FL	
FANTIC					
HP1	125	Sport	1986 - 1986	FL	FR
GARELLI					
TSR	125		1983 - 1983	FL	
GILERA					
	80	TG 1/2/3		FL	
	125	GR1		FL	
	125	TG 1/2/3		FL	
	200	T4/T4 C/T4 S		FL	
GMA					
		2 Piston (Small) Caliper Model B (CCI # 09-996)		FL	
JAYBRAKE					
		Early Design 2 Piston		FL	
KREIDLER					
	125	Mustang		FL	

LAVERDA					
LZ	125	Sport (Grimeca Caliper)	1980 - 1982	FL	
MOTO-MORINI					
	125	Monocilindro	1979 - 1979	FL	
	125	Strada		FL	
	250	All Models	1971 - 1971	FL	
	250	Strada		FL	
	350	K2	1984 - 1984	FL	
	350	Sport	1979 - 1979	FL	RR
	350	Sport	1980 - 1981	FL	
	350	Strada		FL	
	500	Strada		FL	
NVT					
	125	/175 Rambler		FL	
ZÜNDAPP					
KS	80	Super (537-01/C801)	1983 - 1983	FL	
KS	125		1979 - 1979	FL	

EQUIVALENTS OEM

310 292	430 09 11

PART NUMBER

185

AD	K1	K5	K5-LX	S3	S33 RACING

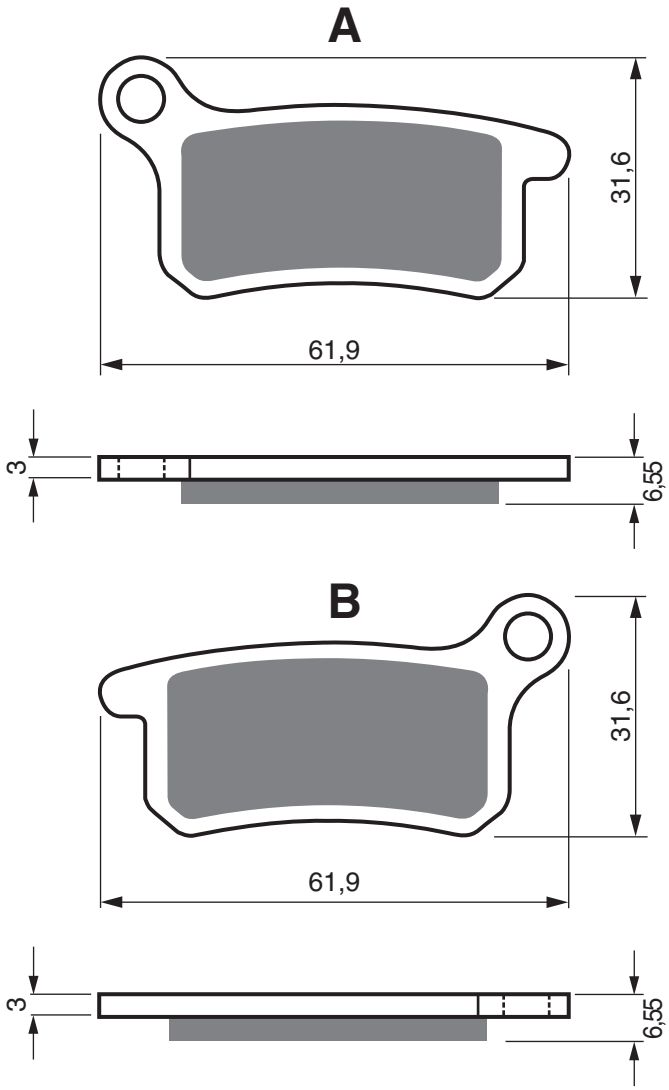

GAS GAS

MC	65	2021 - 2021	FL	RR

HUSQVARNA

CR	65	2011 - 2013	FL	
TC	65	2018 - 2021	FL	RR

KTM

SX	65		2002 - 2003	FL	
SX	65		2004 - 2008	FL	
SX	65		2009 - 2020	FL	RR
SX	85	(17"/14" wheels)	2003 - 2010	FL	RR
SX	85	(17"/14" wheels)	2011 - 2011	FL	
SX	85	(19"/16" wheels)	2003 - 2010	FL	RR
SX	85	(19"/16" wheels)	2011 - 2011	FL	

SWM

MC	650	R	2018 - 2018	FL	

EQUIVALENTS OEM

461 13 030 000	462 13 030 000	470 13 090 000	470 13 090 200	8000H7132

AD | S3

PART NUMBER

186

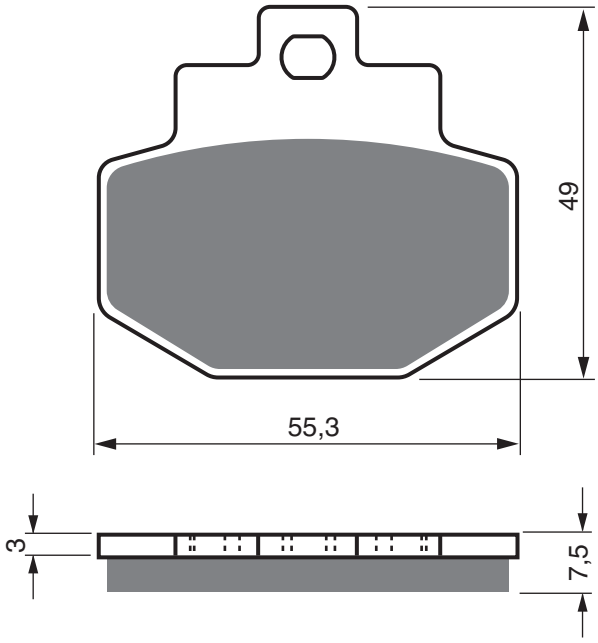

BENELLI				
	125	Adiva	2001 - 2004	RR
	150	Adiva	2001 - 2004	RR
GILERA				
DNA	125		2001 - 2003	RR
DNA	125	(Heng Tong Caliper)	2001 - 2003	RR
VX	125	4T (Grimeca Caliper)	2001 - 2004	RR
VX	125	Runner / ST (4T)	2005 - 2014	RR
VXR	125	Runner 4 Stroke (Grimeca Caliper)	2001 - 2004	RR
DNA	180		2001 - 2003	RR
DNA	180	(Heng Tong Caliper)	2001 - 2003	RR
VX	180	4T (Heng Tong Caliper)	2001 - 2004	RR
VXR	180	Runner 4 Stroke (Grimeca Caliper)	2001 - 2004	RR
VX	200	Runner/ST (4T) (6 bolt rear disc) (Heng Tong Caliper)	2005 - 2011	RR
VXR	200	Runner (4T) (6 Bolt rear disc) (Grimeca Caliper)	2002 - 2004	RR
VXR	200	Runner (4T) (6 Bolt Rear Disc) (Heng Tong Caliper)	2002 - 2004	RR
KYMCO				
GTS	300		2008 - 2008	RR
PIAGGIO VESPA				
GTS		4V ABS/Super Sport/Touring	2018 - 2019	RR
	125	ie Fly (4T/3V) Rear Disc Model	2012 - 2015	RR
	125	New Fly ie (3V)	2012 - 2013	RR
	125	Super Hexagon GTX (11" Wheels) (Grimeca Calipers)	2000 - 2000	RR
	125	Super Hexagon GTX (11" wheels) (Heng Tong Calipers)	2000 - 2000	RR
	125	Super Hexagon GTX (12" wheels)	2001 - 2003	RR
946	125	Special (4T/3V/cc)	2013 - 2015	RR
GT	125	L Granturismo	2003 - 2006	RR
GTS	125		2007 - 2011	RR
GTS	125	Super ie (inc ABS Models)	2009 - 2020	RR
GTS	125	Supersport ie (Inc ABS Models)	2013 - 2015	RR
GTV	125		2007 - 2009	RR
	180	Super Hexagon GTX (11" wheels) (Grimeca Caliper)	2000 - 2000	RR
	180	Super Hexagon GTX (11" wheels) (Heng Tong Calipers)	2000 - 2000	RR
	180	Super Hexagon GTX (12" Wheels)	2001 - 2003	RR
GT	200	L Granturismo	2003 - 2006	RR
	250	Super Hexagon GTX	2000 - 2002	RR
GT 60	250	(Special Anniversary Model)	2006 - 2006	RR
GTS	250	ie/ABS	2005 - 2011	RR
GTV	250	ie	2007 - 2009	RR
GTS	300	ie (ABS Models)	2008 - 2020	RR
GTS	300	ie (Non ABS Models)	2008 - 2015	RR
GTS	300	ie Super (Non ABS Models)	2008 - 2015	RR
GTS	300	ie Super Sport (ABS Models)	2008 - 2018	RR
GTS	300	ie Super Sport (Non ABS Models)	2010 - 2015	RR
GTS	300	ie Touring (ABS Models)	2011 - 2017	RR
GTS	300	ie Touring (Non ABS Models)	2011 - 2016	RR
GTS	300	Super (ABS Models)	2008 - 2020	RR
GTV	300	ie	2010 - 2013	RR

EQUIVALENTS OEM

497002	497348	R44440181A0	647161

PART NUMBER

187

AD	K1	K5	K5-LX	S3	S33 RACING

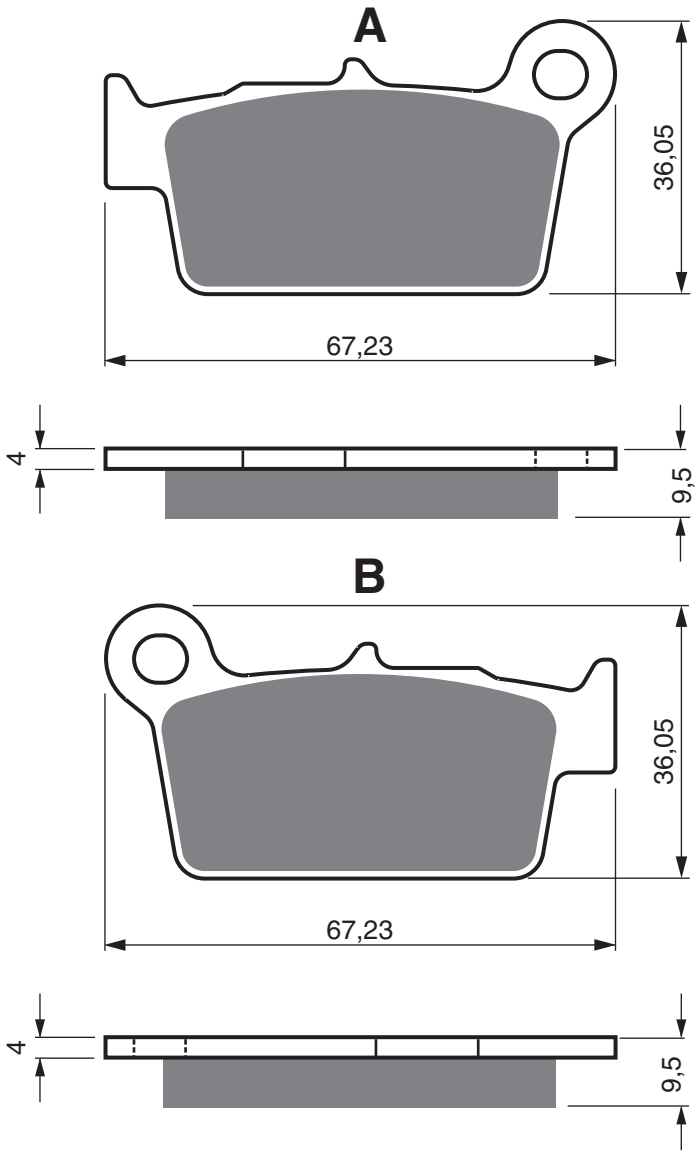

APRILIA

MXV	450		2009 - 2013	RR
RXV	450	Enduro	2006 - 2013	RR
SXV	450	Supermotard	2006 - 2013	RR
RXV	550	Enduro	2006 - 2013	RR
SXV	550	Supermotard	2006 - 2013	RR

BETA

		Minitrial E	2014 - 2014	FL RR

FANTIC

	50	Caballero Regolarita Competizione	2006 - 2009	RR
	50	Caballero Regolarita Competizione Mini	2008 - 2009	RR
	50	Caballero Supersei Competizione	2007 - 2008	RR
	125	Caballero Regolarita Competizione	2007 - 2009	RR
XE	125		2021 - 2021	RR
XX	125		2021 - 2021	RR

GAS GAS

EC	125		2010 - 2015	RR
MX	125		2009 - 2011	RR
MX	125	(MC)	2009 - 2011	RR
EC	200	(2T)	2010 - 2015	RR
EC	200	(2T)	2017 - 2017	RR
EC	200	(Euro 4)	2018 - 2020	RR
EC	200	Ranger	2018 - 2020	RR
EC	250	(2T)	2010 - 2011	RR
EC	250	(2T)	2012 - 2015	RR
EC	250	(Euro 4)	2018 - 2020	RR
EC	250	F (All Models /4T)	2012 - 2015	RR
EC	250	Six Days	2019 - 2019	RR
MX	250		2009 - 2011	RR
MX	250	(MC)	2009 - 2011	RR

AD | K1 | K5 | K5-LX | S3 | S33 RACING

PART NUMBER

187

XC	250	(Euro 4)	2018 - 2020	RR	
EC	300		2010 - 2015	RR	
EC	300	(Euro 4)	2018 - 2020	RR	
EC	300	F (4T)	2013 - 2015	RR	
EC	300	F (All Models /4T)	2013 - 2015	RR	
EC	300	Ranger	2018 - 2020	RR	
XC	300	(Euro 4)	2018 - 2020	RR	
EC	450	F (All Models /4T)	2013 - 2015	RR	
EC	450	Raid	2014 - 2014	RR	
GOLDFREN					
		Rear motocross caliper CP004	2007 -	RR	
KAWASAKI					
KX	250	F	2020 - 2020	RR	
KX	250	F	2021 - 2021	RR	
KX	250	F (KX 250 W9F/XAFB/YBF/YCF/ZDF/ZEF) (4T)	2009 - 2014	RR	
KX	250	F (KX 250N1/N2) (4T)	2004 - 2006	RR	
KX	250	F (T6F/T7F/T8F) (4T)	2006 - 2008	RR	
KX	250	F (ZZF/ZGF/AHF/AJF/AKF)	2015 - 2019	RR	
KX-F	250	DFI	2011 - 2014	RR	
KLX	450	R (A8F/A9F/AAF/ABF/ACF/ADF/AEF/AFF/AGF/AHF/AJF)	2008 - 2018	RR	
KX	450	F	2021 - 2021	RR	
KX	450	F (4T) 270mm Front/250mm Rear Rotor	2019 - 2020	RR	
KX	450	F (D6F/D7F/D8F/E9F/EAF/EBF/FCF/FDF/FEF)	2006 - 2014	RR	
KX	450	F (ZFF/ZGF/AHF/AJF)	2015 - 2018	RR	
KX	450	F Tomac (JKF) (4T) 270mm Front/250mm Rear Rotor	2019 - 2019	RR	
SHERCO					
		Enduro 2.5i F (4T) (inc SE models)	2008 - 2010	RR	
		Enduro 4.5i	2004 - 2010	RR	
		Enduro 5.1 iF	2007 - 2011	RR	
SM		2.5i Supermotard	2008 - 2008	RR	
SM		5.1 iF Supermotard	2007 - 2007	RR	
2.5i	250	Enduro (4T)	2006 - 2009	RR	
SX	250	2.5i Moto Cross	2010 - 2010	RR	
	300	Enduro SE 3.0i (4T)	2010 - 2010	RR	
SE	450	iR Enduro (Nissin Rear Caliper)	2012 - 2012	RR	
SM	450	4.5 iF Black Panther	2008 - 2012	RR	
SM	450	4.5i F Supermoto	2004 - 2007	RR	
SM	450	i	2004 - 2009	RR	
5.1i	510	Enduro (4T)	2006 - 2009	RR	
5.1i	510	Supermotard	2006 - 2009	RR	
SE	510	iR (Nissin Rear Caliper)	2012 - 2012	RR	
SM	510	5.1 iF Black Panther	2008 - 2012	RR	
SUZUKI					
RM-Z	250		2021 - 2021	RR	
RM-Z	250	K4/K5/K6	2004 - 2006	RR	
RM-Z	250	K7/K8/K9	2007 - 2009	RR	
RM-Z	250	L0/L1/L2/L3/L4/L5/L6/L7/L8/L9	2010 - 2020	RR	
RM-Z	450		2020 - 2020	RR	
RM-Z	450		2021 - 2021	RR	
RM-Z	450	K5/K6/K7	2005 - 2007	RR	
RM-Z	450	K8/K9/L0/L1/L2/L3/L4/L5/L6/L7	2008 - 2017	RR	
RM-Z	450	L8/L9	2018 - 2020	RR	
RMX	450	ZL0/ZL2	2010 - 2015	RR	
TM					
MX	85	JR (Small Wheel)	2005 - 2009	RR	
MX	85	(Big Wheel)	2005 - 2009	RR	
MX	85	(Big Wheel)	2010 - 2021	FL	RR
MX	85	JR (Small Wheel)	2010 - 2021	FL	RR
SMX	85	2S	2010 - 2021	FL	RR
MX	100	JNR (Big Wheel)	2019 - 2021	FL	RR
MX	100	JNR (Small Wheel)	2019 - 2021	FL	RR
EN	125	/250/250 F-ES/450 F-ES	2003 - 2004	RR	
EN	125	Enduro (2T)	2005 - 2009	RR	
EN	125	Enduro (2T)	2010 - 2014	RR	
EN	125	Enduro (2T)	2015 - 2015	RR	
EN/MX	125	/144/250/300/450/530 All models	2010 - 2014	RR	
EN/MX	125	/144/250/300/450/530 All models	2015 - 2021	RR	
MX	125	(2T)	2005 - 2009	RR	
MX	125	(2T)	2010 - 2014	RR	
MX	125	(2T)	2015 - 2021	RR	
SMM	125	/530 F-ES	2003 - 2009	RR	
SMR	125	(2T)	2005 - 2011	RR	
SMR	125	(2T)	2012 - 2015	RR	
SMR	125	(2T)	2015 - 2015	RR	
SMR	125	Tsi 306mm OD F-Disc	2019 - 2021	RR	
SMX	125	(2T)	2015 - 2015	RR	
EN	144	Enduro (2T)	2010 - 2014	RR	
EN	144	Enduro (2T)	2015 - 2021	RR	
MX	144	(2T)	2010 - 2014	RR	
MX	144	(2T)	2015 - 2021	RR	
EN	250	(2T)	2005 - 2009	RR	
EN	250	(2T)	2010 - 2014	RR	
EN	250	(2T)	2015 - 2015	RR	
EN	250	F (4T) Enduro	2005 - 2009	RR	
EN	250	Fi (4T) Enduro	2010 - 2014	RR	
EN	250	Fi (4T) Enduro	2015 - 2021	RR	
MX	250	(2T)	2005 - 2008	RR	
MX	250	(2T)	2010 - 2014	RR	
MX	250	(2T)	2015 - 2015	RR	
MX	250	(4T)	2005 - 2009	RR	
MX	250	Fi (4T)	2010 - 2014	RR	
MX	250	Fi (4T)	2015 - 2015	RR	
SMM	250	F (4T)	2010 - 2015	RR	
SMR	250	(2T)	2005 - 2015	RR	
SMR	250	(2T)	2015 - 2015	RR	
SMR	250	F (2T/4T)	2010 - 2015	RR	
SMX	250	(2T)	2015 - 2015	RR	
SMX	250	F	2010 - 2015	RR	
EN	300	Enduro (2T)	2005 - 2009	RR	
EN	300	Enduro (2T)	2010 - 2014	RR	
EN	300	Enduro (2T)	2015 - 2015	RR	
FT	300	(2T)	2019 - 2021	RR	
MX	300	(2T)	2005 - 2009	RR	
MX	300	(2T)	2010 - 2014	RR	
MX	300	(2T)	2015 - 2021	RR	
MX	300	(4T)	2010 - 2021	RR	
SMR	300	(2T)	2005 - 2015	RR	
SMR	300	(2T)	2015 - 2015	RR	
SMR	300	(2T) Tsi ES	2019 - 2021	RR	
SMX	300	(2T)	2015 - 2015	RR	
SMX	300	(2T) 2S ES	2019 - 2021	RR	
EN	450	/530 Supermoto wit 320mm Disc	2005 - 2009	RR	
EN	450	F	2004 - 2004	RR	
EN	450	Fi	2005 - 2009	RR	
EN	450	Fi (4T) Enduro	2010 - 2014	RR	
EN	450	Fi (4T) Enduro	2015 - 2015	RR	
FT	450	Fi ES (4T)	2020 - 2021	RR	
MX	450	Fi (4T)	2005 - 2009	RR	
MX	450	Fi (4T)	2010 - 2014	RR	
MX	450	Fi (4T)	2015 - 2021	RR	
SMM	450	F	2011 - 2015	RR	
SMR	450	FES	2005 - 2009	RR	
SMR	450	Fi ES (4T)	2010 - 2021	RR	
SMX	450	F	2005 - 2015	RR	
EN	530	F (4T) Enduro	2011 - 2014	RR	
EN	530	F (4T) Enduro	2015 - 2021	RR	

PART NUMBER

187

AD	K1	K5	K5-LX	S3	S33 RACING

EN	530	F Enduro	2005 - 2009	RR
FT	530	Fi ES (4T)	2019 - 2021	RR
MX	530	F	2005 - 2009	RR
MX	530	F	2010 - 2014	RR
MX	530	F	2015 - 2015	RR
SMR	530	F (4T)	2010 - 2015	RR
SMR	530	FES	2005 - 2009	RR
SMR	530	Fi	2010 - 2015	RR
SMR	530	Fi (4T)	2010 - 2015	RR
SMR	530	Fi ES (4T)	2019 - 2021	RR
SMX	530	F	2005 - 2015	RR
SMX	660	F	2005 - 2010	RR
W.K.BIKES				
	125	Trail	2011 - 2015	RR
YAMAHA				
YZ	125	R/S/T/V/W (2T)	2003 - 2007	RR
YZ	125	X/Y/Z/A/B/D/E/F/G/H/J/K (2T)	2008 - 2021	RR
WR	250	FF/FG (4T/Reverse Cylinder)	2015 - 2016	RR
WR	250	FH/FJ/FK (4T/Reverse Cylinder)	2017 - 2021	RR
WR	250	FR/FS (4T)	2003 - 2004	RR
WR	250	FT/FV/FW/FX/FY/FZ/FA/FB/FD (4T)	2005 - 2014	RR
WR	250	R (32D1/3)	2008 - 2020	RR
WR	250	XX/XY (32D2-)	2008 - 2015	RR
YZ	250	F	2021 - 2021	RR
YZ	250	FG/FH/FJ (270mm Disc)	2016 - 2021	RR
YZ	250	FGY (60th Anniversary Edition/270mm Disc)	2016 - 2016	RR
YZ	250	FR/FS/FT/FV (4T)	2003 - 2006	RR
YZ	250	FW/FX/FY (4T)	2007 - 2009	RR
YZ	250	FZ/FA/FB/FD/FE/FF (4T)	2010 - 2015	RR
YZ	250	R/S/T/V/W	2003 - 2007	RR
YZ	250	X/Y/Z/A/B/D/E/F/G/H/J (2T)	2008 - 2018	RR
WR	450	F, Oversize with 270mm disc	2006 - 2008	RR
WR	450	FG/FH/FJ (270mm F Disc/4T)	2016 - 2021	RR
WR	450	FR/FS/FT/FV/FW/FX/FY/FA/FB/FD/FE/FF (4T)	2003 - 2015	RR
YZ	450	F	2021 - 2021	RR
YZ	450	F, Oversize with 270mm disc	2003 - 2007	RR
YZ	450	FG/FH/FJ (270mm Disc)	2016 - 2019	RR
YZ	450	FGY (60th Anniversary Edition/270mm Disc)	2016 - 2016	RR
YZ	450	FR/FS/FT/FV/FW	2003 - 2007	RR
YZ	450	FX/FY (4T)	2008 - 2009	RR
YZ	450	FZ/FA/FB/FD/FE/FF (4T)	2010 - 2015	RR
YZF	450	Efi	2020 - 2020	RR
ZERO				
DS		(ZF8.5/ZF11.4) (Nissin F&R Calipers)	2013 - 2013	RR
FX		(ZF2.8/ZF5.7)(Nissin F&R Calipers)	2013 - 2013	RR
MX		(ZF2.8/ZF5.7) (Nissin F&R Calipers)	2013 - 2013	RR
S		(ZF8.5/ZF11.4) (Nissin F&R Calipers)	2013 - 2013	RR
XU		(Nissin F&R Calipers)	2013 - 2013	RR

EQUIVALENTS OEM

5UN W0046 00	5UN W0046 50	5UN W0046 51	43082 0006	K4308 0006	IC3 W0046 10	IC3 W0046 50
25.25362	0631	69100 35810	69100 28820	43082 0048	9100797	69096-05
BE 675002509	43082 0107	855852	2525345000	2525362000	1C W0046 00	1C3 W0046 B0

AD	K5	S3

PART NUMBER

188

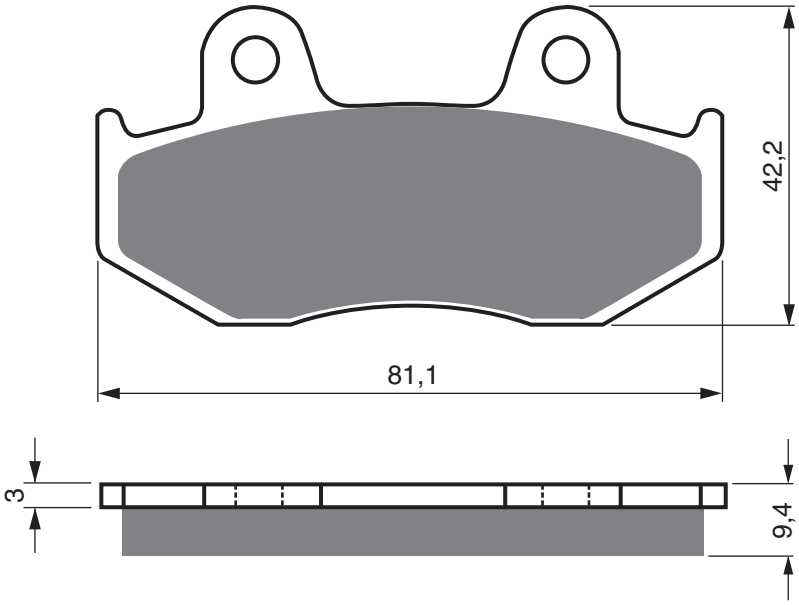

HONDA

SCV	110	-8 Lead (NJX 110 WH8 - 3 bolt Disc Fixing)	2008 - 2009	FL
NES	125	Y/1/2/3/4/5/6 (@ 125 Scooter)	2000 - 2006	FL
PES	125	6/7/8/9/A (PS 125)	2006 - 2009	FL
PES	125	R8/R9/RA (PS 125) ABS	2008 - 2009	FL
SES	125	2/3/4 Dylan	2002 - 2007	FL
SH	125	1/3 (Carb/Rear Drum Model)	2001 - 2003	FL
SH	125	i 4/5/6/7/8/R8/S7/D9 (Fuel Injection/Rear Drum Model)	2004 - 2009	FL
NES	150	Y/1/2/3/4/5/6 "@150 Scooter"	2001 - 2006	FL
PES	150	6/7/8/9/A (PS150)	2006 - 2010	FL
PES	150	R8/R9/RA ABS	2008 - 2011	FL
SES	150	2/3/4 Dylan	2002 - 2006	FL
SH	150	1/3 (Carb/Rear Drum Model)	2001 - 2003	FL
SH	150	i 4/5/6/7/S7/S8/R8/D9 (Fuel Injection/Rear Drum Model)	2004 - 2009	FL

ITALJET

	125	/150 Jack	2007 - 2007	FL	RR
	125	Torpedo	2007 - 2009	FL	
	150	Torpedo	2008 - 2009	FL	

MZ

	125	S Mantizz	2005 - 2007	FL

YAMAHA

YFZ	450	B/D	2013 - 2014	RR
YFZ	450	R	2011 - 2014	RR
YFZ	450	RSEA/RSEB/RSED/RSE	2011 - 2014	RR
YFZ	450	RY/RZ (Quad)	2009 - 2010	RR
YFZ	450	V/W/X	2006 - 2008	RR
YFM	700	RD Raptor	2013 - 2013	RR
YFM	700	RE	2013 - 2014	RR
YFM	700	RSE	2013 - 2018	RR

EQUIVALENTS OEM

0645 GCS 006	5TG W0046 10	06455 GCS 026	06455 GCS 016	06455 GCC B52

PART NUMBER

190

AD	K1	K5	S3	S33 RACING

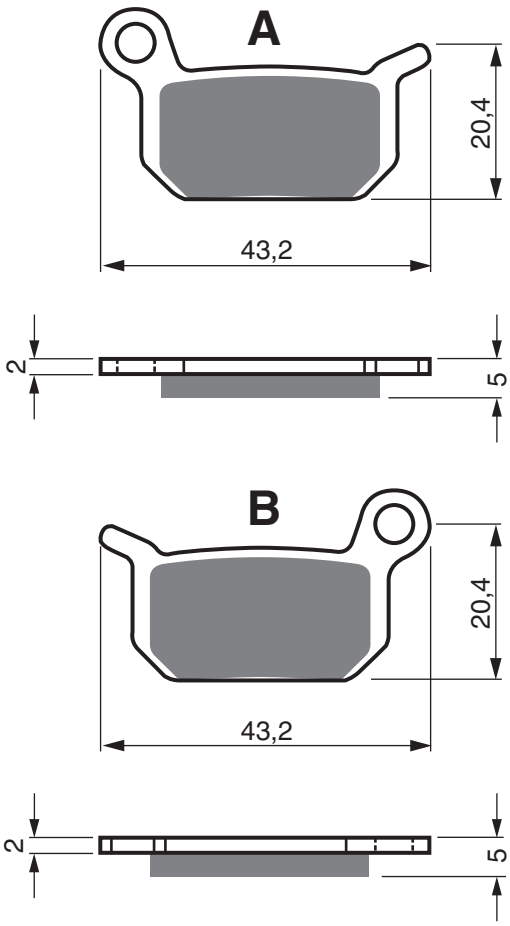

GAS GAS

ME-E		Electric	2021 - 2021	FL	RR
MC	50		2021 - 2021	FL	RR

HUSQVARNA

EE		5 Electric	2021 - 2021	FL	RR
CR	50		2011 - 2013	FL	RR
CR	50	Senior Pro	2005 - 2005	RR	
SM	50		2011 - 2013	FL	RR
TC	50		2018 - 2021	FL	RR
TC	50	Mini	2018 - 2021	FL	RR

KTM

SX-E		5 Electric	2020 - 2021	FL	RR
	50	Supermoto	2006 - 2006	FL	RR
CR	50	Senior Pro	2005 - 2005	RR	
SX	50		2006 - 2020	FL	RR
SX	50	Junior	2002 - 2013	FL	
SX	50	Mini	2008 - 2020	FL	RR
SX	50	Pro Senior LC	2002 - 2003	FL	
SX	50	Pro Senior LC (12" F/wheel)	2004 - 2020	FL	RR
SX	50	Senior	2002 - 2013	FL	
SX	65		2004 - 2008	RR	

LEM

R3		XC	2003 - 2003	FL	RR
RX		2/3		FL	RR
CX2/CX3	50			FL	RR
R2/R3	50	(Hydraulic System)	2003 - 2005	FL	RR
RX	65			FL	RR
RX	150		2011 - 2011	RR	

POLINI

X1R	50	H20		FL	RR
X2	50	R	2004 - 2004	FL	RR
X3R	50	H20		FL	RR
X5	65	RP	2005 - 2005	FL	RR

TOMOS

MC	50	Senior	2005 - 2005	FL	RR

EQUIVALENTS OEM

451 13 030 000	8000H4667

AD	K1	K5	K5-LX	S3	S33 RACING

PART NUMBER

191

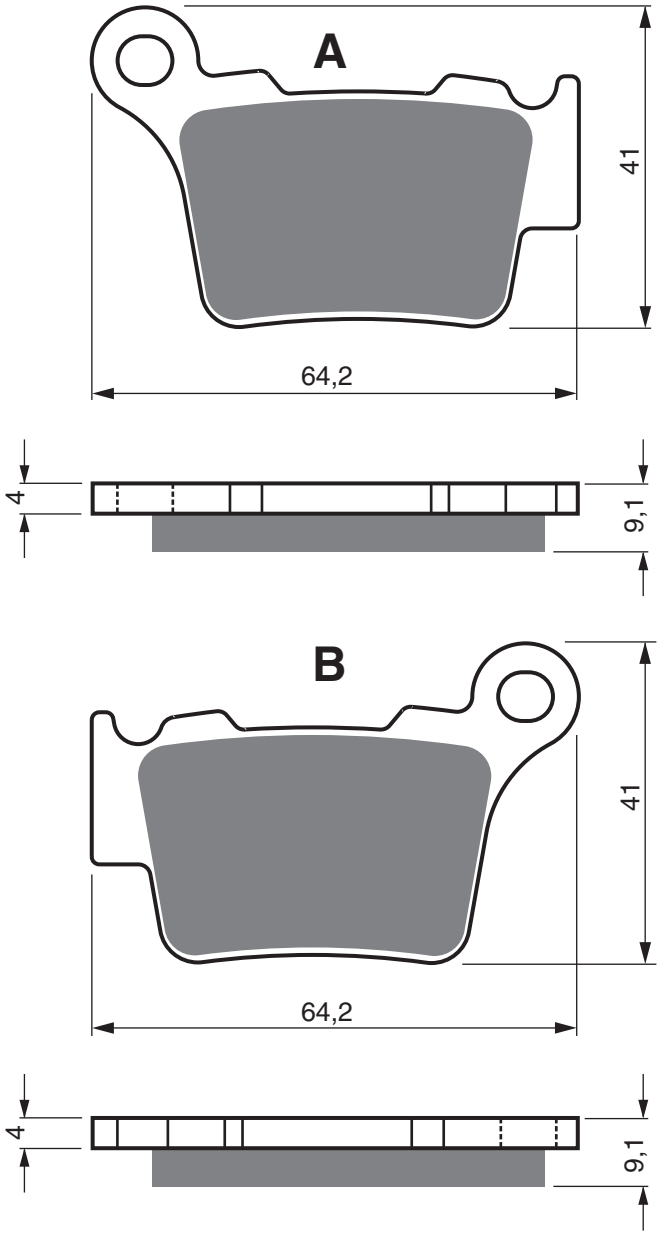

ALTA MOTORS (ELECTRIC)

		Redshift MX	2016 - 2018	RR
		Redshift SM	2016 - 2018	RR

BMW

G	450	X	2008 - 2011	RR

BREMBO RACING CALIPERS

		XQ 21390 PF 26 Off Road Rear Caliper	-	RR

GAS GAS

MC	125	(2T)	2021 - 2021	RR
EC	250	(2T)	2021 - 2021	RR
EC	250	F	2021 - 2021	RR
MC	250	F (4T)	2021 - 2021	RR
EC	300	(2T)	2021 - 2021	RR
EC	350	F (4T)	2021 - 2021	RR
MC	450	F (4T)	2021 - 2021	RR

HUSABERG

TE	125		2012 - 2014	RR
FE	250	(4T)	2013 - 2014	RR
TE	250	(2T)	2011 - 2014	RR
TE	300	(2T)	2011 - 2014	RR
FE	350	(4T)	2013 - 2014	RR
FE	390	(New 70° Engine)	2010 - 2012	RR
FE	450	(New 70° Engine)	2008 - 2014	RR
FX	450		2010 - 2012	RR
FE	501	(4T)	2013 - 2014	RR
FE	570	(New 70° Engine)	2009 - 2012	RR
FS	570	Supermoto	2010 - 2011	RR
TE	570		2009 - 2009	RR

PART NUMBER

191

AD | K1 | K5 | K5-LX | S3 | S33 RACING

HUSQVARNA

TC	85		2021 - 2021	RR
CR	125		2005 - 2013	RR
TC	125	(2T)	2014 - 2020	RR
TE	125	(2T)	2014 - 2019	RR
WR	125		2006 - 2013	RR
TE	150	i (2T)	2018 - 2020	RR
CR	250		2005 - 2013	RR
FC	250	(4T)	2014 - 2021	RR
FE	250	(4T)	2014 - 2020	RR
TC	250	(2T)	2014 - 2020	RR
TC	250	(4T)	2003 - 2004	RR
TC	250	(4T)	2005 - 2012	RR
TC	250	R (4T) (Kayaba Forks)	2013 - 2013	RR
TE	250	(2T)	2014 - 2020	RR
TE	250	(4T)	2006 - 2013	RR
TE	250	Meo Replica (4T)	2011 - 2011	RR
TXC	250	Cross Country	2008 - 2012	RR
TXC	250	R (4T) (Kayaba Forks)	2013 - 2013	RR
TC	300		2014 - 2015	RR
TE	300	(2T)	2011 - 2013	RR
TE	300	(2T)	2014 - 2020	RR
TE	300	Tpi (2T) inc Jarvis Edition	2019 - 2020	RR
TX	300	(2T)	2018 - 2021	RR
WR	300	(2T)	2009 - 2012	RR
TE	310	(4T)	2009 - 2013	RR
TE	310	R (4T) (Kayaba Forks)	2013 - 2013	RR
TXC	310	Cross Country	2012 - 2012	RR
TXC	310	R (4T) (Kayaba Forks)	2013 - 2013	RR
FC	350	(4T)	2014 - 2020	RR
FX	350	(4T)	2018 - 2021	RR
TE	410		2006 - 2006	RR
SMR	449		2011 - 2011	RR
TC	449	(4T)	2011 - 2013	RR
TE	449	(4T)	2011 - 2013	RR
FC	450	(4T) inc Rockstar Edition	2014 - 2020	RR
FE	450	(4T)	2014 - 2020	RR
FR	450	(4T)	2016 - 2020	RR
FX	450	(4T)	2017 - 2021	RR
SM	450	R	2006 - 2006	RR
SM	450	R	2009 - 2013	RR
SM	450	R (Radical Caliper)	2007 - 2010	RR
SM	450	RR	2008 - 2010	RR
SMR	450	RR (Rad.cal.)	2006 - 2007	RR
TC	450		2005 - 2010	RR
TE	450		2006 - 2010	RR
TXC	450		2011 - 2013	RR
FE	501	(4T)	2014 - 2020	RR
SM	510	R (Radial Caliper)	2006 - 2009	RR
TC	510		2005 - 2009	RR
TC	510		2005 - 2013	RR
TE	510		2006 - 2010	RR
TXC	510		2009 - 2010	RR
SMR	511		2011 - 2013	RR
TE	511	(4T)	2011 - 2013	RR
SM	530	RR	2008 - 2010	RR
TE	570		2009 - 2013	RR
SMR	630	(4T)	2010 - 2012	RR

KTM

SX	85		2021 - 2021	RR
EXC	125		2004 - 2008	RR
EXC	125	(2T) Six Days	2011 - 2017	RR
SX	125	(Upside Down Forks)	2004 - 2008	RR
SX	125	(Upside Down Forks)	2009 - 2021	RR
XC-W	125	(2T)	2017 - 2020	RR
EXC	150	Tpi	2021 - 2021	RR
SX	150		2008 - 2008	RR
SX	150	(Upside down Forks)	2009 - 2021	RR
XC	150	(USD)	2011 - 2013	RR
XC-W	150	(2T) inc Tpi	2017 - 2021	RR
EXC	200	(inc Six Days)	2004 - 2016	RR
EXC	250		2004 - 2021	RR
EXC	250	(2T) Six Days	2011 - 2021	RR
EXC	250	4T	2004 - 2005	RR
EXC	250	Racing	2006 - 2006	RR
EXC-F	250		2006 - 2021	RR
EXC-F	250	(4T) Six Days	2011 - 2021	RR
SX	250	(2T) (Upside Down Forks)	2009 - 2021	RR
SX	250	(2T/Upside down forks)	2003 - 2008	RR
SX-F	250	(4T)	2006 - 2021	RR
SX-F	250	Ken Roczen Edition	2012 - 2012	RR
SX-F	250	Prado	2020 - 2021	RR
XC	250	(2T) Tpi	2019 - 2020	RR
XC	250	(USD)	2011 - 2017	RR
XC-F	250	(USD)	2011 - 2021	RR
EXC	300		2004 - 2021	RR
EXC	300	(2T) Inc Tpi Six Days & Erzbergrodeo	2011 - 2021	RR
EXC	300	(2T) Six Days	2011 - 2021	RR
EXC	300	E (Electric Start)	2008 - 2019	RR
XC	300	(2T)	2011 - 2021	RR
EXC-F	350	(USD)	2011 - 2021	RR
EXC-F	350	Six Days	2012 - 2021	RR
SX-F	350	(Upside down Forks)	2011 - 2020	RR
SX-F	350	Six Days Diaphragm Spring	2012 - 2012	RR
SX-F	350	Tony Cairoli Edition	2012 - 2012	RR
XC-F	350		2012 - 2021	RR
EXC	400	(4T)	2009 - 2011	RR
EXC	400	Racing	2004 - 2007	RR
XC-W	400		2007 - 2009	RR
	450	Rally	2017 - 2021	RR
EXC	450	(4T)	2004 - 2008	RR
EXC	450	(4T)	2009 - 2011	RR
EXC	450	(4T)	2012 - 2021	RR
EXC	450	(4T) Six Days	2011 - 2021	RR
EXC	450	Racing	2006 - 2007	RR
EXC-R	450	(4T)	2008 - 2008	RR
SMR	450		2005 - 2006	RR
SMR	450	(Brembo F/caliper)	2014 - 2014	RR
SMR	450	(Magura Caliper)	2007 - 2013	RR
SX	450		2003 - 2007	RR
SX	450	F	2008 - 2015	RR
SX	450	SM Factory replica	2004 - 2004	RR
SX	450	SMR	2004 - 2004	RR
SXS	450		2004 - 2010	RR
XC-F	450		2008 - 2012	RR
XC-F	450		2013 - 2019	RR
XC-W	450		2007 - 2009	RR
EXC	500	(4T)	2012 - 2021	RR
EXC	500	(4T) Six Days	2012 - 2021	RR
XCF-W	500		2021 - 2021	RR
SX-F	505		2007 - 2008	RR
SX-F	505		2009 - 2009	RR
EXC	525		2004 - 2005	RR
EXC	525	Racing	2004 - 2006	RR
SMR	525		2004 - 2004	RR
SMR	525		2005 - 2005	RR

AD	K1	K5	K5-LX	S3	S33 RACING

PART NUMBER

191

SX	525		2003 - 2006	RR
SX	525	Racing	2004 - 2006	RR
SX	525	SMR	2004 - 2004	RR
XC	525	Racing	2006 - 2007	RR
EXC	530		2009 - 2010	RR
EXC	530	(4T) Six Days	2011 - 2011	RR
EXC-R	530	(4T)	2008 - 2008	RR
EXC	535		2004 - 2005	RR
SMR	560		2007 - 2007	RR
SXC	625		2005 - 2006	RR
SMR	650	Supermoto	2006 - 2006	RR
OSSA				
	250	Enduro i	2012 - 2012	RR
	300	Enduro i	2012 - 2012	RR
RIEJU				
	250	Marathon	2009 - 2010	RR
	450	Marathon	2009 - 2010	RR
MRX	450		2008 - 2010	RR
SHERCO				
SC	125	Factory	2019 - 2020	RR
SE-R	125		2019 - 2020	RR
SC	250	Factory	2019 - 2020	RR
SCF	250	Factory	2019 - 2020	RR
SE	250	Factory	2019 - 2020	RR
SE	250	i (2T/Brembo Rear Caliper)	2012 - 2015	RR
SE	250	i Enduro (Brembo rear Caliper) (2T)	2012 - 2015	RR
SE-R	250		2019 - 2020	RR
SE-R	250	(2T)	2012 - 2015	RR
SEF	250	(4T)	2013 - 2015	RR
SEF	250	Factory	2019 - 2020	RR
SEF-R	250		2019 - 2020	RR
SEF-R	250	(4T)	2013 - 2015	RR
SC	300	Factory	2019 - 2020	RR
SCF	300	Factory	2019 - 2020	RR
SE	300	Factory	2019 - 2020	RR
SE	300	i (2T/Brembo Rear Caliper)	2012 - 2015	RR
SE	300	i Enduro (2T) (Brembo Rear Caliper)	2012 - 2015	RR
SE-R	300		2019 - 2020	RR
SE-R	300	(2T)	2012 - 2015	RR
SEF	300	(4T)	2013 - 2015	RR
SEF	300	Factory	2019 - 2020	RR
SEF-R	300		2019 - 2020	RR
SEF-R	300	(4T)	2013 - 2015	RR
SCF	450	Factory	2019 - 2020	RR
SE-R	450		2019 - 2020	RR
SEF	450	(4T)	2014 - 2015	RR
SEF	450	Factory	2019 - 2020	RR
SEF-R	450	(4T)	2014 - 2015	RR
SCF	500	Factory	2019 - 2020	RR
SEF	500	Factory	2019 - 2020	RR
SEF-R	500		2019 - 2020	RR
SWM				
MC	125	R	2018 - 2018	RR
MC	250	S	2016 - 2016	RR
FT	300	R (RS 300 R Flat Track)	2017 - 2017	RR
RS	300	R (4T)	2015 - 2020	RR
RS	340	S	2016 - 2016	RR
SM	450	R (4T)	2015 - 2018	RR
RS	500	R (4T)	2015 - 2018	RR
SM	500	R	2016 - 2020	RR
MX	450		2006 - 2006	RR

EQUIVALENTS OEM

548 13 090 000	548 13 090 100	8000A2790	548 13 090 300	34 21 7 717 324	3711	07849312/27

PART NUMBER

192

AD | S3

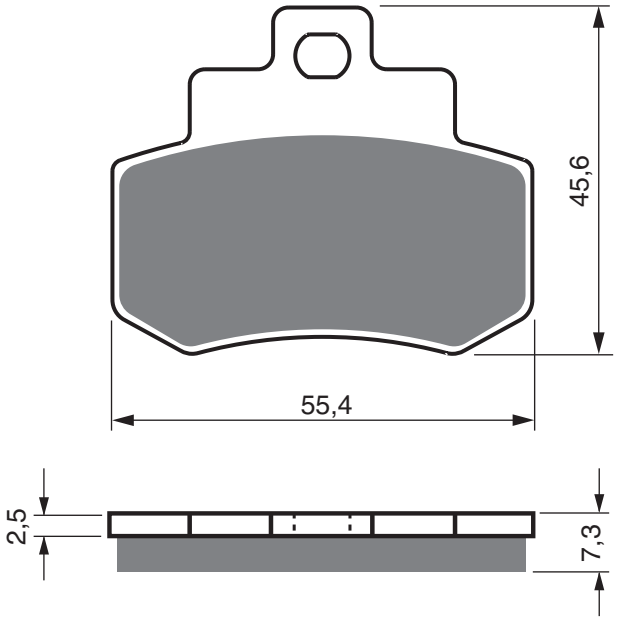

KYMCO

250	Grand Dink	2001 - 2006	RR

EQUIVALENTS OEM

43105 KKC4 9000

AD | S3 | S33 RACING

PART NUMBER

193

A

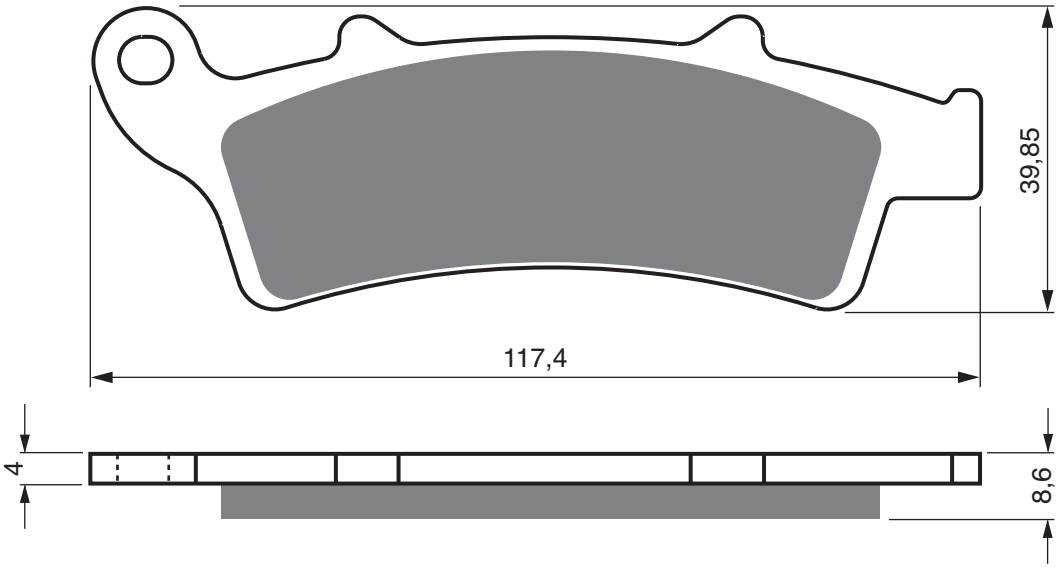

B

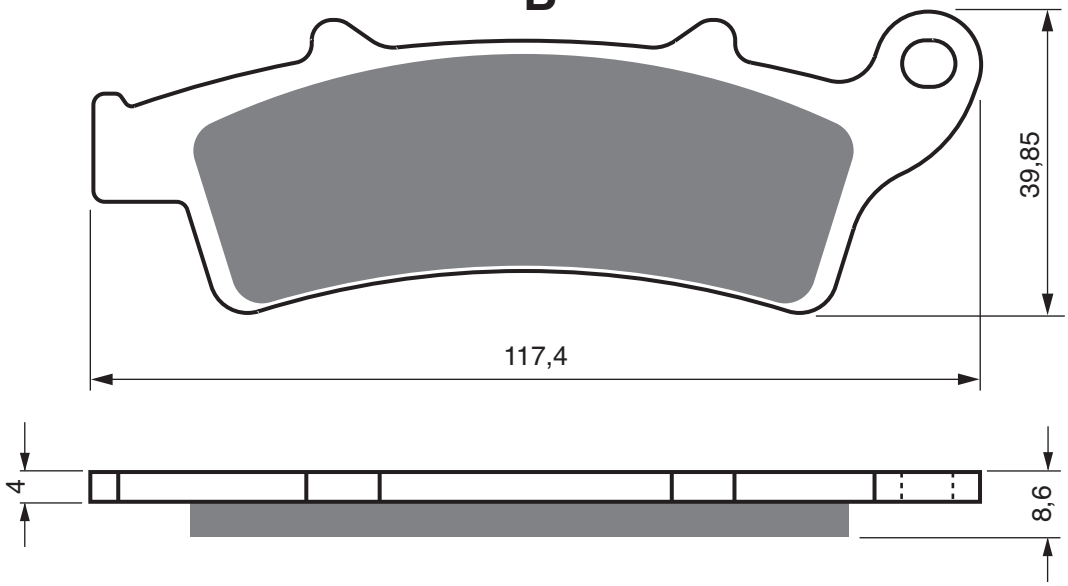

APRILIA

125	Atlantic	2003 - 2008	FL
125	Atlantic	2010 - 2010	FL
125	Scarabeo	2007 - 2010	FL
125	Scarabeo GT	2004 - 2006	FL
200	Atlantic	2003 - 2005	FL
200	Scarabeo	2007 - 2009	FL
250	Atlantic	2003 - 2005	FL
250	Atlantic ie	2006 - 2008	FL
250	Scarabeo	2006 - 2006	FL
250	Scarabeo ie	2007 - 2010	FL
300	Atlantic	2010 - 2011	FL
300	Scarabeo S	2009 - 2010	FL
400	Atlantic Sprint	2005 - 2008	FL
500	Atlantic Sprint	2005 - 2008	FL

KYMCO

125	i X Town ABS	2016 - 2020	FL
125	New Downtown i	2015 - 2020	FL
125	New X Town i (ABS)	2016 - 2020	FL
125	People GTi	2010 - 2015	FL
200	People GTi	2010 - 2015	FL
300	People GTi	2010 - 2015	FL
300	X Town i	2017 - 2020	FL
300	Agility Max i(ABS)	2015 - 2015	FL
K-XCT 300	i	2012 - 2015	FL
K-XCT 300	i (ABS)	2012 - 2015	FL
350	New Downtown i	2015 - 2020	FL

MALAGUTI

250	Madison S	1999 - 2003	FL
400	Madison K	2002 - 2006	FL

PEUGEOT

125	LOOXOR	2003 - 2006	FL
150	Looxor	2003 - 2006	FL

PIAGGIO VESPA

350	Beverly ie Sport Touring (Non ABS/330 cc/4T)	2011 - 2015	FL
350	Beverly ie Sport Touring ABS (330 cc/4T)	2011 - 2015	FL

SCARABEO

125	ie	2010 - 2015	FL
125	Net	2010 - 2011	FL
200	ie	2010 - 2015	FL
200	Net	2010 - 2011	FL
300	S	2009 - 2011	FL

EQUIVALENTS OEM

119 481 00	81133603	8133761	8133815	8213648	45105 LGE5 305	666935

PART NUMBER

194

AD	S3	S33 RACING	GP5	GP6	GP7

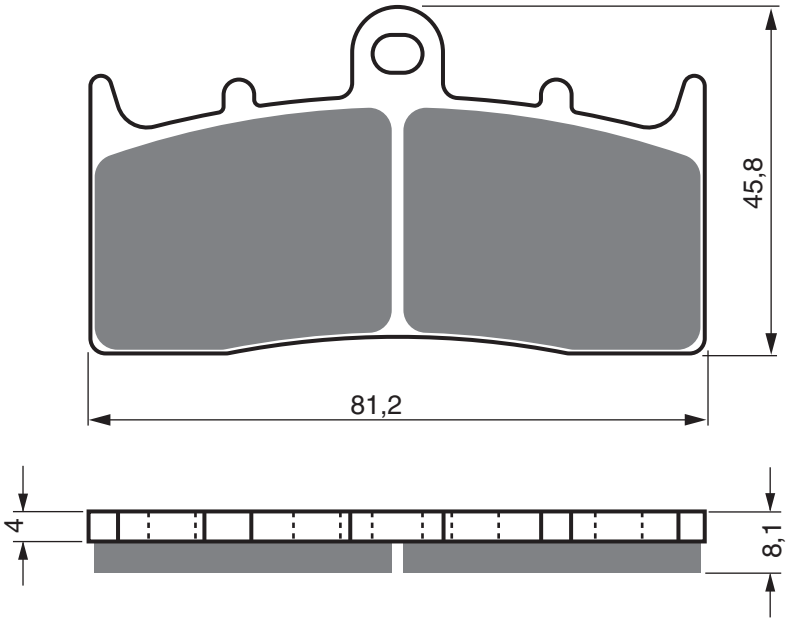

BMW

R	850	R	2004 - 2006	FL	FR
R	1 100	S (ABS)	2000 - 2006	FL	FR
R	1 150	GS (EVO - R21/0415/0495)	2001 - 2003	FL	FR
R	1 150	GS Adventure (Evo R21A 0441/0492)	2001 - 2006	FL	FR
R	1 150	R	2001 - 2006	FL	FR
R	1 150	R Rockster (R21//E1/00041)	2003 - 2006	FL	FR
R	1 150	R Rockster Edition 80	2004 - 2004	FL	FR
R	1 150	RS (Integral ABS)	2001 - 2004	FL	FR
K	1 200	LT (Evo-Integral ABS/Disc Has Loose Bobbins)	2000 - 2007	FL	FR
K	1 200	LT (Evo integral ABS/Disc Has fixed bobbins)	2008 - 2009	FL	FR
K	1 200	R (K27/0378/Tokico caliper)	2005 - 2010	FL	FR
K	1 200	R (Urban)	2005 - 2008	FL	FR
K	1 200	R Sport	2007 - 2009	FL	FR
R	1 200	C Classic	2003 - 2004	FL	FR
R	1 200	C Independent (Cast wheel)	2003 - 2004	FL	FR
R	1 200	C Montauk	2004 - 2004	FL	FR
R	1 200	CL	2002 - 2004	FL	FR
R	1 200	R (K27/0378)	2007 - 2013	FL	FR
R	1 200	R Classic	2011 - 2014	FL	FR
R	1 200	R SE	2010 - 2011	FL	FR
K	1 300	R (Disc has fixed bobins)	2009 - 2012	FL	FR
K	1 300	R Carbon (Disc has fixed bobbins)	2012 - 2012	FL	FR
K	1 300	R Dynamic (Disc has fixed bobbins)	2011 - 2015	FL	FR

KAWASAKI

ZRX	400	(ZX 400 E4-E7)	1998 - 2001	FL	FR

EQUIVALENTS OEM

34 11 7 658 386	34 11 7 655 898	34 11 7 690 170	34 11 7 690 169	43082 1217

AD | S3 | S33 RACING

PART NUMBER

195

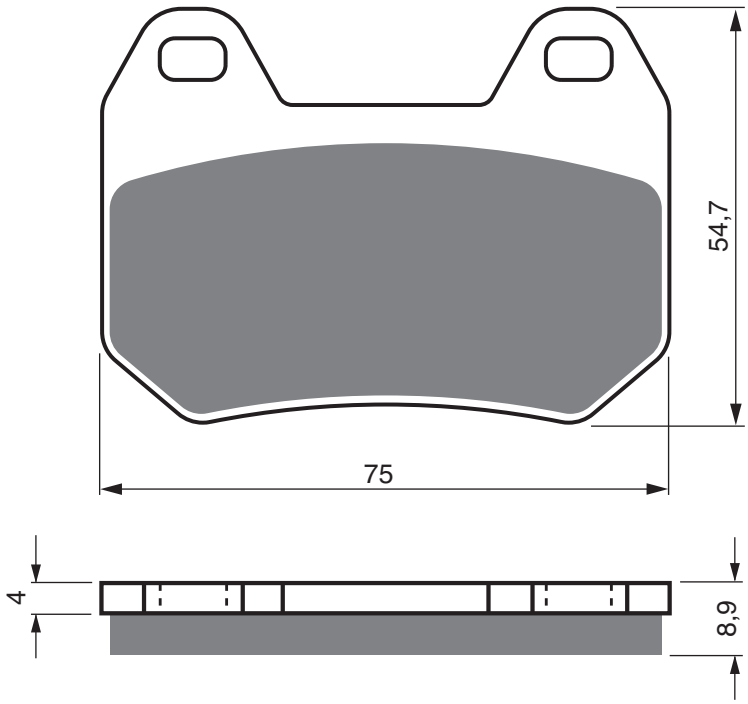

BMW

K	1 200	LT (Integral ABS & STD ABS Models)	1997 - 2000	RR
K	1 200	LT (Evo-Integral ABS/Disc Has Loose Bobbins)	2000 - 2007	RR
K	1 200	LT (Evo integral ABS/Disc Has fixed bobbins)	2008 - 2009	RR
R	1 200	CL	2002 - 2004	RR

EQUIVALENTS OEM

34 21 7 671 246	34 21 7 657 492	34 21 7 680 374	34 21 7 680 375	34 21 2 333 337

PART NUMBER

196

AD	S3	S33 RACING	GP5	GP6	GP7

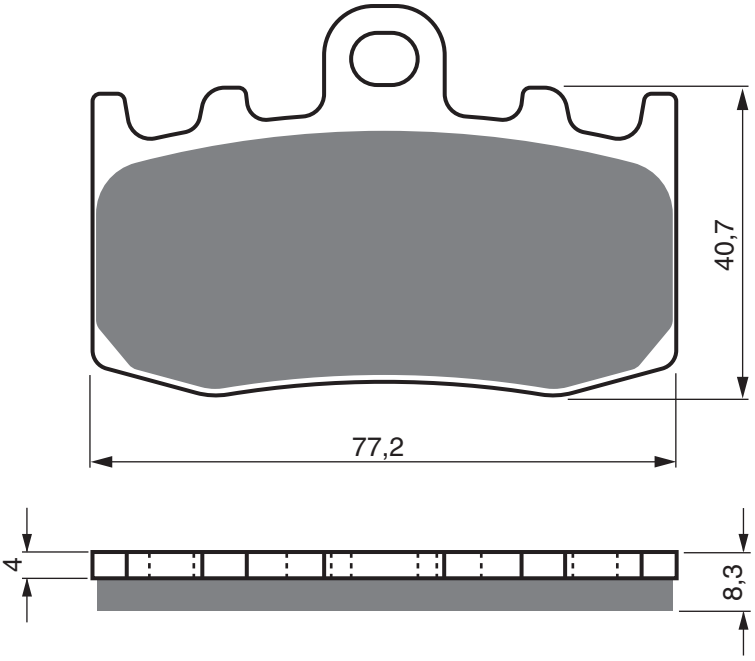

BMW

R	850	RT	2006 - 2006	FL	FR
R	1 100	S (Non ABS)	2000 - 2003	FL	FR
R	1 150	RT (Integral ABS)	2000 - 2006	FL	FR
HP2	1 200	Megamoto (K25)	2007 - 2010	FL	FR
K	1 200	GT (K41) (2 pin rear pad) Disc Has loose bobbins	2003 - 2006	FL	FR
K	1 200	GT (K44) Disc Has fixed bobbins	2006 - 2008	FL	FR
K	1 200	RS (With & Without Integral ABS)	2001 - 2004	FL	FR
K	1 200	S (K40)	2005 - 2008	FL	FR
R	1 200	GS	2004 - 2007	FL	FR
R	1 200	GS (30 years GS)	2011 - 2011	FL	FR
R	1 200	GS (Cast wheel)	2010 - 2011	FL	FR
R	1 200	GS (K25/0307/Cast/Spoke wheel)	2002 - 2007	FL	FR
R	1 200	GS Adventure (30 years GS)	2011 - 2011	FL	FR
R	1 200	GS Adventure (K25/0382/Spoke Wheel)	2005 - 2007	FL	FR
R	1 200	GS Adventure (Spoke wheel)	2010 - 2013	FL	FR
R	1 200	GS Adventure / M (K25/0380/Spoke wheel)	2006 - 2009	FL	FR
R	1 200	GS Adventure Triple Black	2012 - 2012	FL	FR
R	1 200	GS Rallye (Spoke wheel)	2012 - 2012	FL	FR
R	1 200	GS Triple Black (Spoke wheel)	2011 - 2013	FL	FR
R	1 200	GS/M (K25/0303/Cast wheel)	2006 - 2009	FL	FR
R	1 200	RT (Disc has fixed bobbins)	2010 - 2013	FL	FR
R	1 200	RT (K26/0368/Brembo caliper)	2005 - 2009	FL	FR
R	1 200	RT SE (Disc has fixed bobbins)	2010 - 2013	FL	FR
R	1 200	S (K29/0366/Brembo caliper)	2006 - 2008	FL	FR
R	1 200	ST K28/0328	2003 - 2008	FL	FR
K	1 300	GT (Disc has fixed bobbins)	2009 - 2011	FL	FR
K	1 300	GT SE (Disc has fixed bobbins)	2010 - 2011	FL	FR
K	1 300	S (Fixed bobbins - Non & ABS Models)	2009 - 2015	FL	FR
K	1 300	S HP (Fixed bobbins - Non & ABS Models)	2012 - 2012	FL	FR
K	1 300	S Sport (Fixed bobbins - Non & ABS models)	2012 - 2015	FL	FR

EQUIVALENTS OEM

34 11 7 660 448	34 11 7 671 780	34 11 7 683 064	34 11 8 534 183

AD | S3 | S33 RACING

PART NUMBER

197

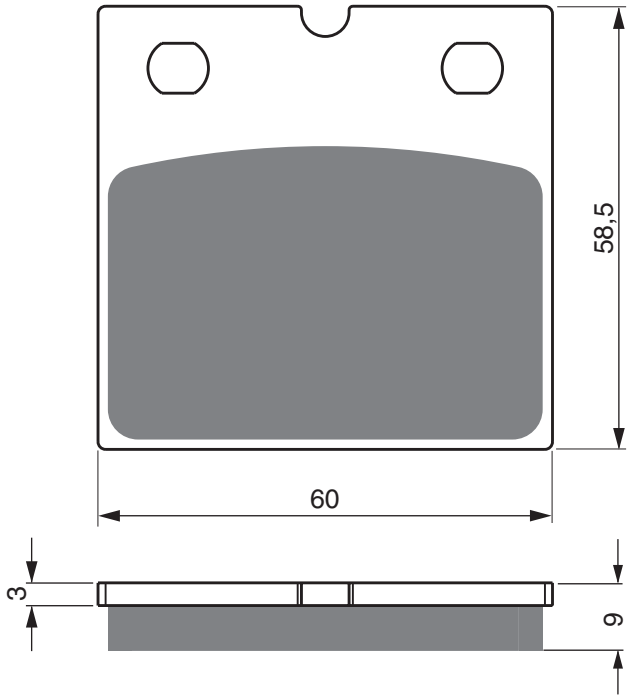

BENELLI					
	900	SE1 (6cyl)	1983 - 1983	RR	
BMW					
R65	650	(Single rotor)	1988 - 1989	FL	FR
R80	800	/R80 RT (Single Rotor)	1984 - 1990	FL	
R80	800	/R80 RT (Single Rotor)	1990 - 1995	FL	
R80	800	GS	1987 - 1995	FL	
R80	800	PD/CH	1990 - 1995	FL	
R	850	GS	1996 - 1996	FL	FR
R	850	R (Spoke Wheel)	1994 - 1996	FL	FR
R100	1 000	GS	1986 - 1994	FL	
R100	1 000	PD	1989 - 1996	FL	
LAVERDA					
	1 000	RGS Corsa	1984 - 1984	FL	FR
MOTO-GUZZI					
	850	Le Mans III (12 Spoke Cast Wheel)	1981 - 1984	RR	
	1 000	SP (12 Spoke Cast Wheels)	1979 - 1983	RR	

EQUIVALENTS OEM

34 11 1 354 720	34 11 2 331 177	34 11 2 314 545	34 11 2 310 601	18654660	GV18654660

PART NUMBER

198

AD	K1	K5	S3	S33 RACING

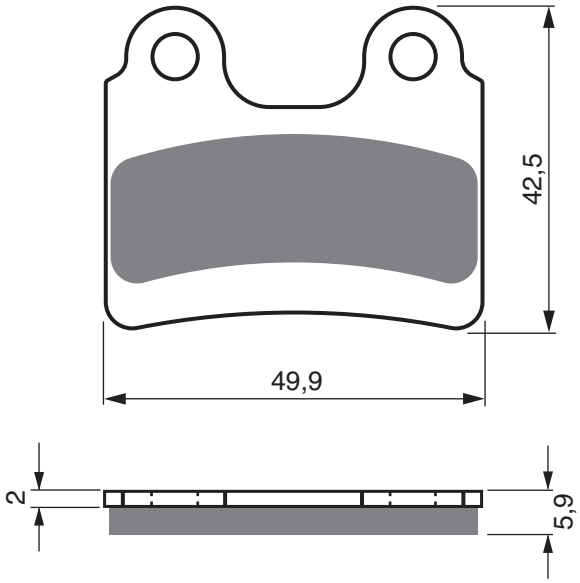

AJP

PR3	125	Enduro	2008 - 2012	RR	
PR3	125	Enduro Pro	2010 - 2012	RR	
PR3	125	Supermoto	2008 - 2012	RR	
PR3	125	Supermoto Pro	2010 - 2011	RR	
PR3	125	Trail	2011 - 2012	RR	
PR4	125	Enduro	2004 - 2009	RR	
PR4	125	Supermoto	2004 - 2009	RR	
PR3	200	Enduro	2008 - 2011	RR	
PR3	200	Enduro Pro	2010 - 2011	RR	
PR3	200	M/X Pro	2010 - 2011	RR	
PR3	200	MX	2010 - 2011	RR	
PR3	200	Supermoto	2008 - 2011	RR	
PR3	200	Supermoto Pro	2010 - 2011	RR	
PR4	200	Enduro	2004 - 2009	RR	
PR4	200	Supermoto	2010 - 2011	RR	

BETA

EVO	80	Senior	2009 - 2020	FL	
REV	80		2008 - 2008	FL	
EVO	125	(2T)	2009 - 2015	FL	
REV 3	125		2000 - 2005	FL	RR
REV 3	125		2006 - 2008	FL	
EVO	200	(2T)	2009 - 2020	FL	
REV 3	200		2000 - 2005	FL	RR
REV 3	200		2006 - 2008	FL	
EVO	250	(2T)	2009 - 2020	FL	
EVO	250	(4T)	2009 - 2020	FL	
EVO	250	Factory	2009 - 2020	FL	
REV	250	4T	2007 - 2008	FL	
REV3	250		2000 - 2004	FL	
REV3	250		2000 - 2004	RR	
REV3	250		2005 - 2008	FL	
REV3	270		2000 - 2004	FL	
REV3	270		2000 - 2004	RR	
REV3	270		2005 - 2008	FL	
EVO	300	(2T)	2009 - 2020	FL	
EVO	300	(4T)	2009 - 2020	FL	

GAS GAS

TXT-E		(Full Size Electric Bike)	2012 - 2014	FL	
EC	50	Boy (LC)	2005 - 2007	FL	
TXT	50	Rookie	2004 - 2009	FL	
TXT	80	Cadet	2007 - 2009	FL	
TXT	80	PRO Racing (2T)	2015 - 2015	FL	
TXT	80	Rookie	2004 - 2009	FL	
TXT	125	(TXT PRO)	2004 - 2011	FL	
TXT	125	(For models with AJP Caliper with 2 pin pad fixing)	2012 - 2014	FL	
TXT	125	Randonne (4T)	2012 - 2015	FL	
TXT	200	(TXT PRO)	2004 - 2011	FL	
TXT	200	Randonne (4T)	2014 - 2015	FL	
TXT	250	(For models with AJP Caliper with 2 pin pad fixing)	2012 - 2014	FL	
TXT	250	(TXT PRO)	2004 - 2011	FL	
TXT	250	Contact (2T)	2015 - 2015	FL	
TXT	280	(For models with AJP Caliper with 2 pin pad fixing)	2012 - 2014	FL	
TXT	280	(TXT PRO)	2004 - 2011	FL	
TXT	300	(For models with AJP Caliper with 2 pin pad fixing)	2012 - 2014	FL	
TXT	300	(TXT PRO)	2004 - 2011	FL	

MONTESA

4RT	250	Cota	2005 - 2010	FL	
4RT	260	Cota (STD Version ED/3E)	2014 - 2021	FL	
	315	R (Honda)	2001 - 2004	FL	

AD	K1	K5	S3	S33 RACING

PART NUMBER

198

OSSA

TR	125	i	2013 - 2015	FL
	250	Explorer i	2014 - 2015	FL
TR	250	i	2014 - 2015	FL
	280	Explorer i	2012 - 2015	FL
TR	280	i	2010 - 2015	FL
TR	300	i	2014 - 2015	FL

SCORPA

	125	Twenty (2T)	2015 - 2015	FL
SR	125	(2T)	2010 - 2013	FL
SR	125	Long Ride (2T)	2010 - 2011	FL
SY	125	4T Long Ride	2009 - 2010	FL
SY	125	F	2003 - 2010	FL
SY	125	FR (4T)	2003 - 2009	FL
SY	125	FR (4T)	2009 - 2011	FL
TY	125	(4T)	2011 - 2015	FL
SY	175	F	2006 - 2006	FL
SY	200	F (4T)(163cc)	2008 - 2008	FL
	250	Twenty (2T)	2015 - 2015	FL
SY	250	F	2006 - 2010	FL
SY	250	F Long Ride (4T)	2007 - 2008	FL
SY	250	FR	2006 - 2010	FL
SY	250	FR Long Ride	2010 - 2010	FL
SY	250	Long Ride (2T)	2004 - 2006	FL
SY	250	R (2T)	2000 - 2009	FL
SR	280	(2T)	2009 - 2014	FL
SR	280	(2T) Long Ride	2009 - 2011	FL
	300	Twenty (2T)	2015 - 2015	FL

SHERCO

	80	Trials 0.8 (2T)	2006 - 2010	FL
ST	80	(2T/Braktec Caliper)	2014 - 2015	FL
	125	Trials 1.25 (2T) (AJP Caliper)	2006 - 2012	FL
FST	125		2018 - 2019	FL
ST	125	(2T/Braktec Caliper)	2014 - 2015	FL
ST-R	125		2018 - 2019	FL
TY	125	Classic	2018 - 2019	FL
XY	125	(4T)	2014 - 2015	FL
	250	Trials 2.5 (2T) (AJP Caliper)	2006 - 2012	FL
ST	250	(2T/Braktec Caliper)	2014 - 2015	FL
ST	250	Factory	2018 - 2019	FL
ST-R	250		2018 - 2019	FL
	290	Trials 2.9 (2T) (AJP Caliper)	2006 - 2012	FL
ST	290	(2T/Braktec Caliper)	2014 - 2015	FL
FST	300		2018 - 2019	FL
ST-R	300		2018 - 2019	FL
ST	305	(2T/Braktec Caliper)	2014 - 2015	FL
	320	Trials 3.2 (2T) (AJP Caliper)	2005 - 2012	FL

XISPA

X	125	R	2008 - 2009	FL
X	250	R	2008 - 2009	FL
X	280	R	2008 - 2009	FL

EQUIVALENTS OEM

45105 NN3 830	6211	25-25352	C389	00TRS01A0027	2525352000

PART NUMBER

199

AD	K1	K5	S3	S33 RACING

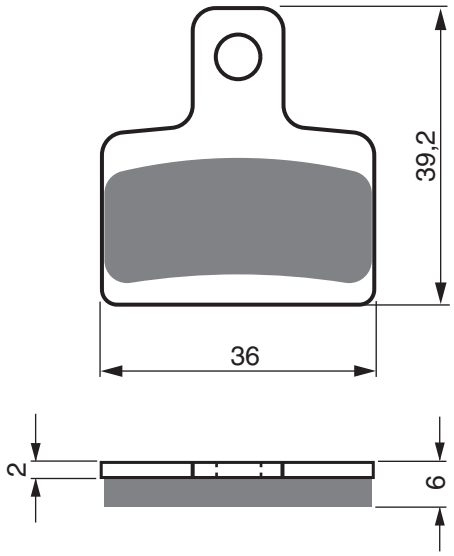

SCORPA

SR	125	(2T)	2010 - 2013	RR
SR	125	Long Ride (2T)	2010 - 2011	RR
SY	125	FR (4T)	2009 - 2011	RR
TY	125	(4T)	2011 - 2015	RR
	250	Twenty (2T)	2015 - 2015	RR
SY	250	F	2006 - 2010	RR
SY	250	FR Long Ride	2010 - 2010	RR
SY	250	R (2T)	2000 - 2009	RR
	280	Twenty	2014 - 2014	RR
SR	280	(2T)	2009 - 2014	RR
SR	280	(2T) Long Ride	2009 - 2011	RR

EQUIVALENTS OEM

S1A 40202 00 00

AD	S3	S33 RACING	GP5	GP6	GP7	GPR

1 set = 4 pcs

PART NUMBER

200

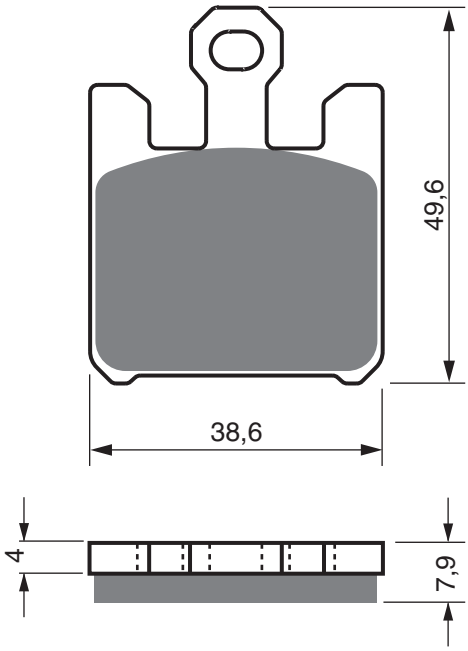

KAWASAKI

ZX-6RR	600	(ZX 600 N1/N6F)	2005 - 2006	FL	FR
ZX-6RR	600	(ZX600 K1/M1)	2003 - 2004	FL	FR
ZX-6R	636	(ZX 636 B1/B2)	2003 - 2004	FL	FR
ZX-6R	636	(ZX 636 C1/C6F)	2005 - 2006	FL	FR
ZX-10R	1 000	(ZX 1000 C1/C2/D6F/D7F)	2004 - 2007	FL	FR
ZX	1 200	(ZX 1200 B3/B4/B6F)	2004 - 2006	FL	FR
VN	1 600	B2H/B6F/B7F (Mean Streak)	2005 - 2008	FL	FR

SUZUKI

GSX-R	1 000	K3	2003 - 2003	FL	FR
M	1 600	(VZ 1600 K5 Intruder)	2005 - 2005	FL	FR
VZ	1 800	K6	2006 - 2006	FL	FR

EQUIVALENTS OEM

59100 18851	43082 1293	43082 0018	43082 0019	43082 0021	43082 0031	43082 0037
43058 0058	43082 0030	43082 0032				

PART NUMBER

201

AD | S3

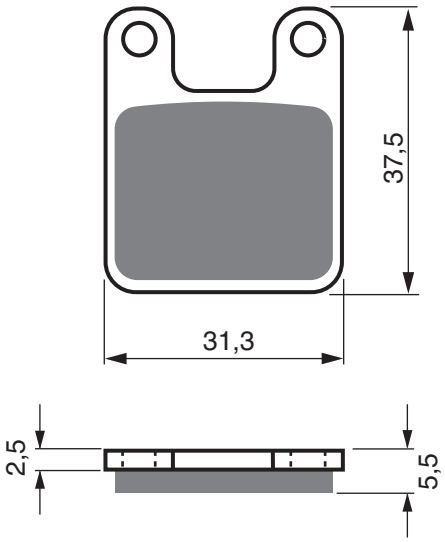

MINIMOTO

		Pasini/GRC Calipers (Square 2 pin type)	FL	RR

POLINI

		GRC	FL	
	110	cc Mini Motard 10"wheels (2pin fixing)	FL	RR
XP4T	110	Cross 12" front/10" rear wheel	FL	RR
XP4T	110	Cross 14" front/12" rear wheel	FL	RR

EQUIVALENTS OEM

144 750 008

AD | S3

PART NUMBER

202

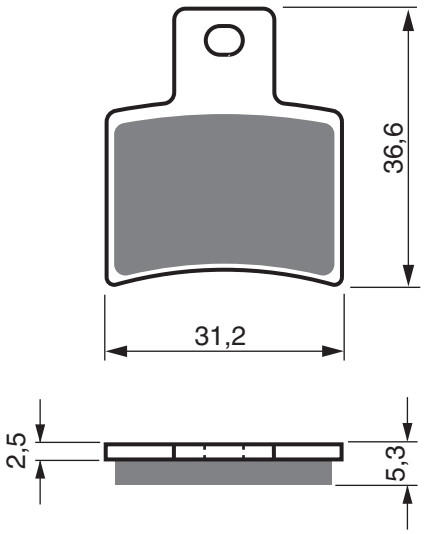

MINIMOTO

New | FL

PART NUMBER

203

S3

S33 RACING

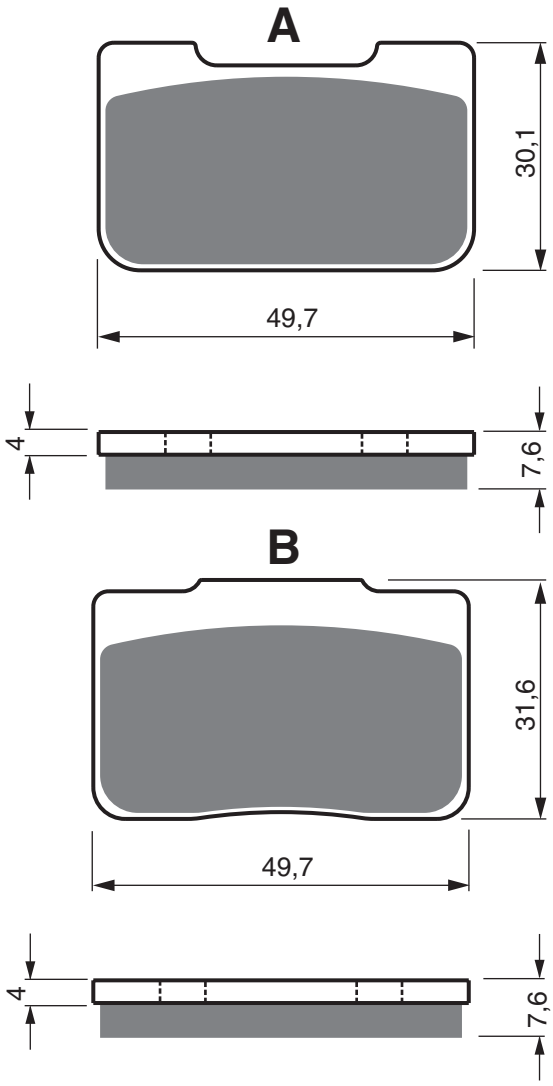

BREMBO RACING CALIPERS

P2 30 (XA1J040) Rear CNC caliper	RR
P2 34 (X988870) Rear CNC caliper	RR
P4 24 (X206101) Rear caliper	RR
P4 24 (X206121) Rear CNC caliper	RR

AD | S3

PART NUMBER

204

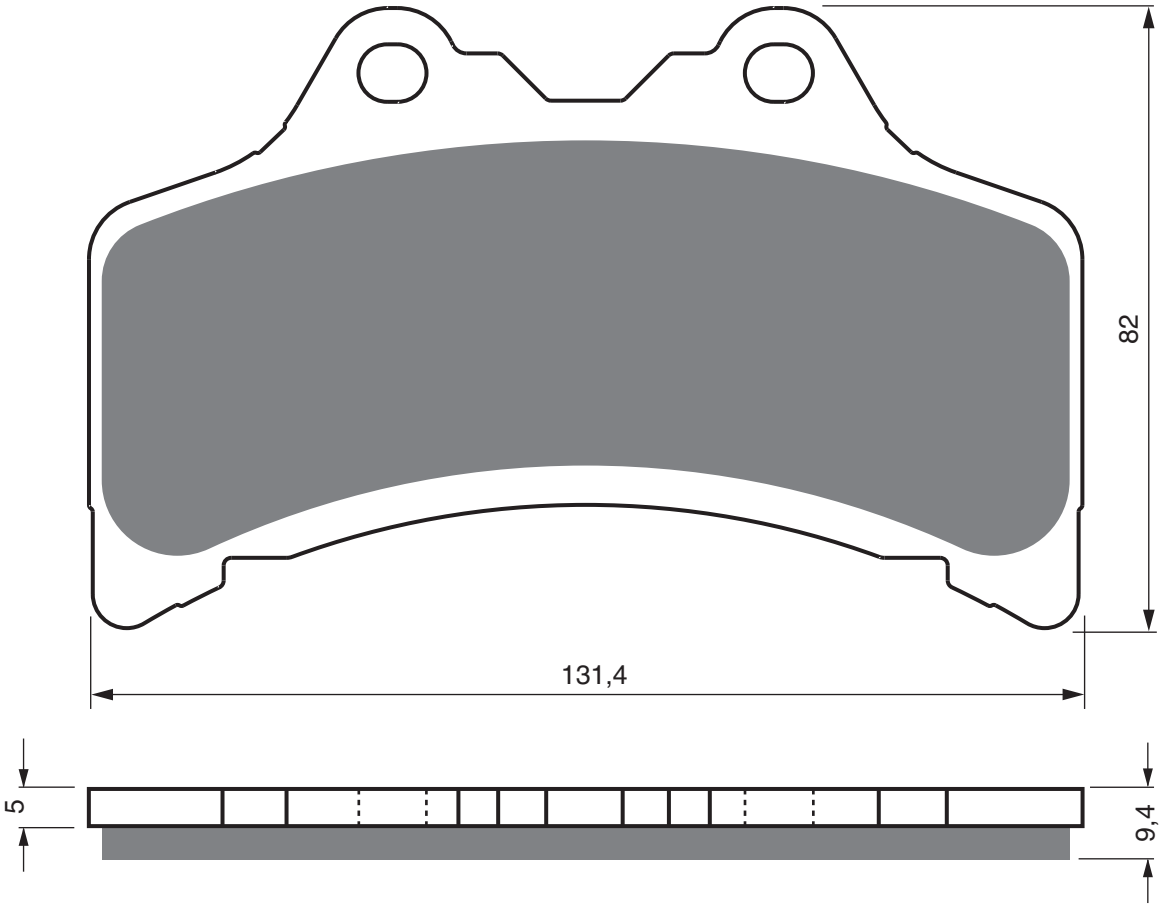

YAMAHA

GTS	1 000	1993 - 1999	FL

EQUIVALENTS OEM

4BH W0045 01

PART NUMBER

205

AD	K1	K5	S3	S33 RACING

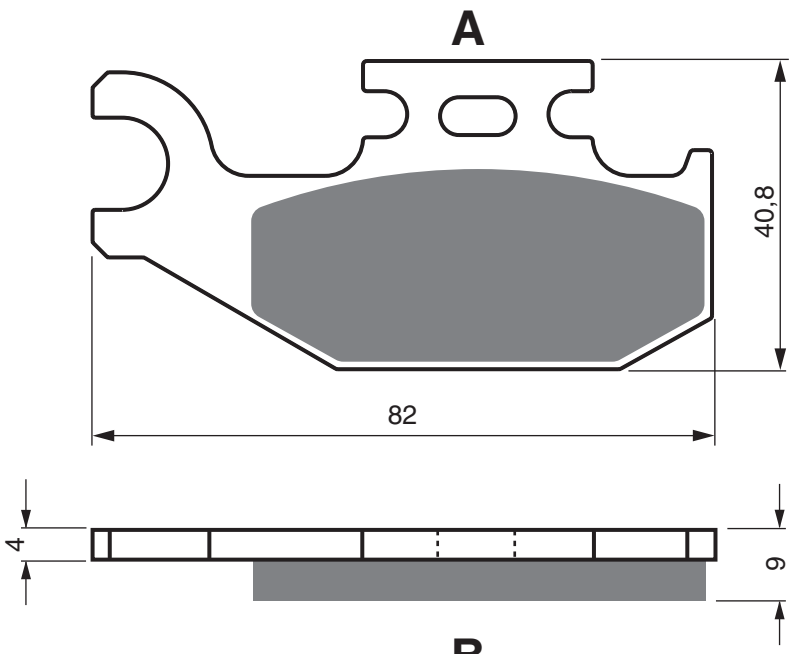

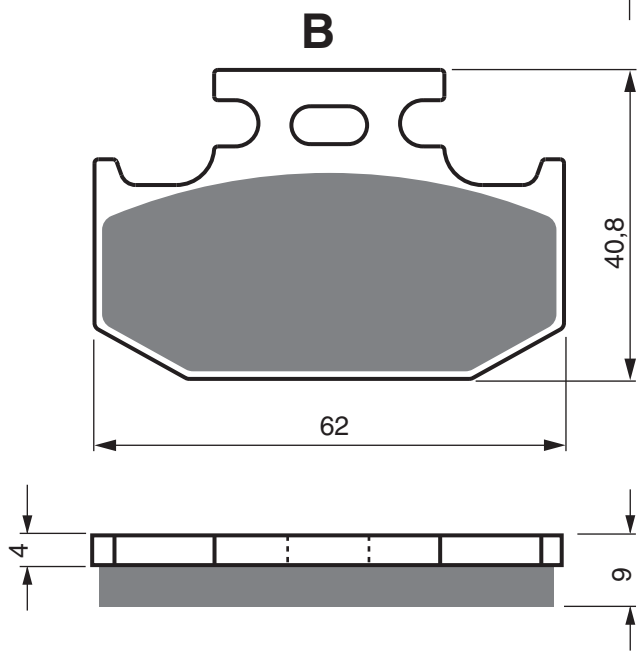

BOMBARDIER

	330	Outlander	2004 - 2004	FR	RR
	400	Outlander (4x4)	2003 - 2003	FR	RR
	500	Quest (all models)	2002 - 2002	FR	RR
	500	Traxter Max	2003 - 2005	FR	RR
	650	Outlander 4x4	2006 - 2006	FR	
	650	Quest (all models)	2002 - 2002	FR	RR
DS	650		2000 - 2002	FR	

CAN-AM

	400	Outlander (XT 4x4) (2E7A/B/C/D/E/F)	2007 - 2014	FR	
	400	Outlander EFi, STD (International only)	2015 - 2015	FR	
	400	Outlander Max (XT 4x4)(2G7A/B/C/D/E)	2007 - 2013	FR	
	400	Outlander (4x4 STD) (2D7A/B/C/D/E/F/G/H)	2007 - 2014	FR	
	500	Outlander (STD 4x4) (2T7A/B/C/D)	2007 - 2012	FR	
	500	Outlander (XT 4x4)(2U7A/B/C/D)	2007 - 2012	FR	
	500	Outlander Max (STD 4x4)(2W7A/B/C)	2007 - 2012	FR	
	500	Outlander Max (XT 4x4)(2X7A/B/C)	2007 - 2010	FR	
	500	Renegade (4x4/EFI)	2007 - 2015	FR	
	650	Outlander (STD 4x4)(2N7A/B/C/D/E/F/G/H)	2007 - 2012	FR	
	650	Outlander (XT 4x4)(2P7A/B/C/D/E/F)	2007 - 2012	FR	
	650	Outlander Max (STD 4x4)(2R7A/B/C/D/E/F/G/H/J/K)	2007 - 2012	FR	
	650	Outlander Max XT-P	2012 - 2012	FR	
DS	650	X (3B7A/B)	2007 - 2007	FR	
	800	Outlander (STD 4x4)(2H7A/B/C/D/E/F/G/H)	2007 - 2008	FR	

AD	K1	K5	S3	S33 RACING

PART NUMBER

205

800	Outlander (XT 4x4)(2J7A/B/C/D/E/F)	2007 - 2008	FR
800	Outlander Max (LTD 4x4)(2M7A/B/C)	2007 - 2012	FR
800	Outlander Max (STD 4x4)(2K7A/B/C/D/E/F/G/H/J)	2007 - 2012	FR
800	Outlander Max (XT 4x4)(2L7A/B/C/D/E/F)	2007 - 2008	FR
800	Outlander Max R EFI	2009 - 2012	FR
800	Outlander Max R XT	2009 - 2012	FR
800	Outlander R XT	2009 - 2010	FR
800	Outlander R EFi	2009 - 2009	FR
800	Outlander R Max XT-P	2012 - 2012	FR
800	Outlander R Xmr	2011 - 2012	FR
800	Outlander R Xxc	2011 - 2011	FR
800	Renegade R EFi	2009 - 2011	FR
800	Renegade R X	2009 - 2010	FR
800	Renegade R XXC	2011 - 2011	FR
800	Renegade (4x4/EFI)	2007 - 2008	FR
800	Renegade X (4x4/EFI)	2008 - 2008	FR
1 000	Maverick Max	2016 - 2017	RR
1 000	Maverick Max STD/XRS/DPS	2015 - 2016	RR
1 000	Maverick R STD	2014 - 2015	RR
1 000	Maverick R XMR	2014 - 2015	RR
1 000	Maverick R XRS	2014 - 2015	RR
1 000	Maverick R XRS/DPS	2014 - 2015	RR
1 000	Maverick R XXC	2014 - 2015	RR

CANNONDALE

440	Blaze	2001 - 2004	FR
440	Cannibal	2001 - 2004	FR
440	Glamis	2001 - 2004	FR
440	Moto	2002 - 2003	FR
440	Speed	2001 - 2004	FR

JOHN DEERE

500	/650 Buck EX/EXT	2004 - 2008	FR
500	/650 Trail Buck EX/EXT	2004 - 2005	FR

SUZUKI

LT-A	450	XK7	2007 - 2007	FR
LT-A	500	FK2 Vision 4WD	2002 - 2002	RR
LT-A	500	King Quad	2011 - 2011	FR
LT-A	700	King Quad	2005 - 2005	FR

EQUIVALENTS OEM

705 600 004	69100 03840	705 600 150	5UG W0045 00	705 600 350	1S3 W0046 00	75 601 147
44603 0580000						

PART NUMBER

206

AD | S3 | S33 RACING

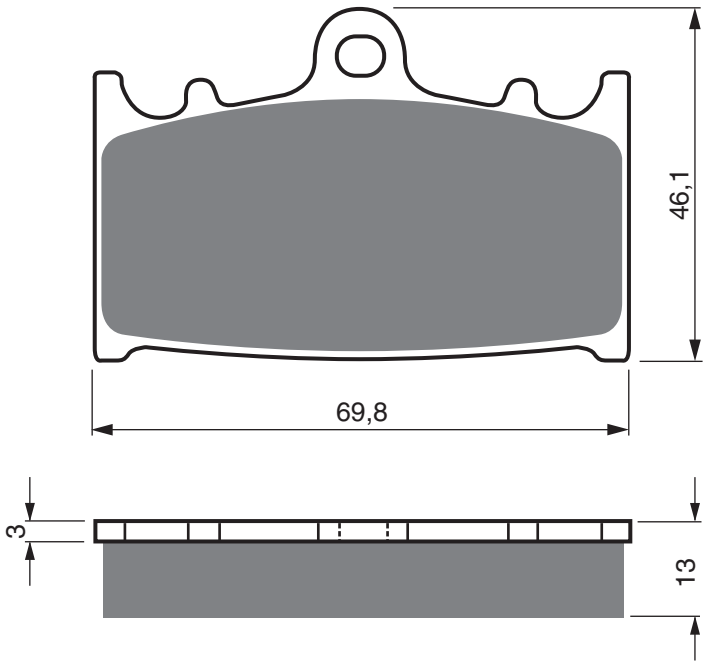

SUZUKI

VL	1 500	K2/K3 Intruder	2002 - 2003	RR
VL	1 500	K5/K6/K7/K8 (C1500) Intruder	2005 - 2008	RR
VL	1 600	K5/K6/K7/K8	2005 - 2008	RR

EQUIVALENTS OEM

6 910 010 820

AD	S3	S33 RACING	GP5	GP6	GP7	GPR

PART NUMBER

207

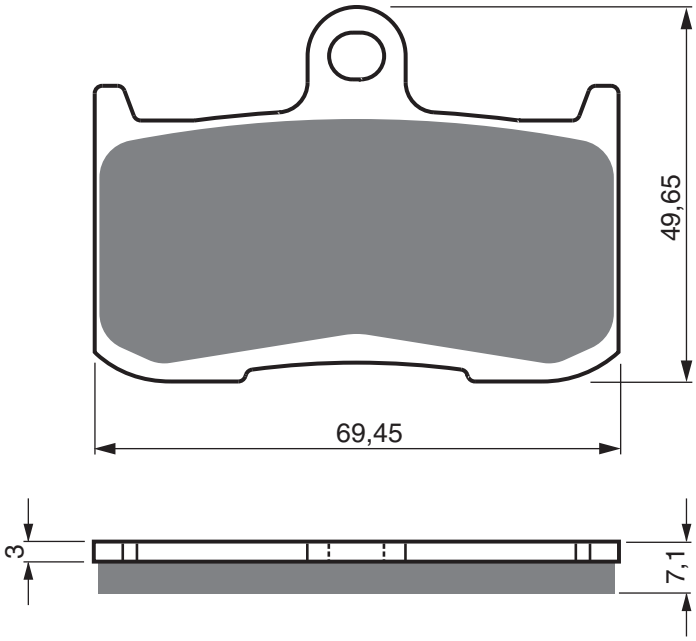

HONDA

RS	125	(Rad.cal.)	2004 - 2007	FL	
NSF	250	R (Moto 3)	2012 - 2013	FL	FR

INDIAN

		Chief Dark Horse	2014 - 2020	FL	FR
		Chieftain Dark Horse (Nissin Calipers)	2016 - 2020	FL	FR
		Chieftain Limited (Nissin Calipers)	2017 - 2020	FL	FR
		Roadmaster Classic (Nissin Calipers)	2017 - 2020	FL	FR
		Roadmaster Elite (Nissin Calipers)	2017 - 2020	FL	FR
		Springfield	2016 - 2020	FL	FR
		Springfield Dark Horse	2018 - 2020	FL	FR
	1 800	Chief Classic (Nissin Caliper)	2014 - 2020	FL	FR
	1 800	Chief Vintage (Nissin Caliper)	2014 - 2020	FL	FR
	1 800	Chieftain (Nissin Caliper)	2014 - 2020	FL	FR
	1 811	Roadmaster (Cast Wheel/Nissin Calipers)	2015 - 2020	FL	FR

KAWASAKI

Z	800	(Z 800 ADS/AEF/AFF) (Non ABS)	2013 - 2016	FL	FR
Z	800	(Z 800 BDS/BEF/BFF) (ABS Model)	2013 - 2016	FL	FR
Z	800	E (Z 800 DDS/DEF/DFF/DGF - ABS)	2013 - 2016	FL	FR
Z	900	(ZR 900 AHF/AJF) (Non ABS)	2017 - 2020	FL	FR
Z	900	(ZR 900 BHF/BJF/DJF) (ABS)	2017 - 2020	FL	FR
Z	900	RS ABS (ZR 900 CJF/EJF ABS)	2018 - 2021	FL	FR
Z	900	RS Café (CJFA/CJFB) (ABS)	2018 - 2020	FL	FR
ZX-9R	900	Ninja (ZX900C/H884)	2002 - 2003	FL	FR
ZX9R	900	(ZX 900 F1/F2)	2002 - 2004	FL	FR
Z	1 000	(ZR1000 A1/A2/A3)	2003 - 2005	FL	FR

MORIWAKI

MD	250	H/S	2008 - 2013	FL	

SUZUKI

GSX-S	750	AL7/AZL7/AL8/AZL8/AL9/AZL9	2017 - 2021	FL	FR
GSX	1 300	B-King (BKK8/BKK9/BKL0/BKL1)	2008 - 2012	FL	FR

TRIUMPH

	675	Daytona	2006 - 2008	FL	FR
	675	Street Triple R	2009 - 2012	FL	FR
	675	Street Triple RX (Nissin F/Brembo R Calipers)	2015 - 2016	FL	FR
	1 050	Speed Triple (Nissin Radial Caliper F/Caliper/220mm R/ Disc)	2005 - 2006	FL	FR
	1 050	Tiger (Radial Caliper)	2007 - 2011	FL	FR
	1 050	Tiger SE (ABS)	2010 - 2013	FL	FR
	1 050	Tiger Sport (ABS)	2013 - 2018	FL	FR

VICTORY

		Broadwalk (Spoke Wheels)	2013 - 2015	FR	
		Magnum X-1	2015 - 2017	FL	FR
		Vegas Jackpot	2008 - 2012	FL	FR
		Vegas Jackpot	2013 - 2014	FL	FR
	1 634	Hammer	2008 - 2011	FL	FR
	1 634	Hammer 8-Ball	2010 - 2016	FL	FR
	1 634	King Pin	2008 - 2012	FL	FR
	1 634	King Pin 8-Ball	2008 - 2012	FL	FR
	1 634	King Pin Low	2009 - 2009	FL	FR
	1 634	Vegas	2008 - 2012	FL	FR
	1 634	Vegas 8-Ball	2008 - 2017	FL	FR
	1 634	Vegas Low	2008 - 2009	FL	FR
	1 731	Boardwalk (Spoke Wheels)	2013 - 2015	FL	
	1 731	Cory Ness Cross Country	2011 - 2012	FL	FR
	1 731	Cory Ness Jackpot	2008 - 2010	FL	FR
	1 731	Cross Country	2010 - 2017	FL	FR
	1 731	Cross Country 8-Ball	2015 - 2016	FL	FR
	1 731	Cross Country Touring	2012 - 2017	FL	FR
	1 731	Cross Roads	2010 - 2012	FL	FR
	1 731	Cross Roads 8-Ball	2014 - 2015	FL	FR
	1 731	Cross Roads 8-Ball (Cast Wheel)	2014 - 2014	FL	FR
	1 731	Cross Roads Classic	2013 - 2014	FL	FR
	1 731	Cross Roads Classic (Spoke Wheel)	2013 - 2014	FL	FR
	1 731	Cross Touring	2013 - 2017	FL	FR
	1 731	Gunner	2015 - 2017	FL	
	1 731	Hammer	2009 - 2011	FL	FR
	1 731	Hammer S	2008 - 2017	FL	FR
	1 731	Hard Ball (Spoke Wheel)	2012 - 2013	FL	FR
	1 731	Highball (Spoke&Cast Wheel)	2012 - 2017	FL	FR
	1 731	Jackpot	2007 - 2016	FL	FR
	1 731	Judge	2013 - 2017	FL	FR
	1 731	Magnum	2015 - 2017	FL	FR
	1 731	Zach Ness Vegas	2011 - 2011	FL	FR

YAMAHA

TZ	250	(Radial Caliper)	2002 - 2010	FL	FR

EQUIVALENTS OEM

43082 1290	43082 0002	5KE W0045 00	T 2020 329	T 2020 475	59100 23830	06455 NX4 860
59100 23840	45105 NX7 006	06455 NX7 006	43082 0129	43082 0168		

PART NUMBER

208

AD	K1	K5	S3	S33 RACING

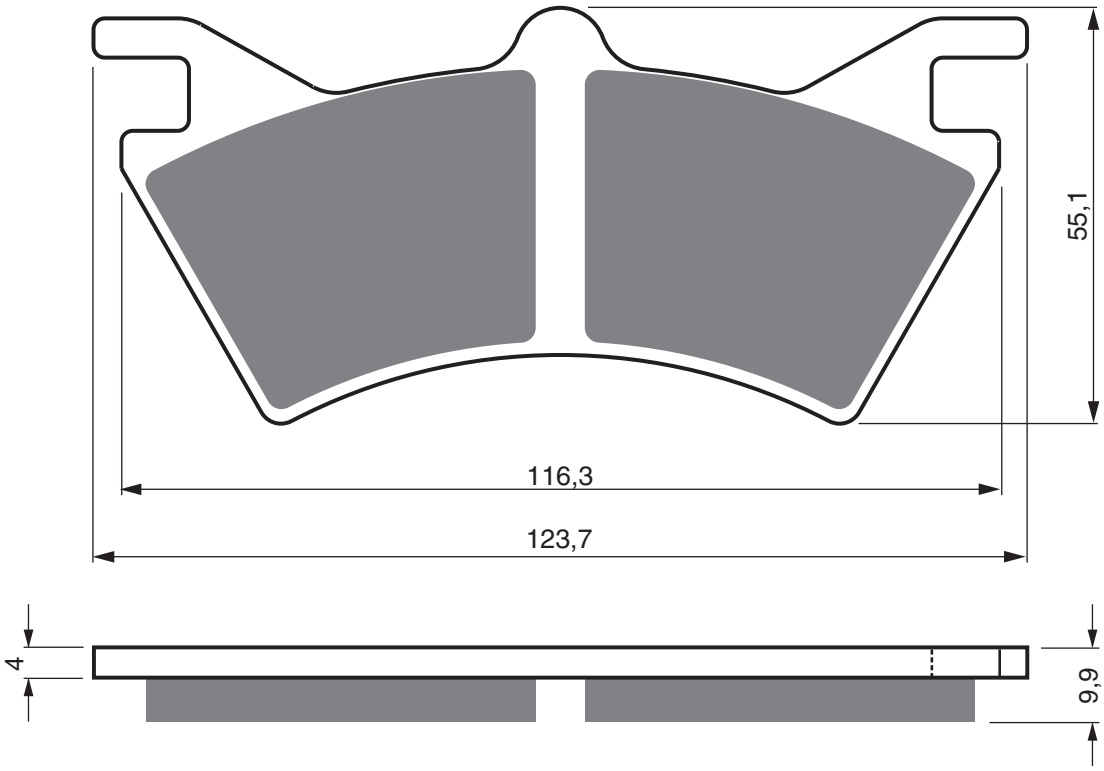

POLARIS

		Sportsman 6x6	2000 - 2003	RR
PPS		/PTV 6x6/Series 10		RR
PPS		LUH 6x6	2002 - 2002	RR
PTV		6x6	2003 - 2003	RR
	500	Sportman 6x6	2000 - 2008	RR

EQUIVALENTS OEM

2201685	2201749	1910450V

AD	K1	K5	K5-LX	S3	S33 RACING

PART NUMBER

209

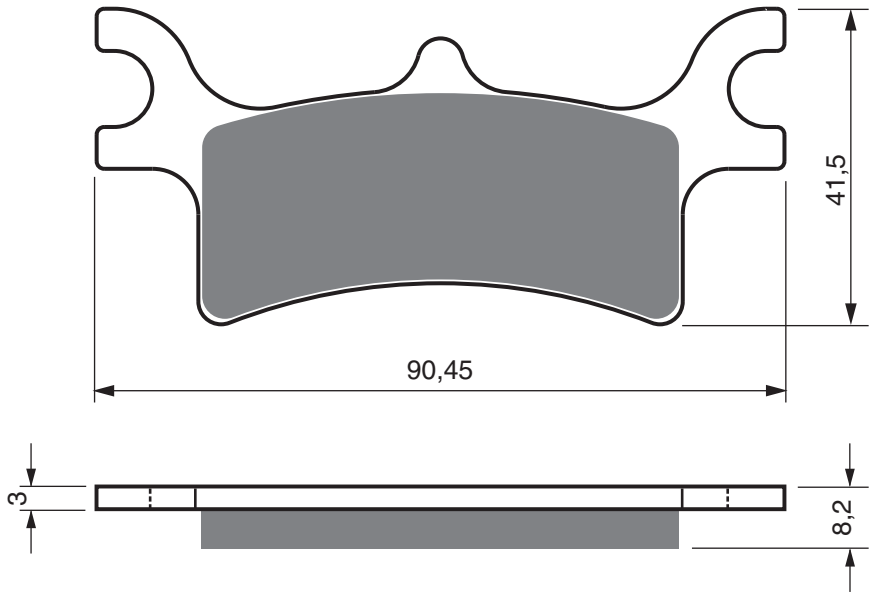

POLARIS

PPS		/PTV 4x4/Series 10		RR
	250	Trail Blazer	2005 - 2006	RR
	325	Magnum (2x4) HDS)	2002 - 2002	RR
	325	Magnum 4x4 (A02CD32AA/AB/AC)	2002 - 2002	RR
	325	Magnum 4x4 HDS (A02CD32FB)	2002 - 2002	RR
	325	Xpedition	2002 - 2002	RR
	330	Magnum (2x4/HDS)	2003 - 2006	RR
	330	Magnum (4x4/HDS)	2003 - 2004	RR
	330	Trail Blazer	2008 - 2009	RR
	330	Trail Blazer	2010 - 2013	RR
	330	Trail Boss	2005 - 2009	RR
	330	Trail Boss	2010 - 2013	RR
	330	Trial Blazer	2008 - 2013	RR
	330	Trial Boss	2005 - 2013	RR
	350	Big Boss L	1993 - 1993	RR
	350	L 2x4/4x4	1990 - 1990	RR
	350	L 4x4	1993 - 1993	RR
	350	Sportsman 4x4	1993 - 1993	RR
	350	Trail Boss L 2x4	1991 - 1993	RR
	350	Trail Boss L 4x4	1991 - 1991	RR
	400	Big Boss L 6x6	1994 - 1997	RR
	400	L 2x4	1994 - 1995	RR
	400	L 4x4	1994 - 1994	RR
	400	Sportsman	2003 - 2005	RR
	450	Sportsman	2006 - 2007	RR
	500	Magnum (4x4 HDS)	2002 - 2003	RR
	500	Scrambler 2x4	2007 - 2008	RR
	500	Scrambler 4x4	2005 - 2012	RR
	500	Sportsman EFI Quad H.O.	2008 - 2013	RL
	500	Sportsman EFI Quad H.O.	2008 - 2013	RR
	500	Sportsman EFi/HO	2007 - 2008	RL
	500	Sportsman EFi/HO	2007 - 2008	RR
	500	Sportsman Forest	2012 - 2012	RR
	500	Sportsman HO/EFi	2003 - 2006	RL
	500	Sportsman HO/EFi	2003 - 2006	RR
	500	Sportsman Touring EFi	2008 - 2011	RR
	500	Sportsman X2	2006 - 2008	RL
	500	Sportsman X2	2006 - 2008	RR
	500	Xplorer 4x4	1997 - 1997	RR
ATV	500	Pro 4x4 TPS	2002 - 2002	RR
	600	Sportsman 4x4	2003 - 2005	RR
	700	Sportsman (4x4)/EFI	2002 - 2006	RR
	700	Sportsman EFi	2007 - 2007	RR
	700	Sportsman MV	2005 - 2006	RR
	800	Sportsman Big Boss /6x6 / EDi	2009 - 2012	RR
	800	Sportsman EFi	2005 - 2006	RR
	800	Sportsman EFi Intl/HO	2007 - 2011	RR
	800	Sportsman HO/EFi (Up to 15/12/2008)	2008 - 2008	RR

EQUIVALENTS OEM

2201871	2202414	1910683

PART NUMBER

210

AD | S3 | GP5

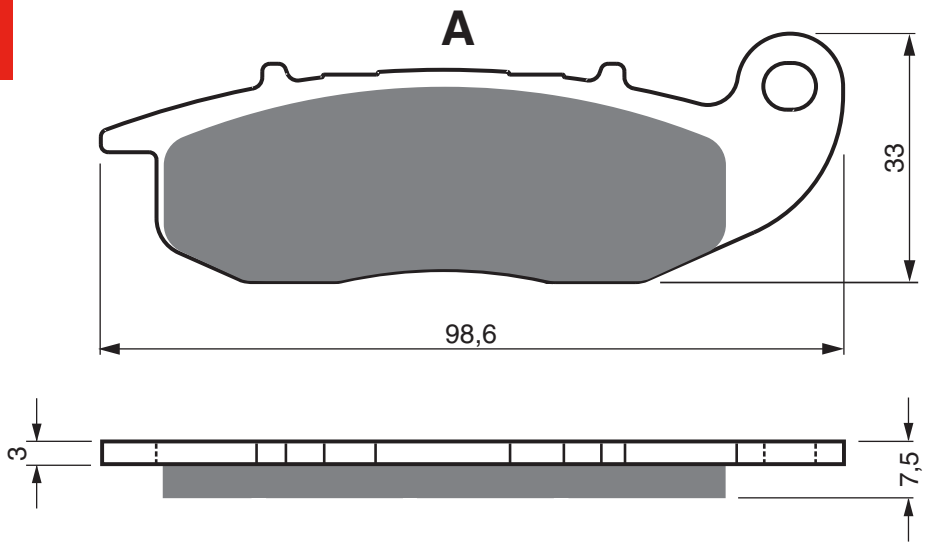

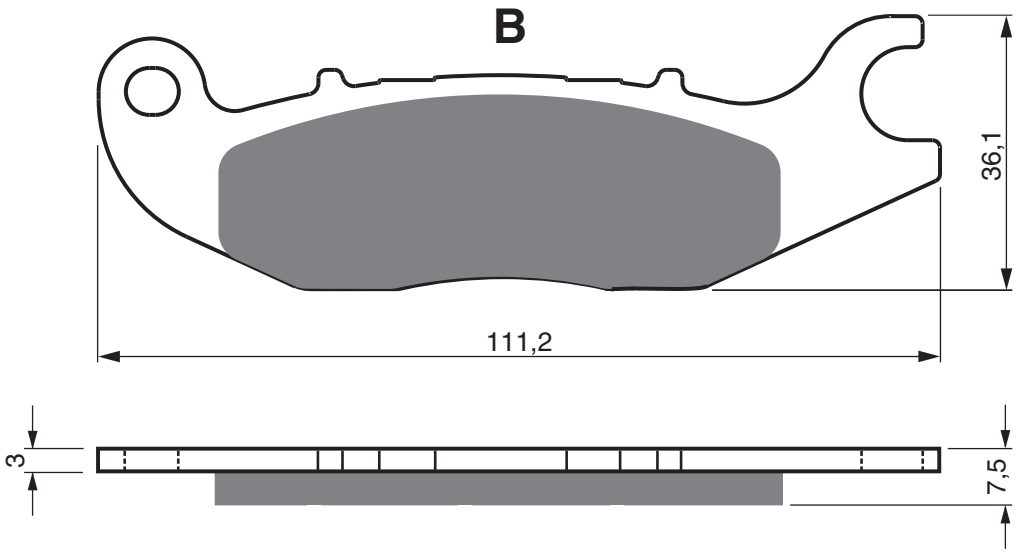

AJS

CR3	125	Regal Raptor	2006 - 2006	FL

HERO

ZMR	230	Karizma	2011 - 2012	FL

HONDA

ANF	125	3/5/T5/T6/7/A Innova	2003 - 2011	FL
CBF	125	M9/MA/MB/MD/ME	2009 - 2015	FL
CBR	125	R4/R5/RS5/RS6	2004 - 2006	FL
CBR	125	R4/R5/RS5/RW5/RW6/RW7/RW8/RW9/RWA (6 Bolt Front Disc / Canada)	2004 - 2010	FL
CBR	125	RW7/RW8/RW9/RWA (6 Bolt Front disc fixing)	2007 - 2010	FL
CBR	125	RWB/RC/RD/RF/RG (5 Bolt Front Disc)	2011 - 2016	FL
FS	125	Sonic	2003 - 2004	RR
MSX	125	AG/AH Grom (ABS)	2018 - 2021	FL
MSX	125	D/E/F/G/H Grom (Non ABS)	2013 - 2021	FL
Z	125	Monkey M AC	2018 - 2021	FL
CBR	150	R	2000 - 2003	FL

LIFAN

	50	Smart		FL
	125	Smart		FL

RIEJU

NKD	50		2008 - 2010	FL
RS2	50	FR	2009 - 2010	FL
RS2	50	Matrix/Pro	2007 - 2010	FL
NKD	125		2008 - 2010	FL
RS2	125	/ Pro	2007 - 2010	FL

SUPERBYKE

CQ	50	Road Classic		FL
CU	125	Road Classic		FL

EQUIVALENTS OEM

06455 KPH 951	06455 KPP 901	06455 KWF 951	0000 640 7210

AD | S3 | S33 RACING

PART NUMBER

211

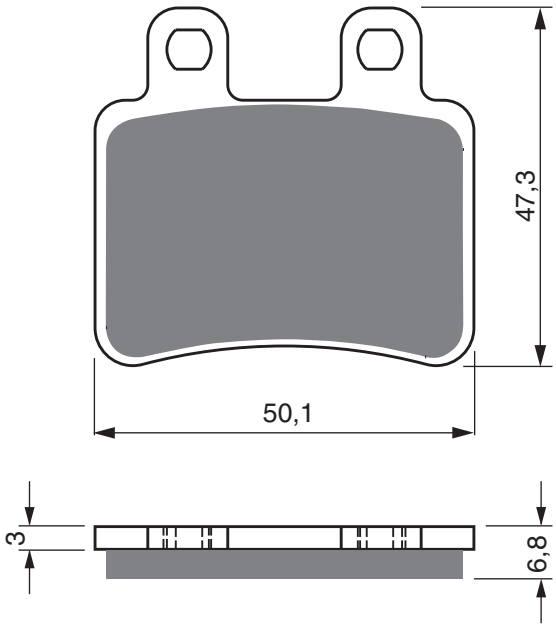

CPI

SM	250		2009 - 2012	RR
SX	250		2009 - 2012	RR

DERBI

DRD	50	Senda Evo SM (Cast wheels)	2008 - 2011	RR
DRD	50	Senda Pro R Radial Caliper (260mm disc)	2005 - 2013	RR
DRD	50	Senda Pro SM Radial Caliper (300mm disc)	2005 - 2014	RR
	125	Boulevard	2003 - 2007	FL
	125	Cross City	2007 - 2008	RR
	125	Cross City	2009 - 2014	RR
	125	Senda Baja R (4T) (260mm disc)	2006 - 2012	RR
	125	Senda Baja SM (4T) (300mm disc)	2006 - 2012	RR
	125	Senda R VIN # SCA1A	2004 - 2004	RR
	125	Senda R VIN # SCB1A	2004 - 2004	RR
	125	Senda SM (Twin Headlight)	2004 - 2007	RR
GP1	125	Racing (Low seat/Radial Caliper / 6 bolt disc fixing)	2007 - 2009	RR
	150	Boulevard	2003 - 2007	FL
	200	Boulevard	2005 - 2005	FL
GP1	250	Racing (Low seat/Radial caliper 6 bolt disc fixing)	2007 - 2009	RR

HM

CRE	50	Baja RR Up to ZEN50XACEA7700324	2007 - 2009	RR
CRE	50	Baja/Six/Derapage	2003 - 2009	RR
CRE	50	Derapage RR Up to ZEN50XACMA7700384	2007 - 2009	RR

ITALJET

	50	/125/150 Jet Set	2002 - 2003	FL
	100	/125/150 Millennium	2002 - 2004	FL

MALAGUTI

X3M		Enduro (Spoke wheel)	2008 - 2010	FL

MASH

	250	Two Fifty	2014 - 2016	RR

MBK

		X-Limit Enduro	2003 - 2009	FL RR
		X-Limit Supermoto	2003 - 2009	RR

PEUGEOT

	50	Elystar TSDi	2002 - 2007	RR
	125	Elyseo (Rear Disc Model)	2003 - 2003	RR
	125	Elystar (3 bolt fixing - front disc)	2002 - 2005	RR
	125	Elystar (5 bolt fixing - front disc)	2006 - 2007	RR
	125	Geopolis Executive/Non ABS (AJP Calipers)	2007 - 2012	RR
	125	Geopolis Urban (AJP Caliper/ABS)	2007 - 2012	RR
	125	Jet Force (All Models)	2003 - 2007	RR
	125	Satelis Blacksat (AJP Caliper)	2010 - 2012	RR
	125	Satelis 4V Executive/Premium/City (4Stroke/4Valve)	2006 - 2009	RR
	125	Satelis Compressor (4T) (all models)	2006 - 2011	RR
	125	Satelis RS (AJP Caliper)	2007 - 2012	RR
	125	Satelis Urban (AJP Caliper/ABS)	2007 - 2012	RR
	125	Satelis Whitesat (AJP Caliper)	2010 - 2011	RR
	150	Elystar (3 bolt fixing - front disc)	2002 - 2005	RR
	150	Elystar (5 bolt fixing - front disc)	2006 - 2007	RR
	250	Geopolis Urban (AJP Caliper/ABS))	2007 - 2010	RR
	250	Geopolis (Executive/AJP/ Calipers/Non ABS)	2007 - 2010	RR
	250	Satelis Urban (AJP Caliper/ABS)	2007 - 2012	RR
	400	Geopolis (Urban / AJP Calipers /ABS)	2007 - 2012	RR

RIEJU

	50	Tango (2T)	2007 - 2012	RR
	50	Tango (2T)	2013 - 2015	RR
	50	Tango (Spoke wheel)	2011 - 2011	RR
	50	Tango Motard	2009 - 2010	RR
RS2	50	Matrix	2002 - 2008	RR
	125	Tango	2006 - 2010	RR
	125	Tango (4T)	2011 - 2020	RR
	125	Tango Pro	2007 - 2010	RR
NKD	125		2006 - 2007	RR
RS2	125		2006 - 2008	RR
SMX	125		2002 - 2007	RR
SMX	125		2007 - 2008	RR
	250	Tango	2008 - 2011	RR
	250	Tango	2012 - 2015	RR

SCORPA

	125	T-Ride F (Enduro)	2010 - 2010	RR
	250	T-Ride F (Enduro)	2008 - 2010	RR

SHERCO

	50	Enduro (Urban/SU (2T) (Spoke Wheel)	2008 - 2013	RR
SM	50	Black Panter	2008 - 2010	RR
SM	50	Supermotard	2008 - 2013	RR
SU	50	Urban Base (2T) (Cast wheels)	2010 - 2010	RR
	125	City Corp (All Models)	2008 - 2008	RR
SE	125	F Enduro (4T)	2010 - 2012	RR
SM	125	F Black Panther (4T)	2010 - 2012	RR

YAMAHA

DT	50	R	2002 - 2008	FL RR
DT	50	X (Supermotard)	2004 - 2008	RR
XT	125	R (3D61/3D63/13D1/13D3/13D5)	2005 - 2012	FL RR
XT	125	X (13D2/13D4/13D6)	2007 - 2011	RR
XT	125	X (3D62/3D64)	2005 - 2006	RR

EQUIVALENTS OEM

745658	4722090	755981 1160	00G01202221	3D6 F5811 00	1D4 F5742 00	00H01304931
K01303070	7588626	00H01302551	862900	S11D 40202 00	11967300	1160
PE 745658	0/000 930 7001	114140003300A				

PART NUMBER

212

AD	S3	S33 RACING	GP5	GP6	GP7	GPR

A

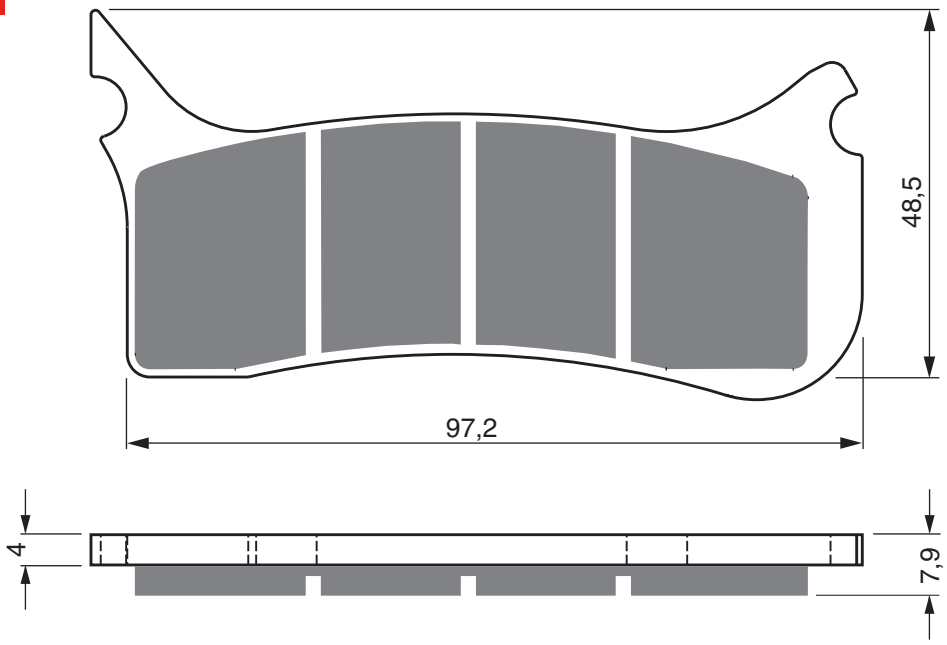

B

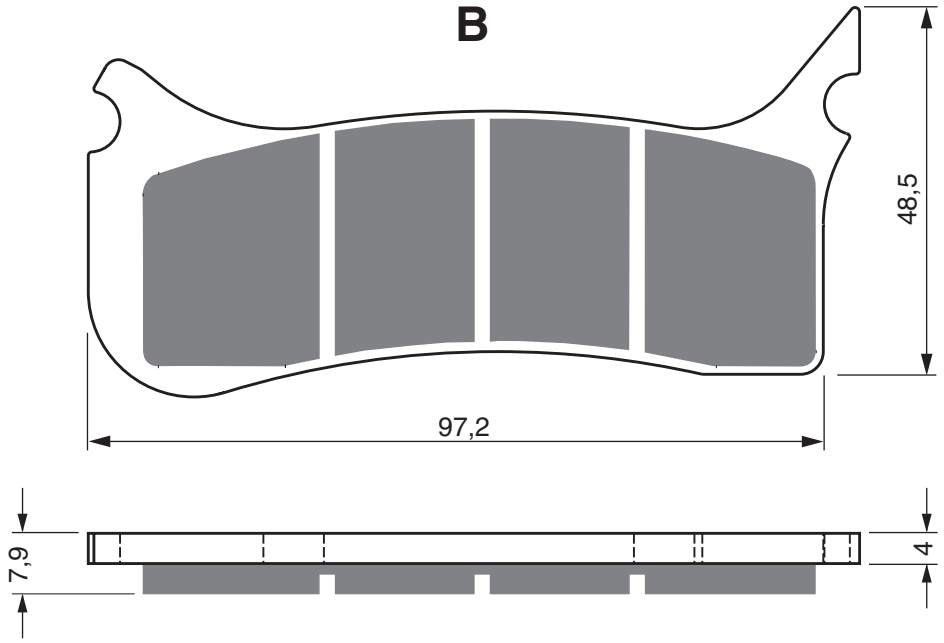

FOR BERINGER

	6 Piston (New Design)		FL

FTE

	Piston Radial Supermoto		FL

HUSABERG

FS	Supermotard models	2004 - 2004	FL

KTM

SMR	450	2004 - 2004	FL
SMR	525	2004 - 2004	FL

EQUIVALENTS OEM

800 13 030 000	1100 S/R2

Disc Brake Pads

AD	S3	S33 RACING	GP5	GP6	GP7	GPR

PART NUMBER

213

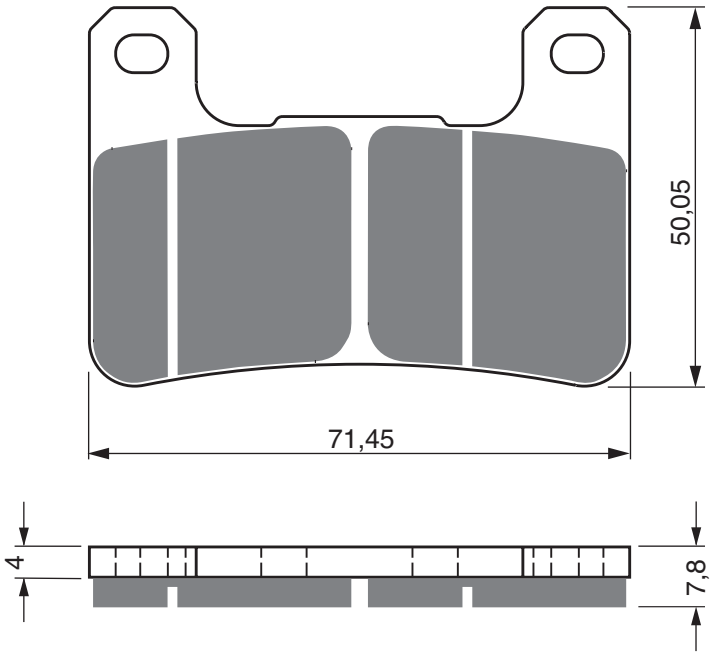

KAWASAKI

ZX-25	250	Ninja	2020 - 2020	FL	
Z	900	Café	2018 - 2020	FL	FR
Z	900	RS	2018 - 2020	FL	FR
H2	1 000	Ninja H2 SX (ZX1002 AJF)	2018 - 2020	FL	FR
H2	1 000	Ninja H2 SX SE (ZX1002 BJF)	2018 - 2020	FL	FR
KLX	1 000	Versys SE LT ABS	2018 - 2020	FL	FR
KLX	1 000	Versys SE LT+ ABS	2018 - 2020	FL	FR
Z	1 000	(Rad.cal.)	2014 - 2014	FL	FR
Z	1 000	(ZR1000 DAF/DBF/DCF/DDF/FEF/FFF)	2010 - 2015	FL	FR
Z	1 000	ABS (ZR1000 EAF/EBF/ECF/EDF/GEF/GFF)	2010 - 2015	FL	FR
Z	1 000	Black Edition (ZR1000 DCFA/DDFA/FEFA)	2012 - 2015	FL	FR
Z	1 000	EAF/EBF/ECF/ECFA/EDF/EDFA (ABS/300mm Discs)	2010 - 2021	FL	FR
Z	1 000	FEF/FEFA/FFF/FGF (Non ABS/310mm Discs)	2014 - 2021	FL	FR
Z	1 000	GEF/GEFA/GFF/GGF/HHF/HJF (ABS/310mm Round Discs)	2014 - 2020	FL	FR
Z	1 000	SE (Rad.cal.)	2014 - 2014	FL	FR
Z	1 000	Special Edition (ZR 1000 GEFA)	2014 - 2014	FL	FR
Z	1 000	SX ABS Model (ZX 1000 MEF/MFF/MGF/WHF/WJF)	2014 - 2018	FL	FR
Z	1 000	SX Tourer	2014 - 2014	FL	FR
ZX-10R	1 000	(ZX 1000 JBF/JCF/JDF/JEF/JFF)	2011 - 2015	FL	FR
ZX-10R	1 000	30th Anniversary Edition (ABS) (ZX 1000 KFFA)	2015 - 2015	FL	FR
ZX-10R	1 000	30th Anniversary Edition (Non ABS) (ZX 1000 JFFA)	2015 - 2015	FL	FR
ZX-10R	1 000	ABS (ZX 1000 KBF/KCF/KDF/KEF/KFF)	2011 - 2015	FL	FR
ZX-10R	1 000	Ninja (Rad.cal.)	2010 - 2011	FL	FR
	1 000	Ninja SX	2021 - 2021	FL	FR

SUZUKI

GSX-R	600	K4/K5	2004 - 2005	FL	FR
GSX-R	600	K6/K7	2006 - 2007	FL	FR
GSX-R	600	K8/K9/L0	2008 - 2010	FL	FR
GSX-R	750	K4/K5	2004 - 2005	FL	FR
GSX-R	750	K6/K7	2006 - 2007	FL	FR
GSX-R	750	K8/K9/L0	2008 - 2010	FL	FR
DL	1 000	AL4/AL5/AL6/AL7/AL8/AL9 V-Strom (ABS)	2014 - 2020	FL	FR
DL	1 000	XT V-Strom (XAL8/XAL9) (ABS)	2018 - 2020	FL	FR
GSX-R	1 000	K4	2004 - 2004	FL	FR
GSX-R	1 000	K5/K6	2005 - 2006	FL	FR
GSX-R	1 000	K7/K8	2007 - 2008	FL	FR
GSX-R	1 000	K9/L0/L1	2009 - 2011	FL	FR
DL	1 050	V-Strom (ABS)	2021 - 2021	FL	FR
DL	1 050	V-Strom XT (ABS)	2021 - 2021	FL	FR
DL	1 050	V-Strom XT Tour (ABS)	2021 - 2021	FL	FR
GSX-R	1 300	RK8/RK9/RL0/RL1/RL2 Hayabusa	2008 - 2012	FL	FR
M	1 800	R (VZR 1800 K6/K7/K8/K9) Intruder - Handlebar Cowling	2006 - 2009	FL	FR
M	1 800	R2 (VZR 1800 NK8/NK9) Intruder - No Handlebar Cowling	2008 - 2009	FL	FR
M	1 800	RZ (VZR 1800 ZK7/ZK8/ZL1/ZL2) Intruder - with handlebar cowling	2007 - 2013	FL	FR
VZR	1 800	BZL4/BZL5/BLZ6/BLZ7/BLZ8 - M1800 RB	2014 - 2018	FL	FR
VZR	1 800	K6/K7/K8 (M1800 R Intruder)	2006 - 2009	FL	FR
VZR	1 800	RZK8 Intruder M1800 R2/M109 R2	2008 - 2009	FL	FR

EQUIVALENTS OEM

43082 0091	59100 29820	59100 29840	59100 29850	59100 47890	43082 0113	107 A486 51
43082 0144	43082 0147	59100 29860				

PART NUMBER

214

AD	S3	S33 RACING	GP5	GP6	GP7	GPR

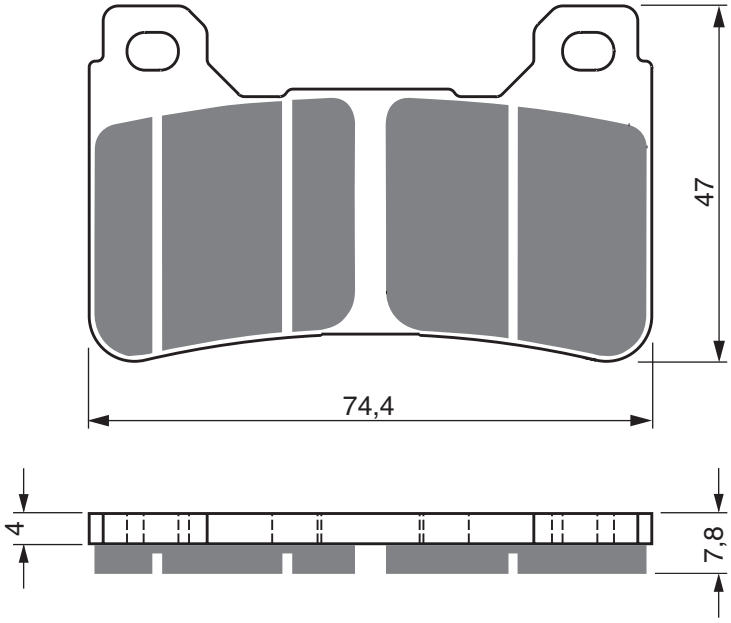

HONDA

CBR	600	RA9/RAA/RAB/RAC/RAD/RAG (C-ABS)	2009 - 2016	FL	FR
CBR	600	RR Hannspree	2008 - 2008	FL	FR
CBR	600	RR5/RR6 (Radial Caliper)	2005 - 2006	FL	FR
CBR	600	RR7/RR8/RR9/RAA/RRB/RRC/RRD/RRE/RRF/RRG (Radial Caliper)	2007 - 2016	FL	FR
VFR	800	F (ABS)	2014 - 2018	FL	FR
VFR	800	XF/XG (Crossrunner/ABS)	2015 - 2016	FL	FR
CB	1 000	R (Non ABS Model)	2009 - 2015	FL	FR
CBR	1 000	RA9/RAA/RAB/RAC/RAD/RAE/RAF/RAG/RAH/RAJ (C-ABS) Fireblade	2009 - 2016	FL	FR
CBR	1 000	RR4/RR5 Fireblade	2004 - 2005	FL	FR
CBR	1 000	RR6/RR7 Fireblade	2006 - 2007	FL	FR
CBR	1 000	RR8/RR9/RRA/RRB/RRC/RRD/RRE/RRF/RRG Fireblade (Non ABS)	2008 - 2016	FL	FR
CB	1 100	RS	2017 - 2017	FL	FR

YAMAHA

YZF-R1	1000	Mission	2020 - 2020	FL	FR

EQUIVALENTS OEM

06455 MEL 003	06455 MEL 013	06455 MFJ D01	06455 MEL D22	06455 MJF D02	107 A486 48	06455 MJM D31

AD | S3

PART NUMBER

215

A

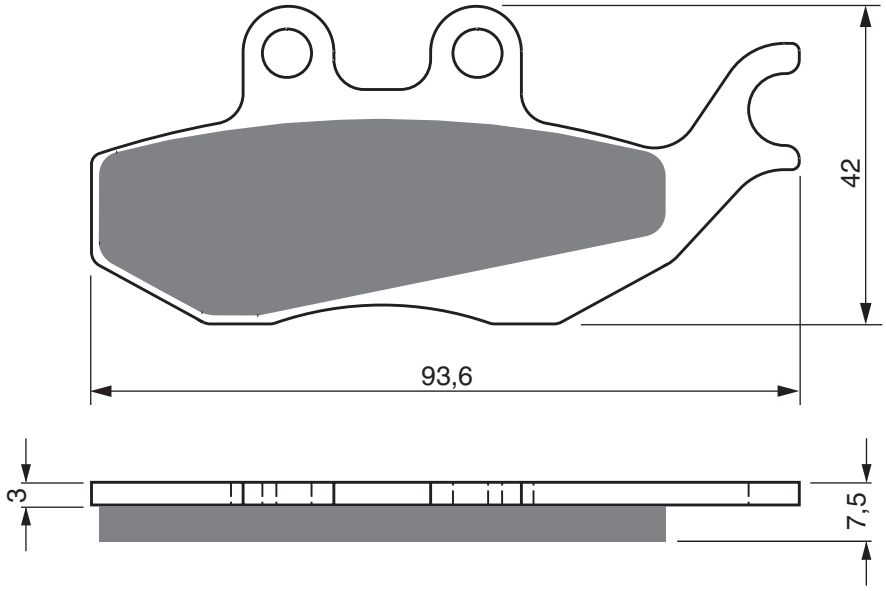

B

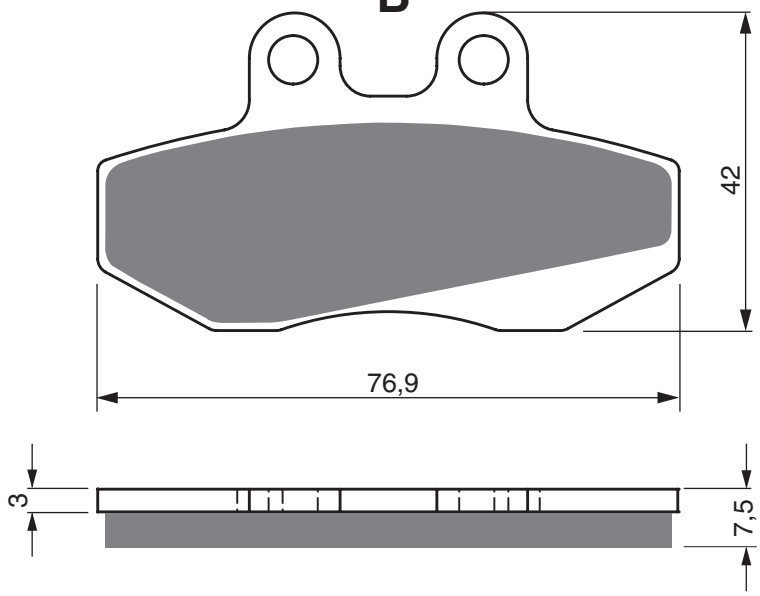

ITALJET

	250	Jupiter	2002 - 2003	RR

RIEJU

NKD	50		2007 - 2007	FL
RS2	50	Matrix	2002 - 2008	FL
RS3	50		2011 - 2020	FL
RS3	50	Pro	2011 - 2020	FL
NKD	125		2006 - 2007	FL
RS2	125		2006 - 2008	FL
RS3	125	(Sport)	2011 - 2020	FL

EQUIVALENTS OEM

4716610	00009307000

PART NUMBER

216

AD | K1 | K5 | S3

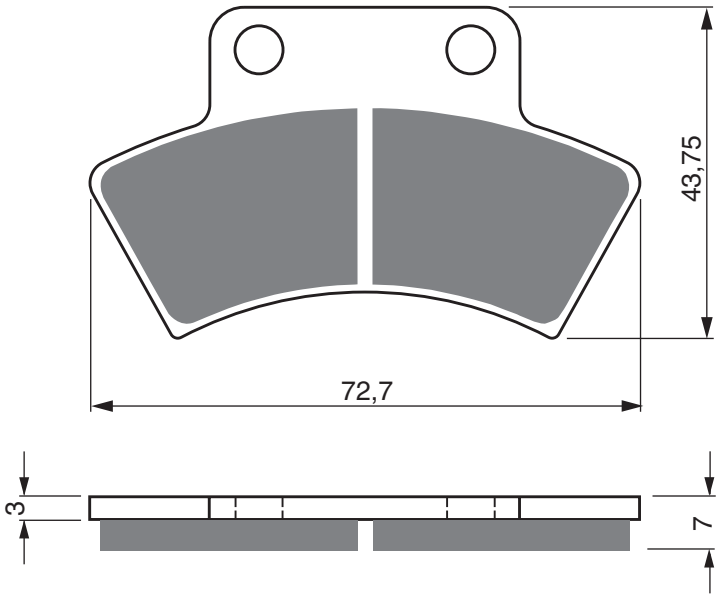

APACHE

	50	Mini Tomahawk (2T)	2008 - 2009	RR

CF MOTO

CF	500	-5 (Rancher UTV)	2011 - 2014	PB
CF	500	5B/5C - C/Force Classic	2014 - 2015	PB
CF	500	C/Force (X5 Terralander)	2011 - 2015	PB
CF	625	C/Force (X6 Terralander)	2011 - 2015	PB

JORDAN

	50	Bob	2003 - 2004	RR
	50	Hipo	2003 - 2004	RR
	50	Mars	2003 - 2004	RR
	90	Bob	2003 - 2004	RR
	90	Hipo	2003 - 2004	RR
	90	Mars	2003 - 2004	RR
	100	Bob	2003 - 2004	RR
	100	Hipo	2003 - 2004	RR
	100	Mars	2003 - 2004	RR

POLARIS

		Rear pad most models	1989 - 2000	RR
		Trail Blazer	1990 - 1993	RR
	250	2x4/4x4	1990 - 1990	RR
	250	2x4/4x4	1993 - 1993	RR
	250	Big Boss 4x6	1989 - 1992	RR
	250	Big Boss 6x6	1991 - 1993	RR
	250	Trail Blazer	1994 - 1998	RR
	250	Trail Boss	1991 - 1999	RR
	250	Trail Boss 2x4/4x4	1988 - 1989	RR
	250	Trail Boss 4x4	1987 - 1987	RR
	300	2x4/4x4	1994 - 1995	RR
	300	Big Boss 6x6	1994 - 1994	RR
	300	Xplorer 4x4	1996 - 2000	RR
	300	Xpress 2x4	1998 - 2000	RR
	300	Xpress L	1996 - 1997	RR
	400	Scrambler L 4x4	1995 - 1997	RR
	400	Sport L	1994 - 1998	RR
	400	Sportsman L 4x4	1994 - 1997	RR
	400	Xplorer L 4x4	1995 - 1998	RR
	425	Magnum (2x4/4x4)	1995 - 1998	RR
	425	Magnum 6x6	1996 - 1997	RR
	500	Big Boss 6x6	1998 - 1999	RR
	500	Scrambler 4x4	1997 - 1997	RR
	500	Sportsman 4x4	1996 - 1997	RR

QUADZILLA

RS5		4 WD	2010 - 2011	PB
RS6		EFi 4WD	2010 - 2011	PB
R	50	(Rear disc model)	2003 - 2006	RR
CUV	500	Side x Side	2010 - 2011	PB
QZ	500	E/ES 4x4	2010 - 2011	PB

EQUIVALENTS OEM

1910032	1910051	1930626	1930644	1930741	2200418	2200464
901 08 03 22	B840F6600000	2200899				

GP5 | GP6 | GP7

PART NUMBER

218

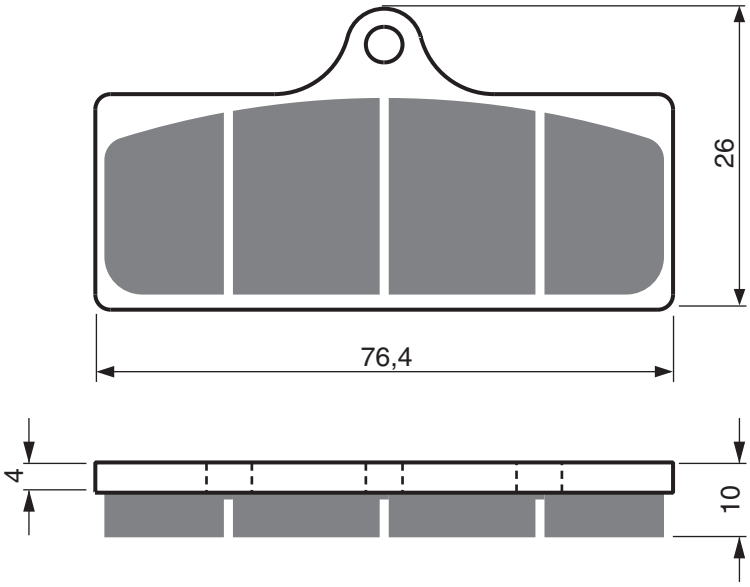

AP RACING

CP-4488 Radial 4 piston Monoblock	FL	FR

PART NUMBER

219

GP5 | GP6 | GP7

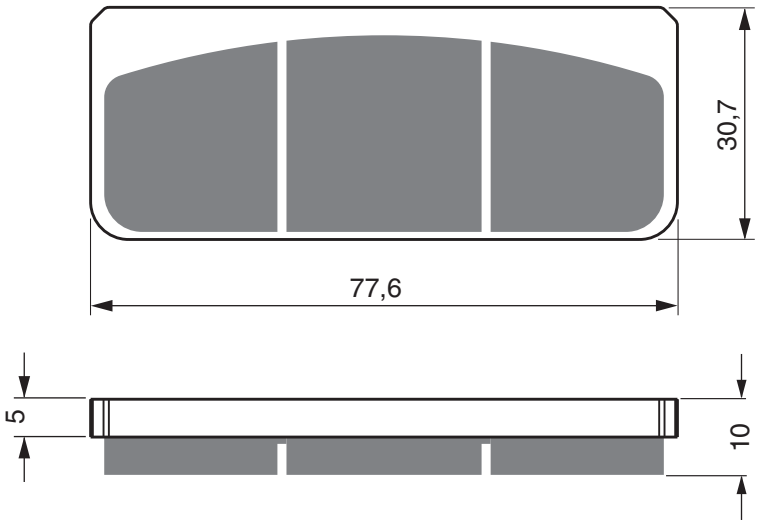

NISSIN

Racing 3910 FL

S3 | GP5 | GP6 | GP7

PART NUMBER

220

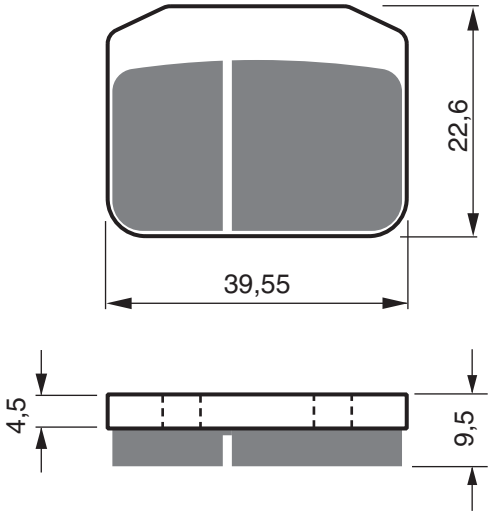

NISSIN

Racing 4808 FL

PART NUMBER

221

AD | S3

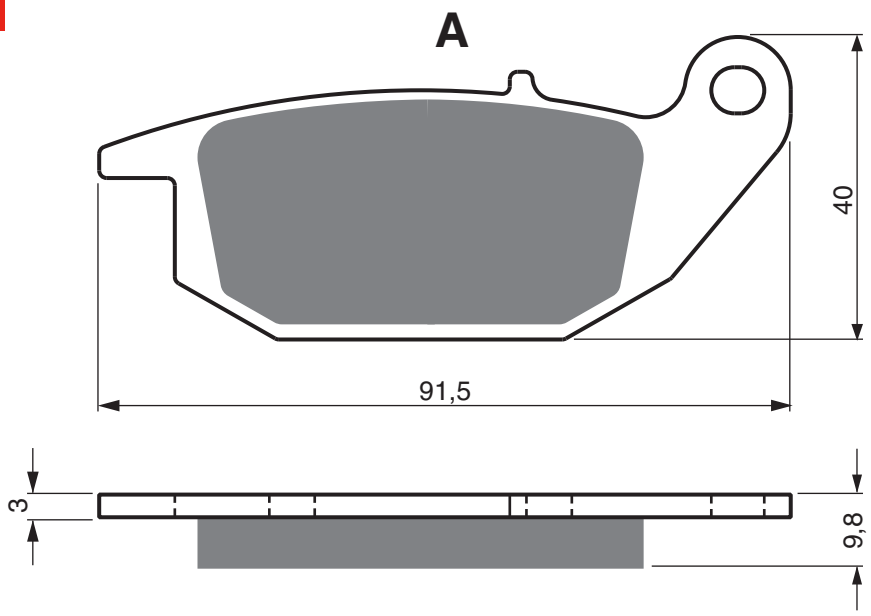

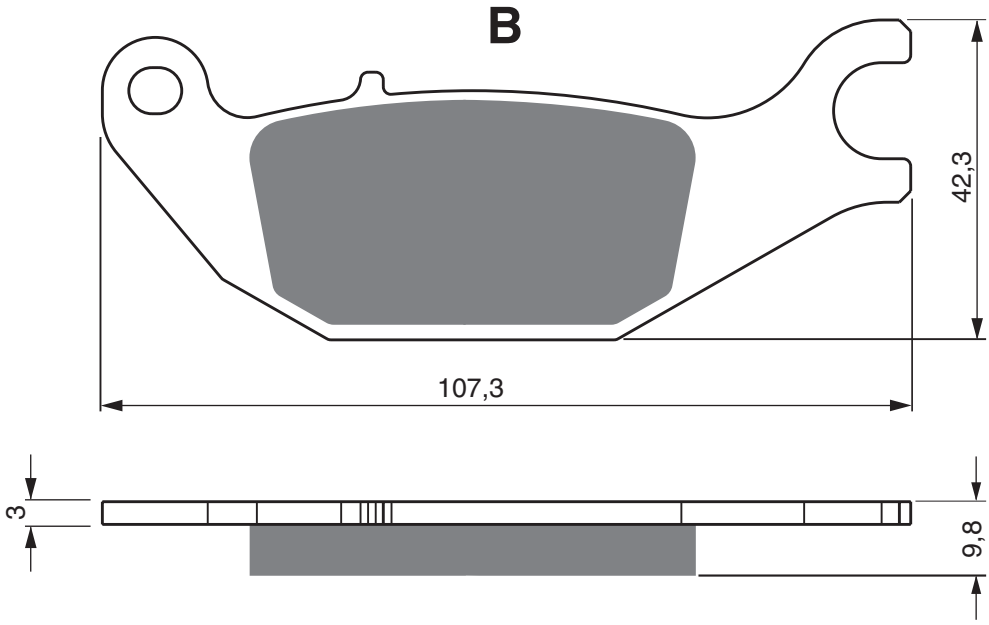

AJS

CR3	125	Regal Raptor	2006 - 2006	RR

HERO

ZMR	230	Karizma	2011 - 2012	RR

HONDA

CBR	125	R4/R5/RS5/RS6	2004 - 2006	RR
CBR	125	R4/R5/RS5/RW5/RW6/RW7/RW8/RW9/RWA (6 Bolt Front Disc / Canada)	2004 - 2010	RR
CBR	125	RW7/RW8/RW9/RWA (6 Bolt Front disc fixing)	2007 - 2010	RR
XL	125	V1-VA "Varadero"	2001 - 2016	RR
Z	125	Monkey M AC	2018 - 2021	RR
CBR	150	R	2000 - 2003	RR

YAMAHA

MW	125	Tricity Scooter	2014 - 2016	RR

EQUIVALENTS OEM

06435 KPC 641	06435 KPC 643	06435 KPP 901	06435 KPP 902	20P W0046 00	2CM F 5806 00

AD | S3 | S33 RACING

PART NUMBER

222

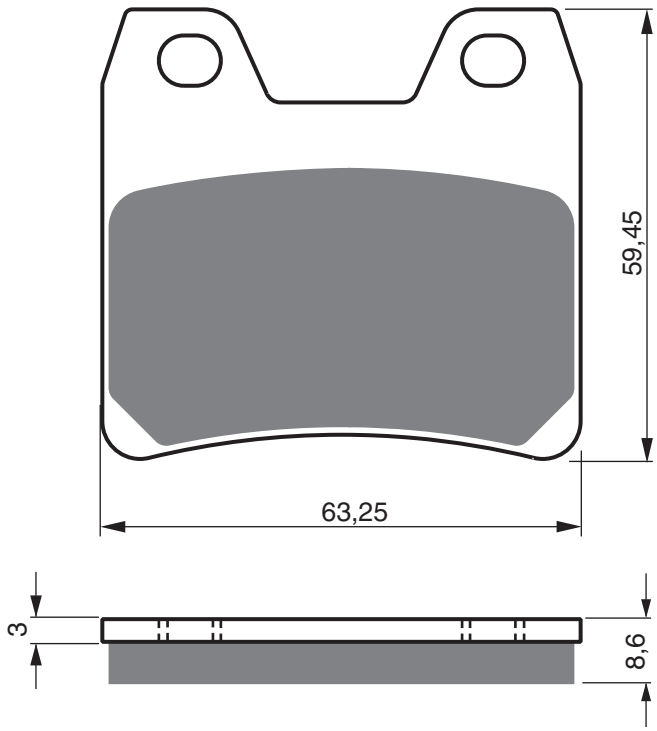

YAMAHA

FZS	1 000	Fazer	2001 - 2005	RR
XJR	1 300	C/Racer	2015 - 2016	RR
XJR	1 300	N/P (5EAP/5EAR/5EAS/5EAT/5EAW/5EAV/5EAY)(298 mm front disc)	2001 - 2002	RR
XJR	1 300	R/S (5WM1/5WM3/5WM5/5WM6/5WM7/5WM9)	2003 - 2004	RR
XJR	1 300	T/V/W/X/Y (5WMA/5WMC/5WMD/5WMF)	2005 - 2014	RR

EQUIVALENTS OEM

5LV W0046 50

PART NUMBER

223

AD | S3

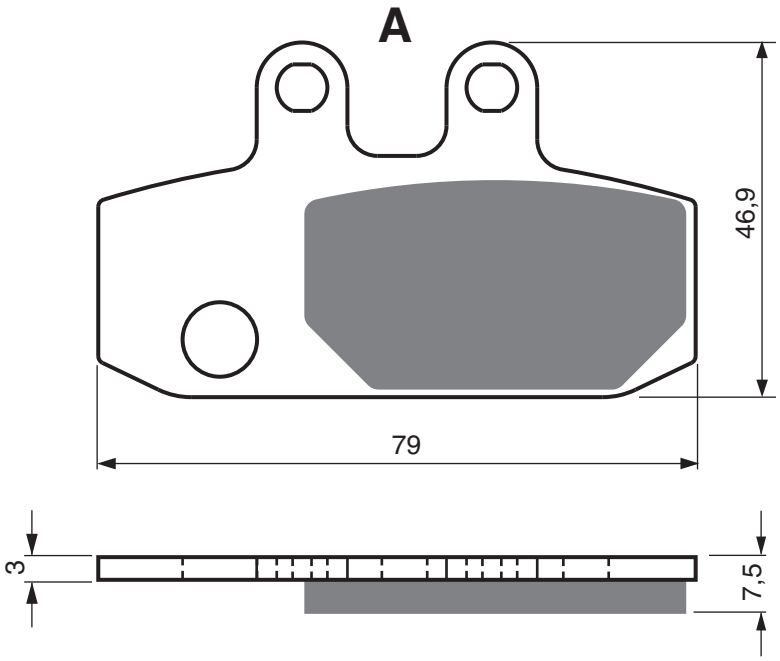

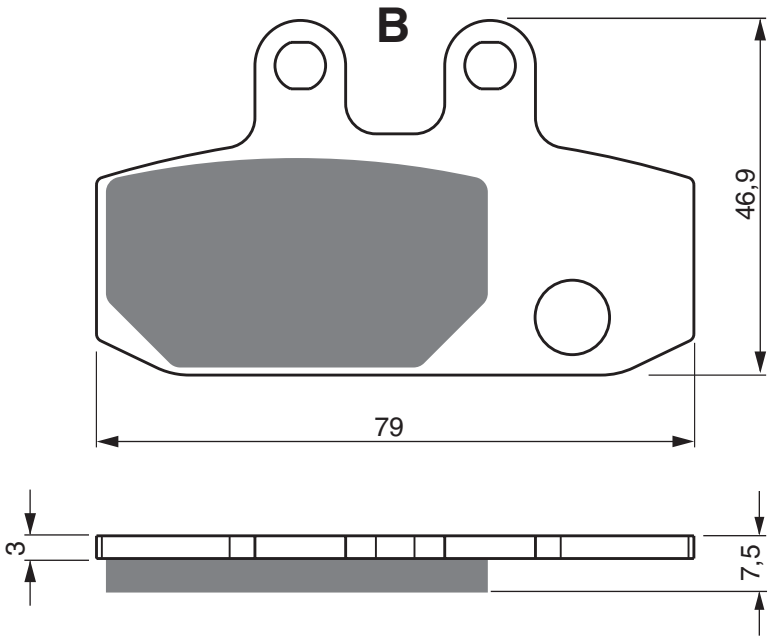

APRILIA

500	Atlantic	2002 - 2004	FL	FR

AD | S3

PART NUMBER

224

A

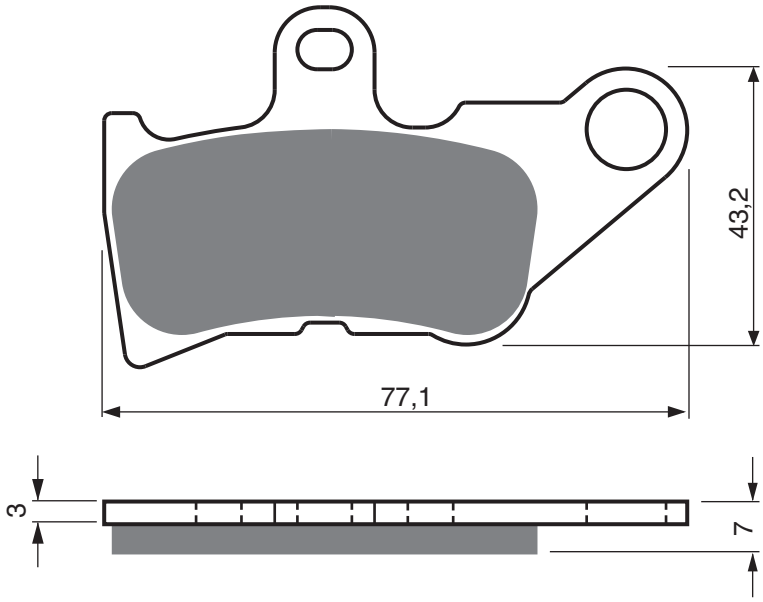

B

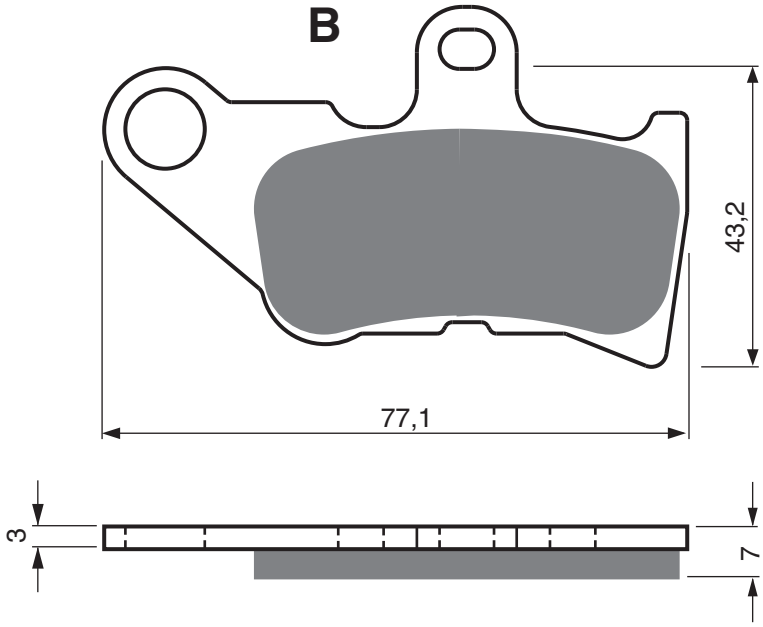

YAMAHA

CV	50	(5KN1/2) Jog-Cool Style	2000 - 2002	FL
CV	50	ZR (5PT1) Evolution	2001 - 2002	FL
ZR	50	Jog	2001 - 2002	FL
	113	MIO	2005 - 2007	FL
	113	MIO Sporty	2005 - 2007	FL
	113	Nuovo-Z	2006 - 2007	FL

EQUIVALENTS OEM

5KN W0045 00

PART NUMBER

225

AD	S3	GP5	GP6	GP7

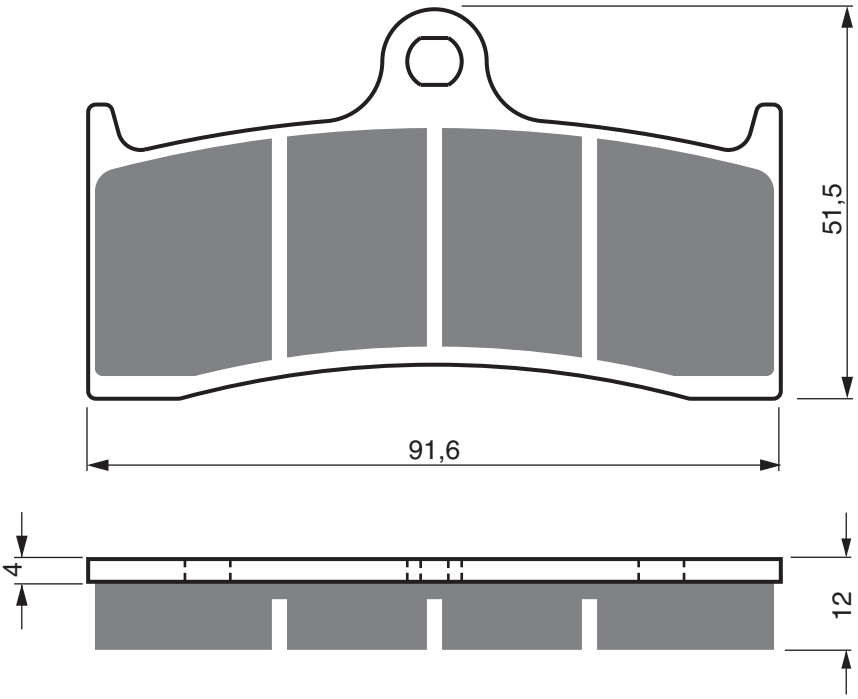

FOR BERINGER

6 Piston (Old Design / Endurance)	FL	FR

AD	K1	K5	K5-LX	S3	S33 RACING

PART NUMBER

226

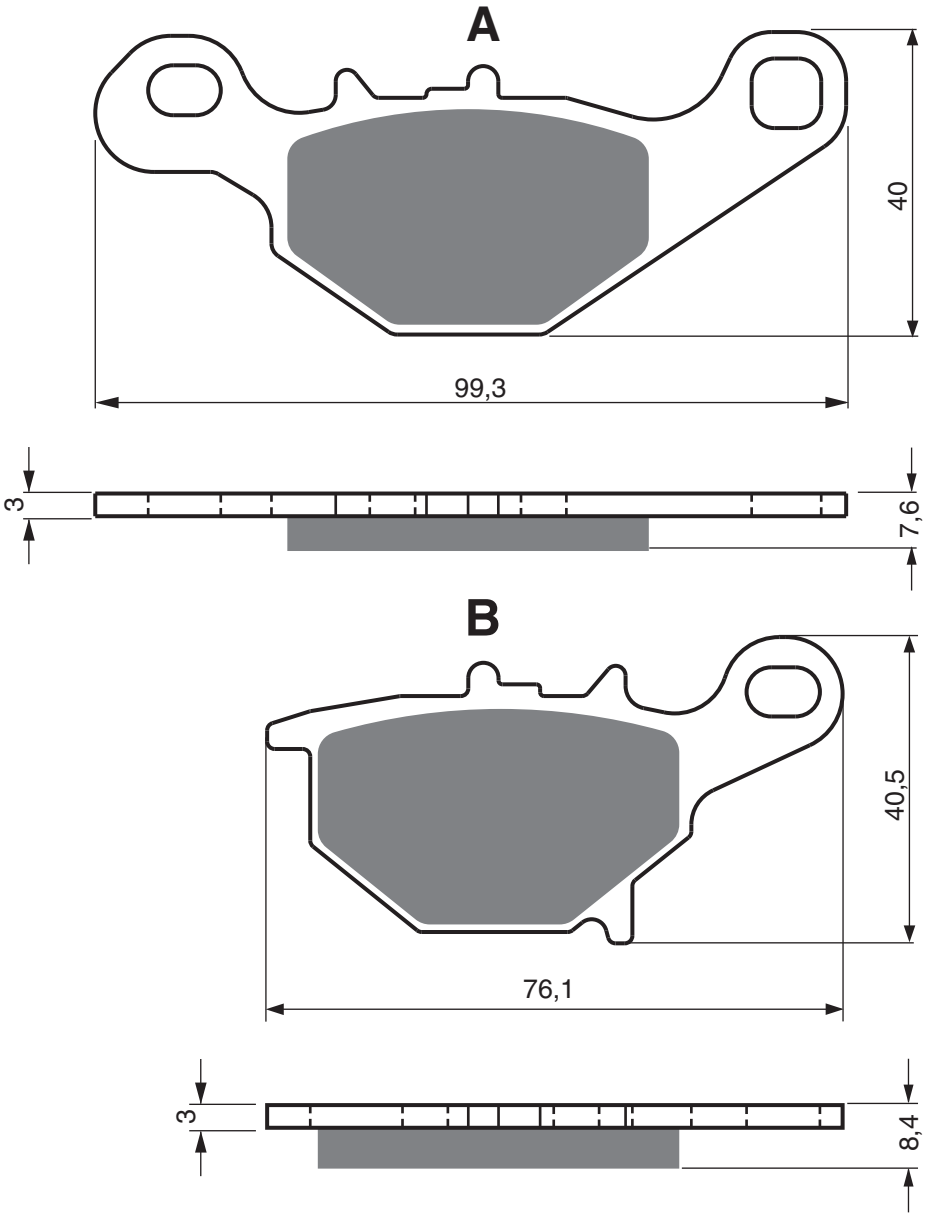

SUZUKI

RM	85	K5/K6/K7/K8/K9/L0/L2/L5/L6/L7 (Small 17" FW / 14" RW)	2005 - 2021	RR
RM	85	LK5/LK6/LK7/LK8/LK9/LL0/LL2/LL5/LL6/LL7 (Big 19" FW / 16" RW)	2005 - 2021	RR

EQUIVALENTS OEM

69100 03880

PART NUMBER

227

AD	S3	GP5	GP6	GP7

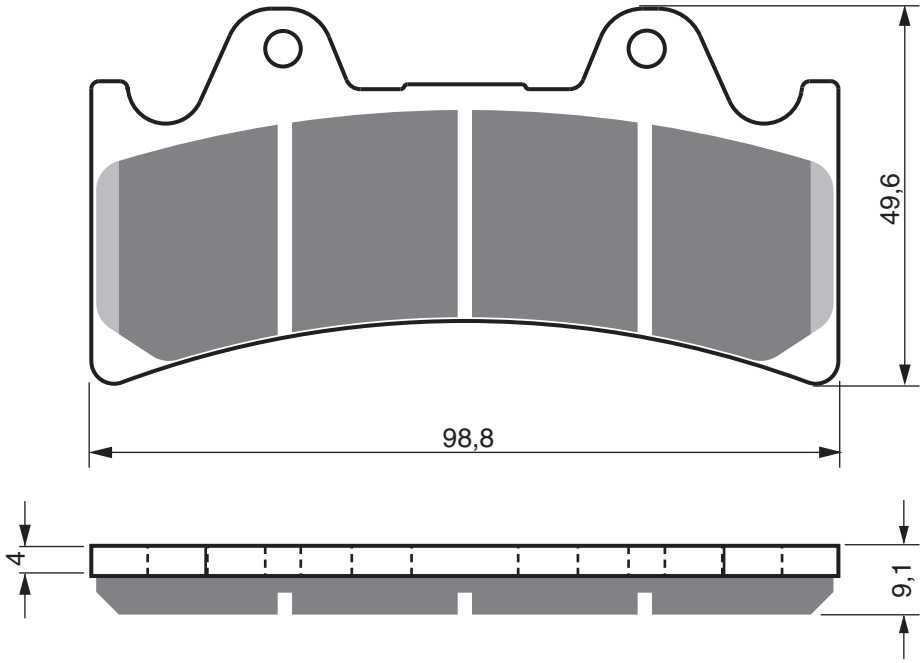

ALCON

6 Piston Race Caliper with 4.0 mm pin set FL

AD | S3 | S33 RACING

PART NUMBER

228

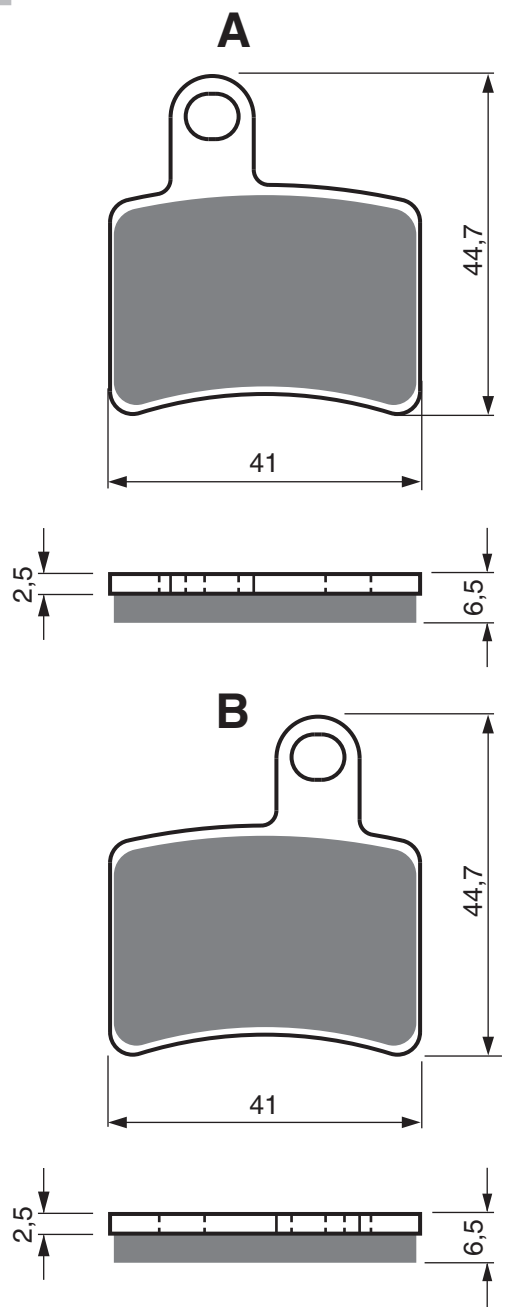

BETA

EVO	80	Senior	2009 - 2020	RR
REV	80		2008 - 2008	RR
REV 3	125		2006 - 2008	RR
REV 3	200		2006 - 2008	RR
REV	250	4T	2007 - 2008	RR
REV3	250		2005 - 2008	RR
REV3	270		2005 - 2008	RR

EQUIVALENTS OEM

25-25363	25-25373

PART NUMBER

229

AD	S3	S33 RACING

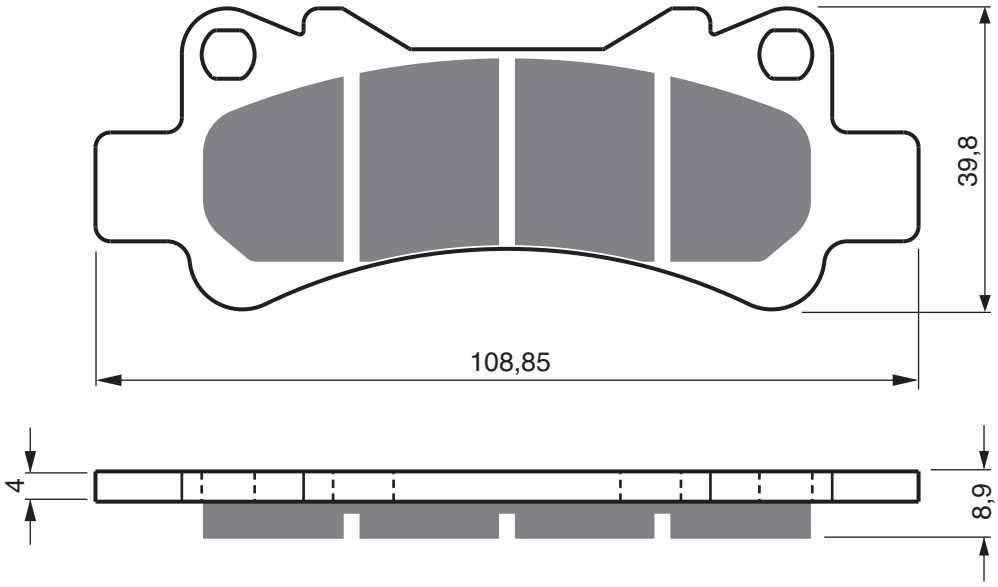

NISSIN

3 Piston racing rear caliper — RR

AD	K1	K5	S3

PART NUMBER

230

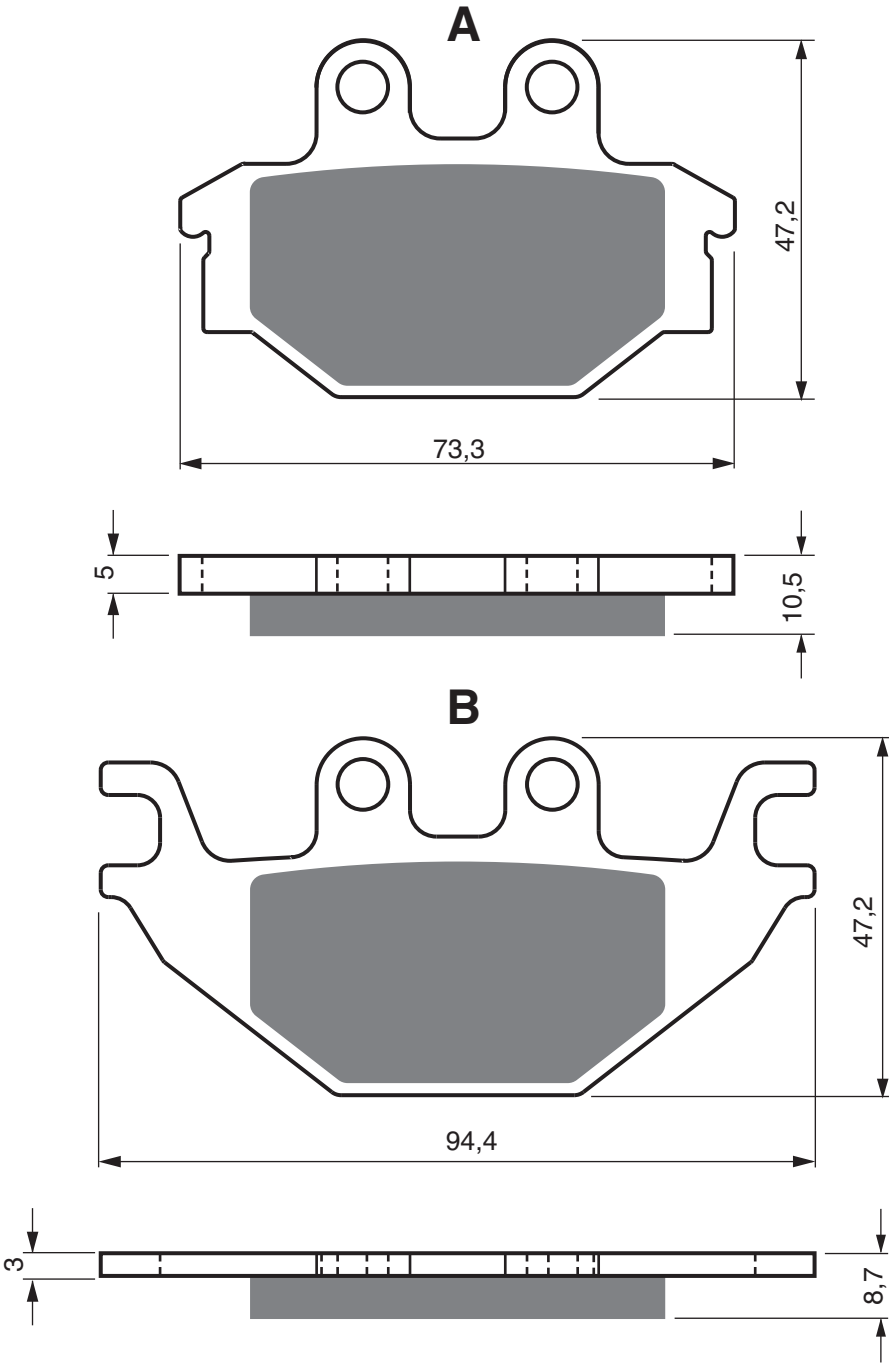

ADLY

	220	Crossroad Sentinal Quad		FL	FR
	280	Canyon Quad	2008 - 2009	FL	FR
	280	Huricane Quad	2008 - 2009	FL	FR
	300	Canyon Quad	2008 - 2009	FL	FR
	300	Crossroad Sentinal Quad	2008 - 2009	FL	FR
	300	Huricane Quad	2008 - 2009	FL	FR
	300	Utility	2005 - 2007	FL	FR
RS	300	Quad	2007 - 2008	FL	FR
XS	300	Quad	2007 - 2008	FL	FR
	320	Huricane Quad	2008 - 2009	FL	FR
	320	S Quad	2008 - 2008	FL	FR
	500	S Quad	2008 - 2008	FL	FR

AEON

	600	Overland (Quad)	2010 - 2011	FL	FR	

ARCTIC CAT

	90	Alterra	2017 - 2019	RR		
DVX	90		2018 - 2018	RR		
	150	Utility 2x4	2015 - 2018	RR		
DVX	250	Sport	2006 - 2008	FL	FR	
	300	Alterra	2015 - 2018	FL	RR	
	300	Utility (2x4)	2010 - 2014	FL	FR	RR
DVX	300		2009 - 2014	FL	FR	
	500	Prowler	2018 - 2019	FL	RR	

BOMBARDIER

DS	250		2006 - 2006	FL	FR	RR

PART NUMBER

230

AD | K1 | K5 | S3

CAN-AM

DS	250	(3J7A/B/C)	2007 - 2019	FL	FR	RR

CECTEK

	500	EFI Gladiator	2009 - 2010	FL	FR	

CPI

XS	250	Quad	2006 - 2009	FL	FR	

HERCULES

ATV	280		2007 -	FL	FR	
ATV	280	Sport	2007 -	FL	FR	
ATV	300	Sport	2007 -	FL	FR	

INDIAN

		Scout (Cast Wheel/Nissin Calipers)	2015 - 2016	RR		
		Scout Sixty (Toso Calipers/Cast Wheels)	2016 - 2016	RR		

KAWASAKI

KVF	300	CCF/CDF/CEF/CFF/CGF/CHF Brute Force	2012 - 2017	FL	FR	RR

KYMCO

	250	Maxxer	2012 - 2013	FL	FR	
	250	Urban Quad	2006 - 2006	FL	FR	
KXR	250	Mongoose Quad	2004 - 2007	FL	FR	
MXU	250		2004 - 2013	FL	FR	
MXU	250	R	2012 - 2013	FL	FR	RR
	300	Maxxer	2006 - 2013	FL	FR	
MXU	300		2006 - 2021	FL	FR	RR
MXU	300	R	2010 - 2021	FL	FR	RR
MXU	450	i (Side X Side)	2015 - 2021	FL	FR	RR
MXU	500	(Carb Model)	2010 - 2010	RR		
MXU	500	4x4/Carb Model	2005 - 2009	FL	FR	RR
MXU	500	i (4x4 IRS) (LAAOCD/CM)	2009 - 2014	PB		
MXU	500	i (EFi Model)	2010 - 2010	RR		
UXV	500	4x4 (Side x Side) U10000	2008 - 2009	FL	FR	RR
UXV	500	i (Side x Side/4x4) U10100	2010 - 2021	FL	FR	RR
MXU	550	i (4x4 LOF)	2013 - 2020	PB		
MXU	700	i (4x4 LOF)	2013 - 2018	PB		
UXV	700	i Turf	2014 - 2021	PB		

PGO

	500	Bug	2008 - 2009	RR		
BR	500	i Racer	2007 - 2009	RR		
BR	600	i Bug Racer	2012 - 2012	RR		

QUADZILLA

RS7		4WD	2010 - 2011	FL	FR	
RS8			2010 - 2011	FL	FR	
X7R			2010 - 2011	FL	FR	

SYM

SB	125	Ni-Wolf (EFi Model)	2011 - 2015	RR		
	200	Quadlander	2012 - 2013	FL	FR	
	200	Trackrunner Quad	2005 - 2009	FL	FR	
	250	Quadlander	2005 - 2007	FL	FR	
SB	250	Ni (Wolf SB)	2012 - 2015	RR		
	300	Citymax Quad	2006 - 2006	FL	FR	
	300	Quadlander	2008 - 2010	FL	FR	RR
	300	Quadlander S	2007 - 2015	FL	FR	RR
	600	Quadraider	2006 - 2007	RR		
	600	Quadraider	2008 - 2015	FL	FR	RR
	600	Quadraider LE (Quad)	2010 - 2015	FL	FR	RR

TGB

	400	Avenger LE (4x2)	2009 - 2010	FL	FR	
	400	Avenger Quad (4x2)	2007 - 2008	FL	FR	RR
	425	Blade Quad (4x4)	2007 - 2008	FL	FR	RR
	425	Blade SE (4x4)	2009 - 2010	FL	FR	
	450	Blade SE (4x4)	2010 - 2011	FL	FR	
	460	Blade SL IRS (4x4)	2012 - 2012	FL	FR	
	500	Avenger R (4x2)	2009 - 2010	FL	FR	
	510	Blade LE	2011 - 2012	FL	FR	
	525	Blade SE (4x4)	2009 - 2010	FL	FR	RR
	525	Blade SL 4 x 4	2009 - 2010	FL	FR	
	550	Blade IRS Target (4x4)	2011 - 2012	FL	FR	
	550	Blade LT (4x4)	2010 - 2011	FL	FR	
	550	Blade SE (4x4)	2009 - 2011	FL	FR	
	550	Blade SL (4x4)	2009 - 2010	FL	FR	
	550	Gunner 4x4 Target	2010 - 2012	FL	FR	RR
	550	Target IRS Blade LT	2010 - 2012	FL	FR	

YAMAHA

MT	125	(Non ABS)	2014 - 2016	RR		
MT	125	A (ABS)	2014 - 2021	RR		
YZF-R	125		2008 - 2013	RR		
YZF-R	125	(Radial F/Caliper/Non ABS)	2014 - 2016	RR		
YZF-R	125	A (Radial F/Caliper/ABS)	2014 - 2021	RR		

EQUIVALENTS OEM

45105 LB17 3050	45105 LBA7 3050	45105 LEE 8305	45113 REA 300A	4511A RAI 000	45120 256 000	00157056
S4511ARCA000	S4311ARCA000	515049	515050	5D7 F5911 00	B840F64-6500000	FZ10176
45105 PWA 1305	43082 Y003	43082 Y004	3303-908	43082 0140	43105 1EE8 305	

AD	S3	S33 RACING	GP5	GP6	GP7

PART NUMBER

231

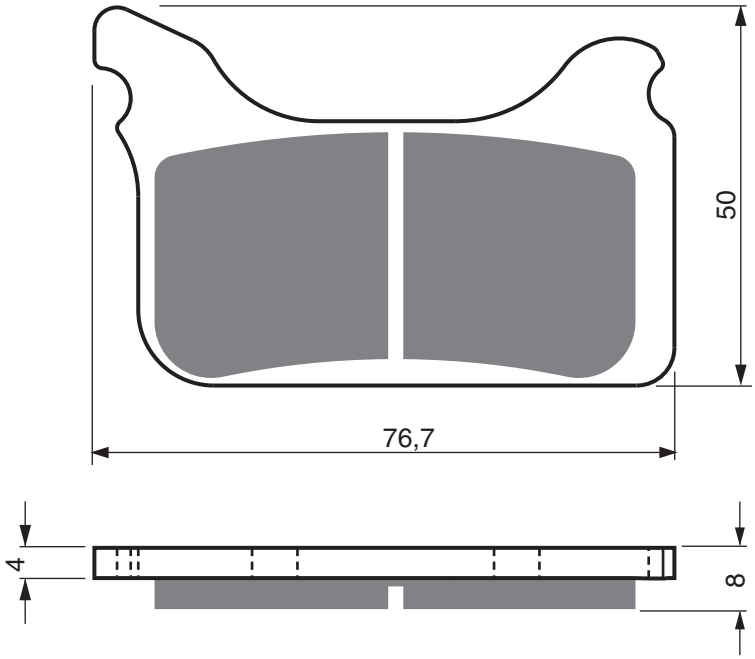

APRILIA

SXV	450	Supermotard	2006 - 2013	FL
SXV	550	Supermotard	2006 - 2013	FL

FOR BERINGER

	4 Piston (Radial)	FL

FTE

	Piston Radial Supermoto	FL

HUSABERG

FS	450	C	2006 - 2006	FL
FS	450	E	2006 - 2008	FL
GS	450	E	2006 - 2013	FL
FS	550	E Supermoto	2005 - 2007	FL
FS	650	C	2006 - 2008	FL
FS	650	E Supermoto	2005 - 2008	FL

KTM

SMR	450		2005 - 2006	FL
SMR	525		2005 - 2005	FL
SMR	650	Supermoto	2006 - 2006	FL

EQUIVALENTS OEM

586 13 030 100	9100906	1200 S/R2	586 13030 200	586 13 030 300	586 13 030 000

PART NUMBER

232

AD	K1	K5	S3

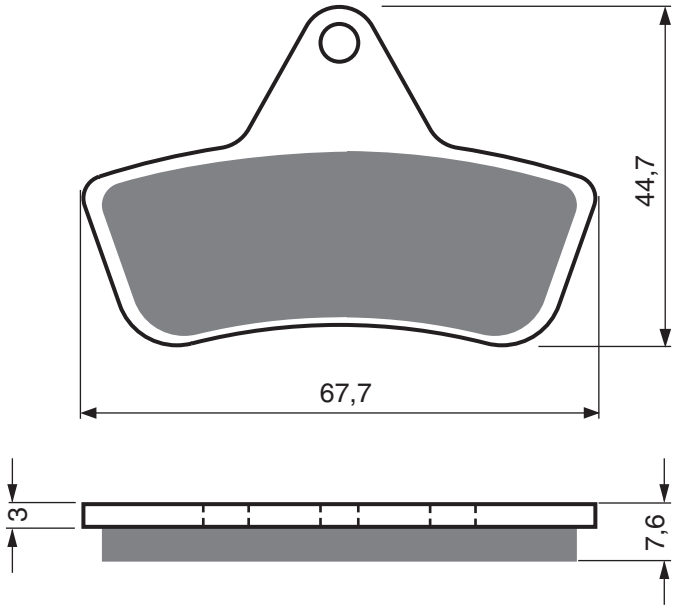

ARCTIC CAT

	Bear Cat	1996 - 1997	RR		
	Most Models	1996 - 2004	FL	RR	
250	2x4	1999 - 2004	FL	FR	RR
250	4x4	2000 - 2004	FL	FR	RR
300	Arctic Cat 2x4	1998 - 2004	FL	FR	RR
300	Arctic Cat 4x4	1998 - 2004	FL	FR	RR
375	Arctic Cat 2x4/4x4	2002 - 2002	FL	FR	RR
400	Bear Cat 2x4/4x4	1998 - 2004	FL	FR	RR
454	Arctic Cat 4x4	1998 - 1998	FL	FR	RR
454	Bear Cat 2x4/4x4	1996 - 1997	FL	FR	RR
500	4x4 Utility	1998 - 2009	FL	FR	RR

LAVERDA

HP	125	Quasar	2004 - 2004	RR		
HP	180	Quasar	2004 - 2004	RR		
	400	Quasar 4x4	2004 - 2004	FL	FR	RR
	500	Quasar 4x4	2004 - 2004	FL	FR	RR
	500	Quasar 4x4 C	2004 - 2004	FL	FR	RR

MASSEY FERGUSON

MF	250	(2WD/4WD)	2004 - 2004	FL	FR	RR
MF	300	(2WD/4WD)	2004 - 2004	FL	FR	RR
MF	400	4WD	2004 - 2004	FL	FR	RR
MF	400	Auto 4WD	2004 - 2004	FL	FR	RR
MF	500	(Auto 4WD) TBX Auto	2004 - 2004	FL	FR	RR

WILWOOD

	PS1 Caliper (Part # 150-4091K)	FL

EQUIVALENTS OEM

0502 019	0402 096	0402 494	0402 882

AD | S3 | S33 RACING

PART NUMBER

233

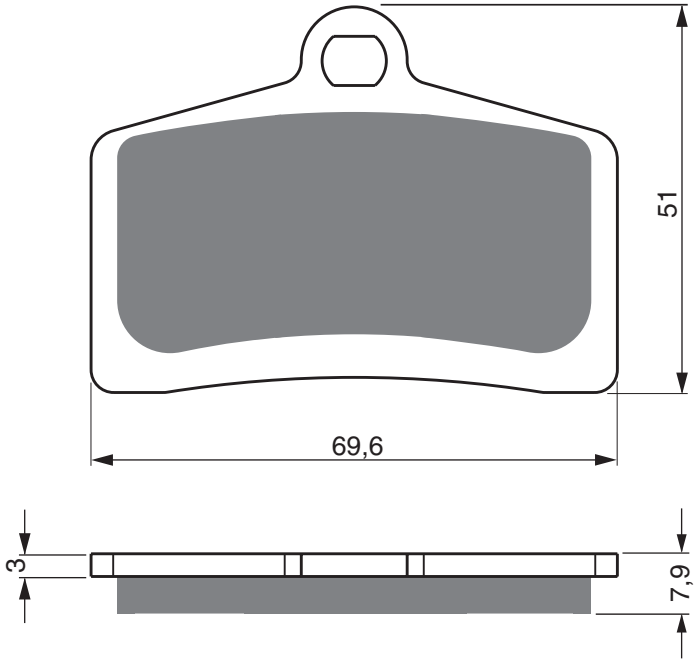

APRILIA

RS-4	50	(4T) (AJP rear caliper)	2011 - 2014	FL
	125	Tuono (ABS)	2017 - 2020	FL
RS	125	(4T)	2017 - 2018	FL
RS	125	GP Replica (4T)	2018 - 2020	FL
RS4	125	(4T) (AJP Calipers)	2011 - 2020	FL

BLATA

	125	Enduro	2007 - 2008	FL
	125	Motard	2007 - 2008	FL

CONTI

RX	356	V3 (12" wheels)	2005 - 2006	FL
RX	356	V3 (17" wheels)	2005 - 2006	FL

DERBI

GPR	50	2T (41 mm Forks/218mm R/Disc/Radial Caliper)	2009 - 2011	FL
GP1	125	Racing (Low seat/Radial Caliper / 6 bolt disc fixing)	2007 - 2009	FL
GPR	125	(4T) 4V	2009 - 2014	FL
GPR	125	Nude (Radial Caliper) (2T)	2004 - 2008	FL
GPR	125	Racing (Radial Caliper) (2T)	2004 - 2007	FL
GP1	250	Racing (Low seat/Radial caliper 6 bolt disc fixing)	2007 - 2009	FL

EXCELSIOR-HENDERSON

	1 386	Deadwood Special	2000 - 2000	FL	RR
	1 386	Super X all models	1999 - 1999	FL	RR

GILERA

SC	125		2006 - 2007	FL

METRAKIT

	125	Pre GP	2009 - 2009	FL

MOTORHISPANIA

KN2	50		2012 - 2013	FL
RX	50	R	2008 - 2014	FL
KN1	125	AC/LC	2009 - 2014	FL
KN2	125	(125/4T)	2012 - 2014	FL
LC	125	Hard Road SM	2012 - 2012	FL
MH7	125	Naked (Air cooled/Liquid cooled)	2008 - 2014	FL
RX	125	R	2008 - 2014	FL

PEUGEOT

NK7	50	Naked	2009 - 2012	FL
XR7	50	(2T)	2008 - 2012	FL

TOMOS

SM	125	F (Rad.cal.)	2006 - 2008	FL

EQUIVALENTS OEM

00H01201221	810K5804	866687	8044220	864580

PART NUMBER

234

AD | S3 | S33 RACING

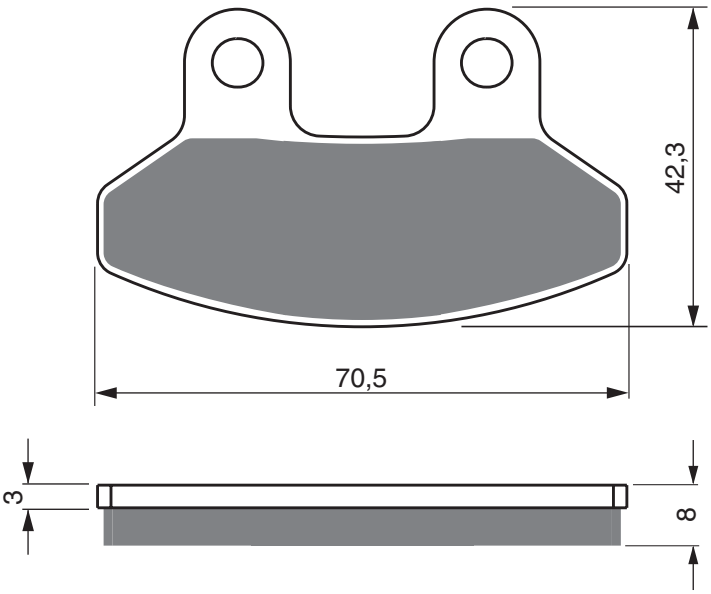

LAVERDA

	125	Phoenix	2001 - 2004	FL
	150	Phoenix	2001 - 2004	FL
	200	Phoenix	2001 - 2004	FL

SYM

	50	Shark	1999 - 2003	FR
RS	50		2004 - 2009	FL
	125	Joyride	2001 - 2007	FL
	125	Joyride EVO i (Twin Headlamps)	2009 - 2020	FL
	125	Joyride i	2007 - 2009	FL
	125	Shark	1999 - 2002	FL
4VR	125	Shark	2001 - 2002	FL
MX	125	Euro (Rear Disc model) (HF12 W3-6 Euro 2)	2006 - 2009	FL
MX	125	Euro (Rear drum model) (HF12-W6 Euro 1)	2002 - 2007	FL
RS	125		2004 - 2006	FL
SK	125		2003 - 2004	FL
VS	125		2006 - 2015	FL
	150	Joyride	2001 - 2006	FL
	150	Shark	1999 - 2002	FL
RS	150		2006 - 2006	FL
VS	150		2006 - 2015	FL
	200	Joyride EVO i	2009 - 2020	FL
	200	Joyride	2001 - 2007	FL
	200	Joyride i	2007 - 2009	FL

EQUIVALENTS OEM

45105 HA3A 000	45105 H3A 900A	8900239

AD | S3 | S33 RACING

PART NUMBER

235

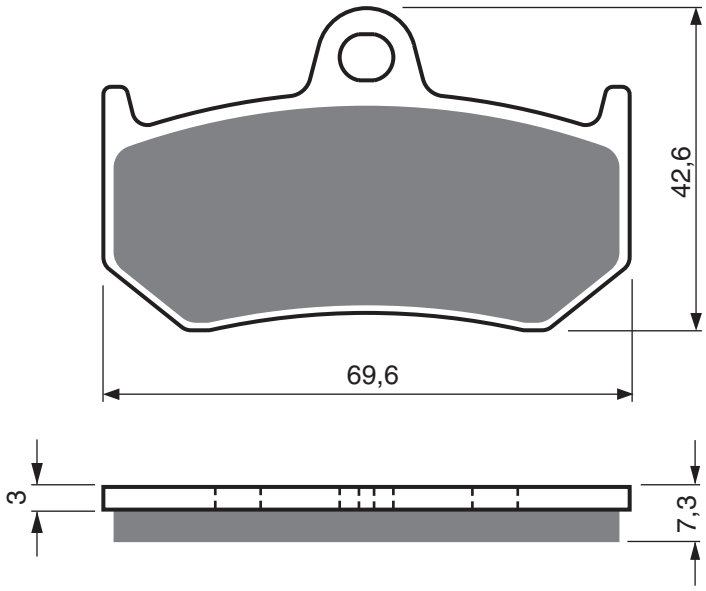

MV AGUSTA

	750	Brutale Oro F4	2003 - 2005	RR
	750	Brutale S F4	2003 - 2005	RR
F4	750	SPR	2001 - 2004	RR
F4	750	SPR Senna	2001 - 2003	RR
F4S	750	(Mono Posto)	1999 - 2004	RR
F4S	750	1+1 (Bi-Posto)	2001 - 2004	RR
	910	Brutale R (Brembo Calipers/4 pads)	2006 - 2008	RR
	910	Brutale S (Nissin Calipers)	2006 - 2008	RR
	920	Brutale	2011 - 2012	RR
	989	Brutale	2008 - 2009	RR
	990	Brutale R	2010 - 2011	RR
	998	Frecce Tricolori	2010 - 2010	RR
F4	998		2010 - 2015	RR
F4	998	R	2012 - 2015	RR
F4	998	RR	2010 - 2015	RR
F4	998	RR Corsa Corta	2012 - 2012	RR
F4	1 000	Ago	2005 - 2005	RR
F4	1 000	R	2006 - 2007	RR
F4	1 000	R 312 1+1	2007 - 2008	RR
F4	1 000	R 312 (Brembo 4 Pad Caliper from VIN 008065)	2008 - 2009	RR
F4	1 000	R 312 (Brembo 4 piston caliper up to VIN 008064)	2007 - 2007	RR
F4	1 000	S (Mono Posto)	2004 - 2006	RR
F4	1 000	Ss 1+1 (Bi Posto)	2004 - 2006	RR
F4	1 000	Tamburini	2005 - 2005	RR
	1 078	Brutale RR	2008 - 2009	RR
F4	1 078	CC (Claudio Castigioni)	2007 - 2008	RR
F4	1 078	RR 312	2009 - 2009	RR
	1 090	Brutale	2013 - 2015	RR
	1 090	Brutale R	2012 - 2015	RR
	1 090	Brutale RR	2010 - 2015	RR

EQUIVALENTS OEM

8000 82748

PART NUMBER

236

AD	K1	K5	S3	S33 RACING

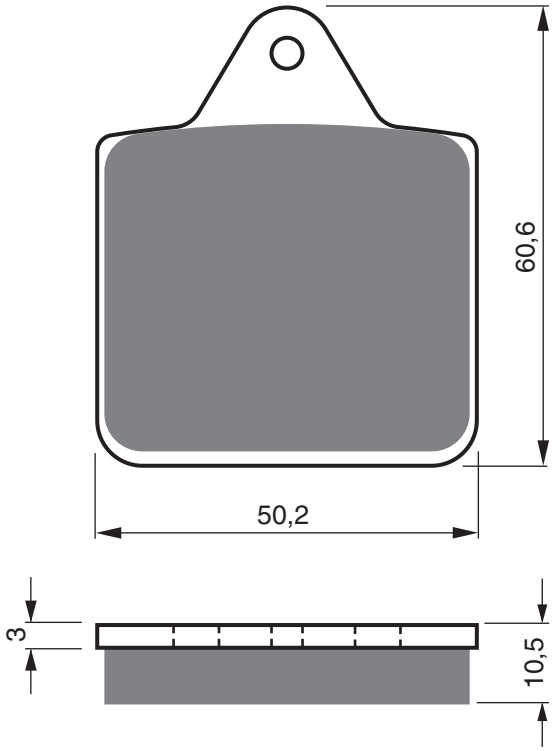

POLARIS

	Ranger	1999 - 1999	RR
400	Big Boss L 6x6 (Middle Axle Brake)	1996 - 1996	RR
425	Big Boss 6x6 (Middle Axle Brake)	1996 - 1996	RR
425	Magnum 6x6 (Middle Axle Brake)	1996 - 1996	RR

EQUIVALENTS OEM

22 00 807

AD | S3

PART NUMBER

237

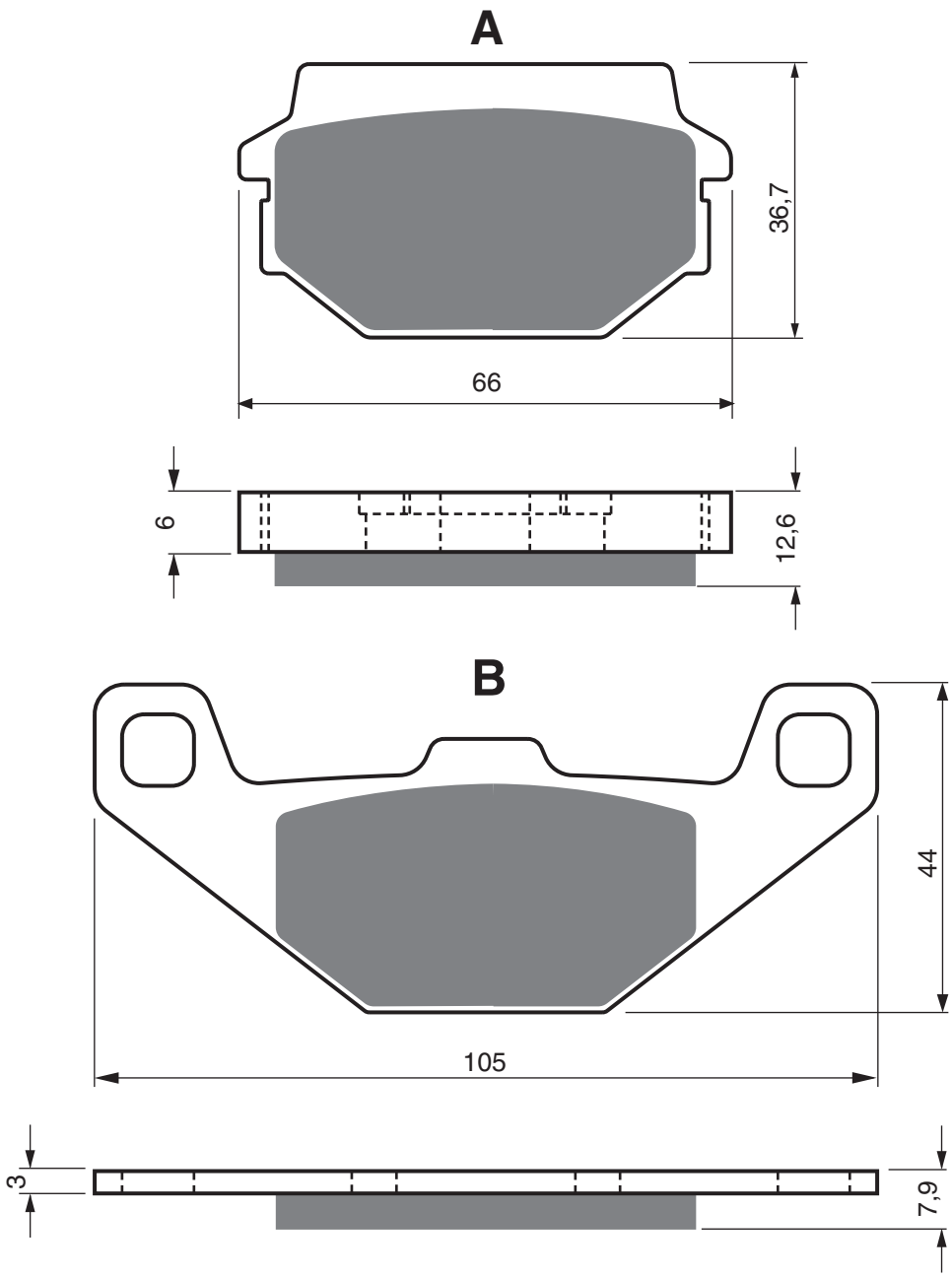

SYM

	125	Huskey	1999 - 2005	FL
CT	125		2003 - 2004	FL
	150	Huskey	1999 - 2005	FL

EQUIVALENTS OEM

45105 N02 001 A

PART NUMBER

238

AD	S3	S33 RACING	GP5	GP6	GP7	GPR

1 set = 4 pcs

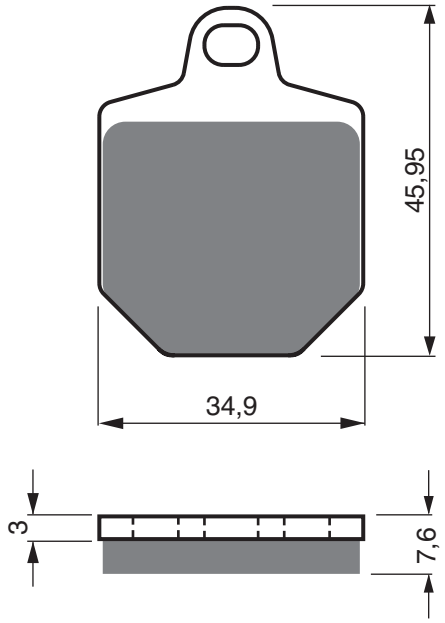

HM				
CRM	125	R Supermoto	2007 - 2007	FL
CRM	250	X Supermoto	2007 - 2007	FL
CRM	450	R/X Supermoto	2007 - 2007	FL
CRM-F	490	X Supermoto	2007 - 2007	FL
CRM-F	500	X	2011 - 2011	FL
HUSABERG				
FS	570	Supermoto	2010 - 2011	FL
KTM				
SMR	450	(Magura Caliper)	2007 - 2013	FL
SMR	560		2007 - 2007	FL
MAGURA				
		4 Piston Radial Supermoto Caliper		FL

EQUIVALENTS OEM

0722189	072223	594 13 030 000	SM 27300

S3	GP5	GP6	GP7

1 set = 4 pcs

PART NUMBER

239

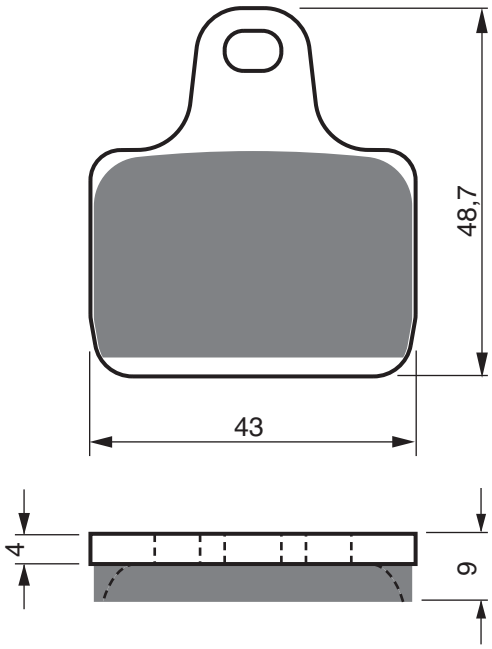

A.P.LOCKHEED		
	4 Piston Radial Mount / 4 Separate Pads (CP6688 - 8EOM/9E-OM)	FL
ACCOSSATO		
	108mm Radial Racing Caliper, 4 piston/4 pads	FL
	AGPZ01, 108 mm CNC Monoblock, 4 piston/4 pads	FL
	AGPZ02, 108 mm Forged Monoblock, 4 piston/4 pads	FL
	AGPZ03, 108 mm Forged Monoblock, 4 piston/4 pads	FL
	AGPZ04, 108 mm Forged Monoblock, 4 piston/4 pads	FL
	AGPZ06, 60 mm CNC Moto 3, 2 piston/2 pads	FL
BREMBO RACING CALIPERS		
	X00.C04 60/61 - 4 Piston P 34/34 Radial Mount Caliper @ 108mm spacing (4 Pad Set)	FL
	X99C4 60/61 P4/34 Radial monobloc 4 pad 108mm spacing	FL
	XA07680 - Piston P2 34 Radial Mount (Note only sold as set o 4 pads)	FL
PVM		
	2 Piston Rear Caliper (Note only 2 pads required)	FL
	4 Piston Radial Mount Caliper	FL

EQUIVALENTS OEM

07 7874 24	8000B1421	CP6688D29	107 A486 04	M049Z04

PART NUMBER

240

AD	K1	K5	K5-LX	S3

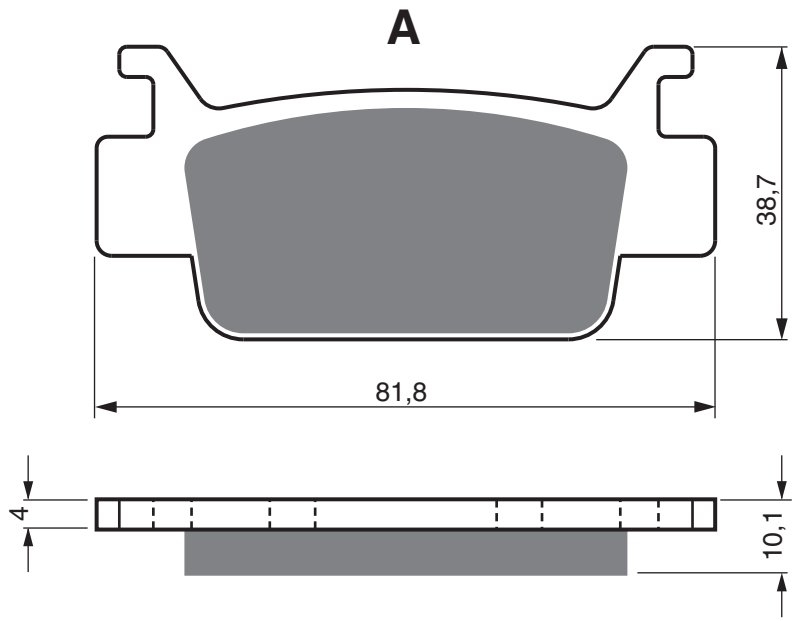

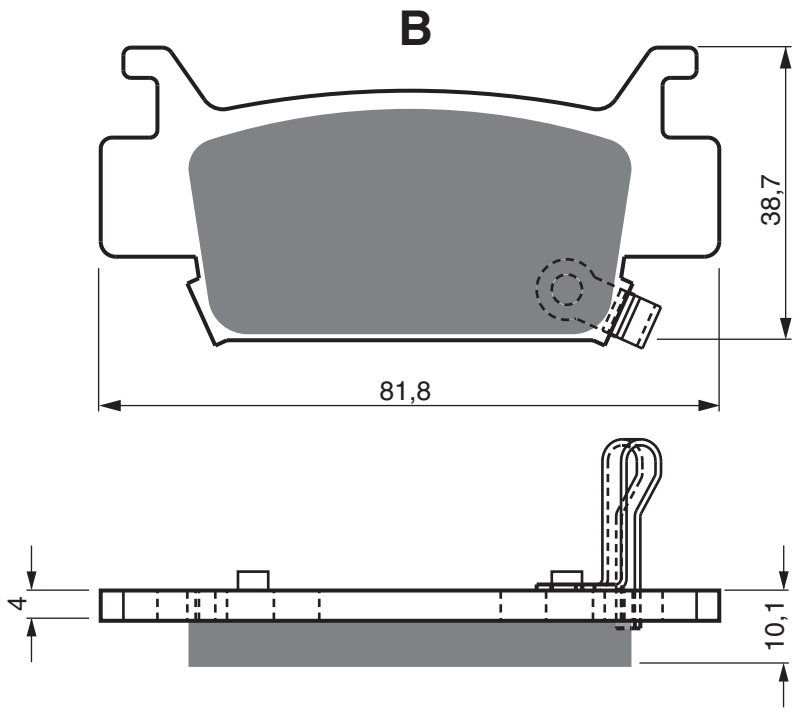

HONDA

TRX	500	FA5/FA6/FA7/FA8/FA9/FAA/FAB Fourtrax Auto	2005 - 2011	FL	FR
TRX	500	FE5/FE6/FE7/FE8/FE9/FEA/FEB Fourtrax Foreman 4WD/ES	2005 - 2011	FL	FR
TRX	500	FM5/FM6/FM7/FM8/FM9/FMA/FMB Fourtrax Foreman 4WD	2005 - 2011	FL	FR
TRX	500	FPE8/FPE9/FPEA Fourtrax Foreman Power Steering	2005 - 2011	FL	FR
TRX	500	TM5/TM6 Fourtrax Foreman	2005 - 2006	FL	FR
TRX	680	FA6/FA7/FA8/FA9/FAA/FAB/FAC Rincon 4x4 Auto	2006 - 2021	FL	FR
TRX	700	XX8/XX9/XXB	2008 - 2011	RR	

EQUIVALENTS OEM

06451 HPO A01	06452 HPO A01	06435 HP6 A01

AD	S3	S33 RACING

PART NUMBER

241

A

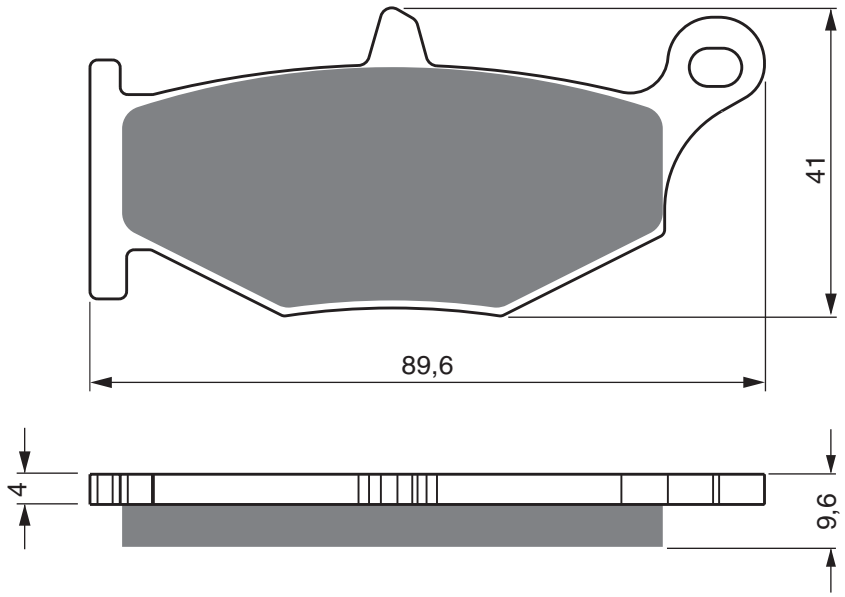

B

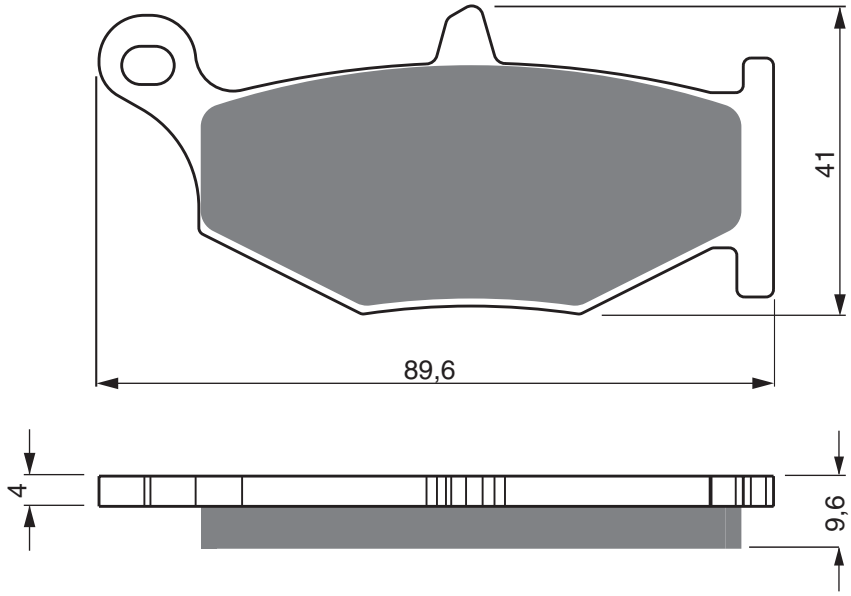

SUZUKI

GSR	400	K6/K7/K8	2006 - 2008	RR
GSR	600	K6/K7/K8	2006 - 2010	RR
GSX-R	600	K6/K7	2006 - 2007	RR
GSX-R	600	K8/K9/L0	2008 - 2010	RR
GSX-R	750	K6/K7	2006 - 2007	RR
GSX-R	750	K8/K9/L0	2008 - 2010	RR
DL	1 000	AL4/AL5/AL6/AL7/AL8/AL9 V-Strom (ABS)	2014 - 2020	RR
DL	1 000	XT V-Strom (XAL8/XAL9) (ABS)	2018 - 2020	RR
GSX-R	1 000	K7/K8	2007 - 2008	RR
DL	1 050	V-Strom (ABS)	2018 - 2021	RR
DL	1 050	V-Strom XT (ABS)	2018 - 2021	RR
DL	1 050	V-Strom XT Tour (ABS)	2018 - 2021	RR
GSX	1 300	B-King (BKK8/BKK9/BKL0/BKL1)	2008 - 2012	RR
GSX-R	1 300	RK8/RK9/RL0/RL1/RL2 Hayabusa	2008 - 2012	RR
GSX-R	1 300	Hayabusa (Brembo Calipers)	2013 - 2020	RR

EQUIVALENTS OEM

69101 44810	69100 15830	69100 15850	69101 44890

PART NUMBER

242

AD | S3 | S33 RACING

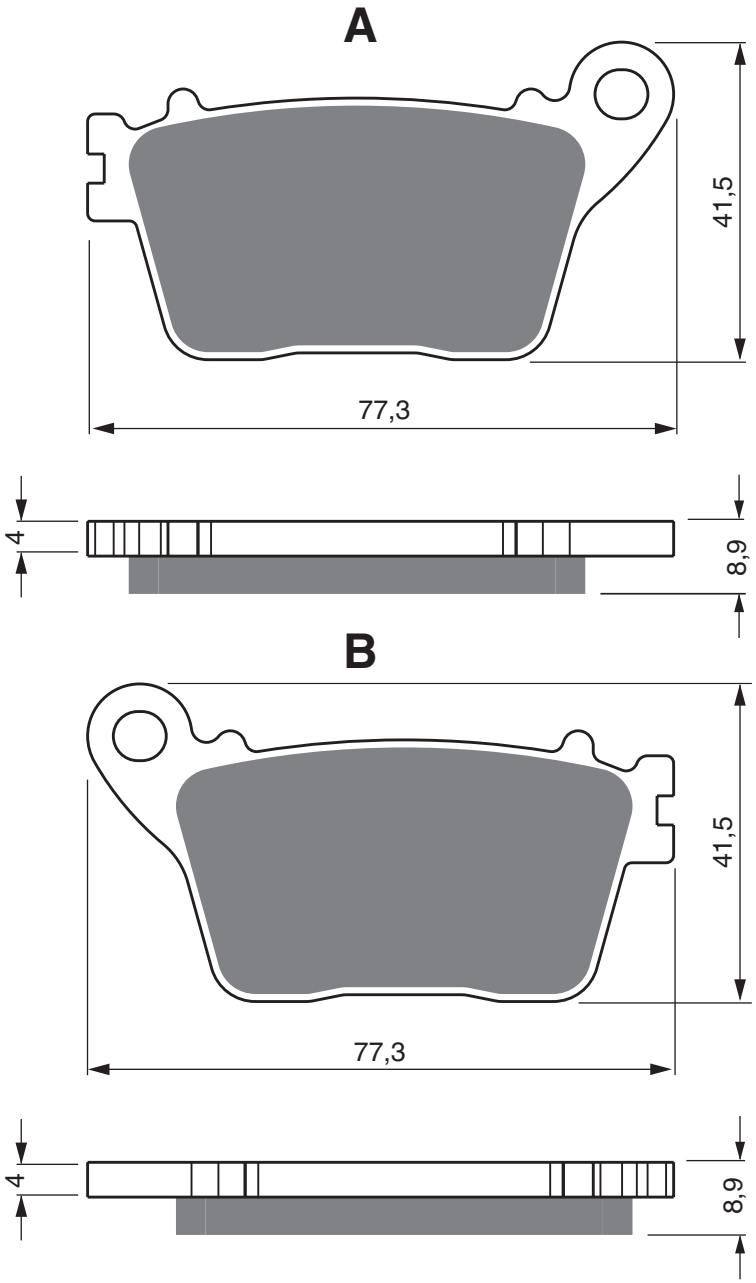

HONDA

CB	600	F7/F8/F9/FA/FB/FC Hornet	2007 - 2013	RR
CBR	600	FB/FC (Non ABS)	2011 - 2013	RR
CBR	600	RA9/RAA/RAB/RAC/RAD/RAG (C-ABS)	2009 - 2016	RR
CBR	600	RR	2017 - 2020	RR
CBR	600	RR ABS	2017 - 2021	RR
CBR	600	RR Hannspree	2008 - 2008	RR
CBR	600	RR7/RR8/RR9/RAA/RRB/RRC/RRD/RRE/RRF/RRG (Radial Caliper)	2007 - 2016	RR
CBR	1 000	Fireblade 8 Ball ABS	2020 - 2020	RR
CBR	1 000	RA9/RAA/RAB/RAC/RAD/RAE/RAF/RAG/RAH/RAJ (C-ABS) Fireblade	2009 - 2016	RR
CBR	1 000	RAH/RAJ Fireblade (C-ABS / Tokico Front Caliper)	2017 - 2021	RR
CBR	1 000	RR-SP Fireblade (CBR 1000 SE/SF/SG) (Non ABS)	2014 - 2016	RR
CBR	1 000	RR-SP Fireblade (CBR1000 SAE/SAF/SAG/SAH/SAJ/SAK - Brembo Front Caliper) (ABS)	2014 - 2020	RR
CBR	1 000	RR-SP TT-Edition (ABS)	2016 - 2016	RR
CBR	1 000	RR6/RR7 Fireblade	2006 - 2007	RR
CBR	1 000	RR8/RR9/RRA/RRB/RRC/RRD/RRE/RRF/RRG Fireblade (Non ABS)	2008 - 2016	RR
CBR	1 000	RRH/RRJ Fireblade (C-ABS/Tokico Front Caliper)	2017 - 2020	RR

AD | S3 | S33 RACING

PART NUMBER

242

KAWASAKI

ZX-6R	636	30th Anniversary Edition (ZX 636 EFFA / Non ABS/ 636cc)	2015 - 2015	RR
ZX-6R	636	30th Anniversary Edition (ZX 636 FFFA / ABS 636cc)	2015 - 2015	RR
ZX-6R	636	Ninja (ABS - 636cc)	2013 - 2020	RR
ZX-6R	636	Ninja (Non ABS - 636 cc)	2013 - 2020	RR
ZX-6R	636	Ninja KRT (ABS - 636cc)	2016 - 2020	RR
ZX-6R	636	Ninja KRT (Non ABS - 636cc)	2016 - 2020	RR
ZX 10R	1 000	Ninja SE	2018 - 2020	RR
ZX-10R	1 000	Ninja ABS (ZX1000 SGF/SHF/SJF)	2016 - 2020	RR
ZX-10R	1 000	(ZX 1000 JBF/JCF/JDF/JEF/JFF)	2011 - 2015	RR
ZX-10R	1 000	30th Anniversary Edition (ABS) (ZX 1000 KFFA)	2015 - 2015	RR
ZX-10R	1 000	30th Anniversary Edition (Non ABS) (ZX 1000 JFFA)	2015 - 2015	RR
ZX-10R	1 000	ABS (ZX 1000 KBF/KCF/KDF/KEF/KFF)	2011 - 2015	RR
ZX-10R	1 000	Ninja KRT Replica (ZX1000 SGFA/SHFA/SJFA)	2016 - 2020	RR
ZX-10R	1 000	Winter Test Edition (ZX1000 SGFB)	2016 - 2016	RR
ZX-10RR	1 000	Ninja (ZX1000ZHF)	2017 - 2017	RR
ZX10-R	1 000	Ninja ABS (ZX 1002 EKF/FKF)	2019 - 2020	RR

SUZUKI

GSX-R	600	L1/L2/L3/L4/L5/L6/L7/L8	2011 - 2018	RR
GSX-R	750	L1/L2/L3/L4/L5/L6/L7/L8/L9	2011 - 2020	RR
GSX-R	1 000	A (Brembo Caliper / 320mm Disc ABS)	2017 - 2020	RR
GSX-R	1 000	AL5/AL6 (Brembo Caliper / 310mm Disc ABS)	2015 - 2016	RR
GSX-R	1 000	K9/L0/L1	2009 - 2011	RR
GSX-R	1 000	L2/L3/ZL3/L4/ZL4/L5/L6/L7 (Brembo Caliper)	2012 - 2017	RR
GSX-R	1 000	R (Brembo Caliper/320mm Disc ABS)	2017 - 2020	RR

YAMAHA

YZF	600	R6 (Rad.cal.)	2017 - 2020	RR
	847	Nikken (ABS) (3 cyl)	2018 - 2020	RR
YZF	1 000	R1	2015 - 2020	RR
YZF	1 000	R1 60th Anniversary Edition	2016 - 2016	RR
YZF	1 000	R1M	2015 - 2020	RR
YZF	1 000	R1M Mission	2020 - 2020	RR

EQUIVALENTS OEM

06435 MEL D21	06435 MFG D02	06435 MEL D22	69100 47820	43082 0115	2CR 25806 00	04635 MEL D23
69100 47830						

PART NUMBER

243

AD	K1	K5	S3	S33 RACING

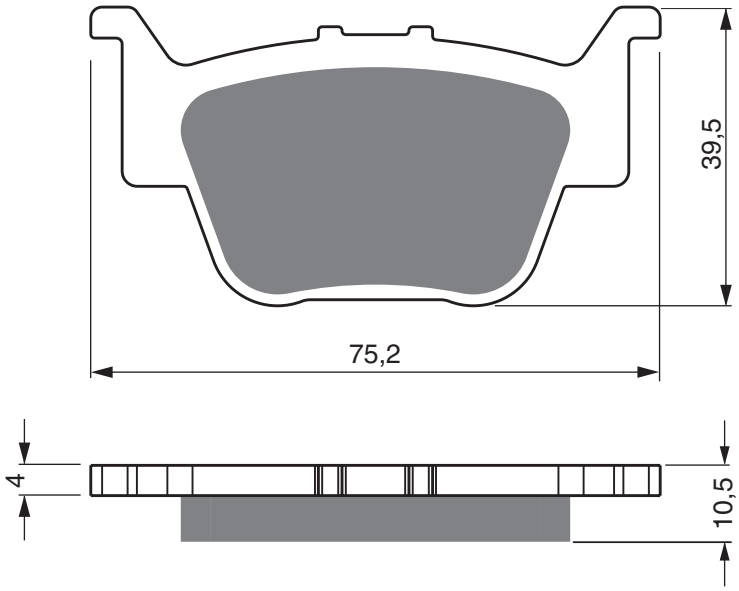

HONDA

TRX	420	All Models	2014 - 2021	RR
TRX	420	FA9/FAA/FAB Fourtrax Auto 4WD	2009 - 2011	RR
TRX	420	FPA9/FPAA/FPBA Fourtrax Auto Power Steering	2009 - 2011	RR
TRX	450	R4/R5/R6/R7/ER7/R8/ER8/R9/ER9	2004 - 2009	RR
TRX	650	FA3/FA4/FA5 Rincon 4x4 Auto	2003 - 2005	RR
TRX	680	FA6/FA7/FA8/FA9/FAA/FAB/FAC Rincon 4x4 Auto	2006 - 2021	RR

EQUIVALENTS OEM

06435 HN8 006	06435 HP1 006

AD | S3 | S33 RACING

PART NUMBER

244

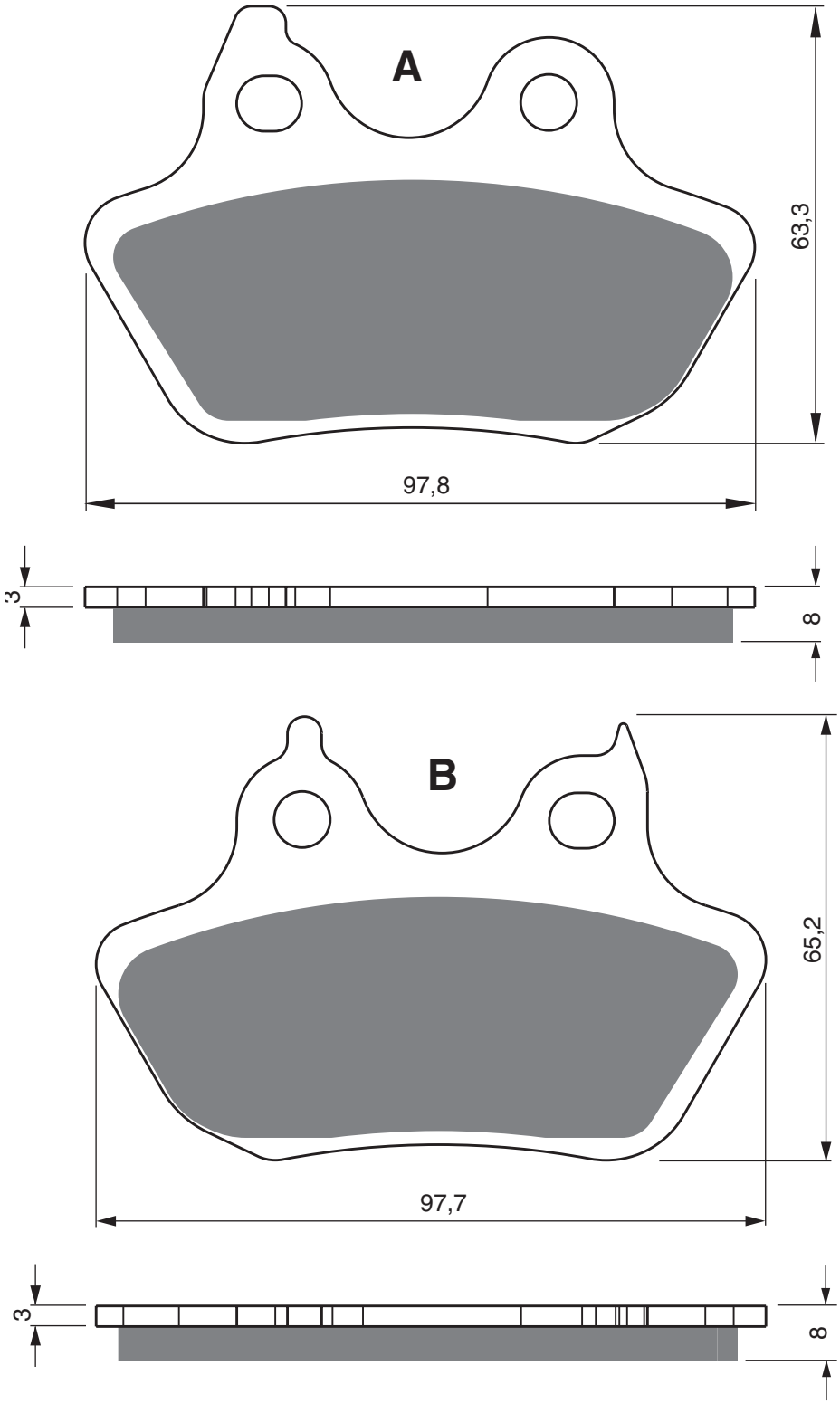

HARLEY DAVIDSON

FLSTF	1 584	Fat Boy	2007 - 2007	RR
FXST	1 584	Softail Standard	2006 - 2007	RR
FXSTB	1 584	Night Train Softail	2006 - 2007	RR
FXSTC	1 584	Softail Custom	2007 - 2007	RR

EQUIVALENTS OEM

46721-06

PART NUMBER

245

AD	K1	K5	S3

A

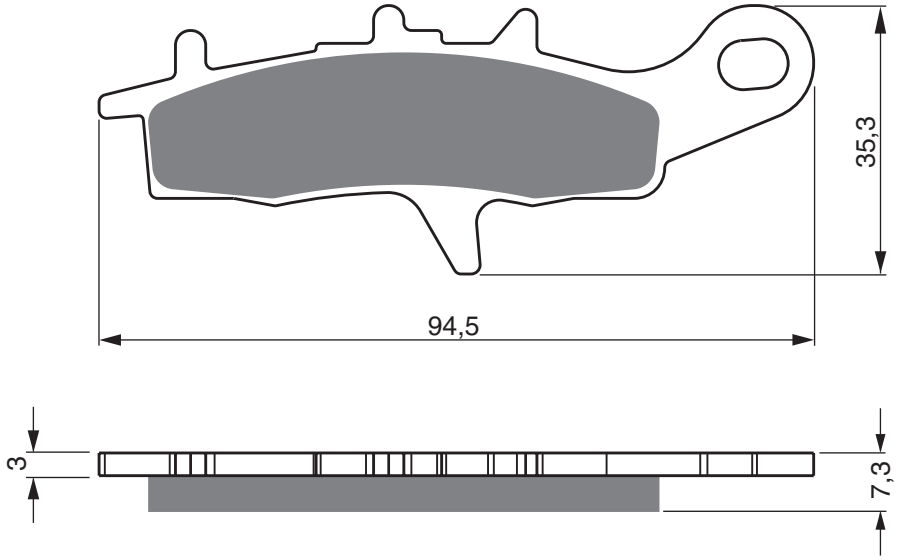

B

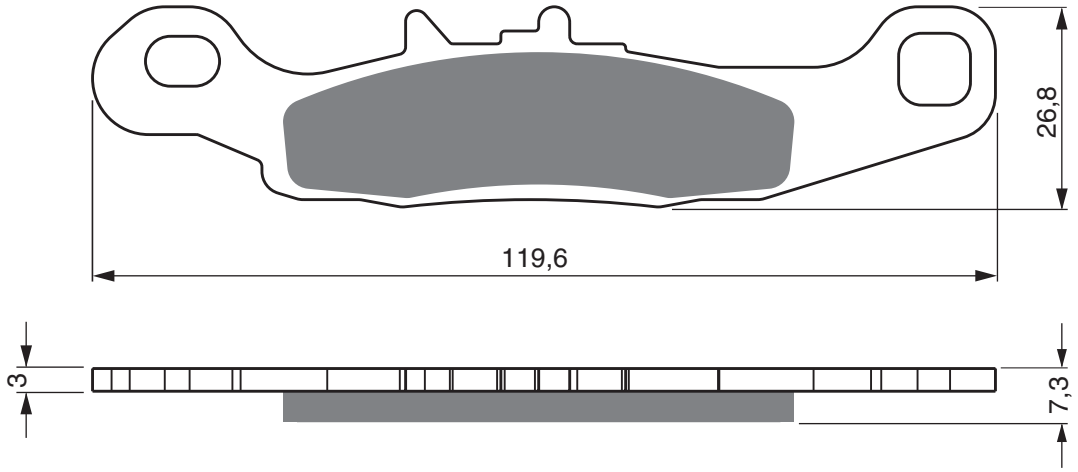

KAWASAKI

KFX	450	R Quad (KSF 450 B8F/B9F/BAF/BBF/BCS/BDF/BEF)	2008 - 2014	FL
KVF	650	A1/A2 Prairie	2002 - 2003	FL
KVF	650	D1/D6F/D7F/D8F/D9F/DAF/DBF Brute Force 4x4	2005 - 2011	FL
KVF	650	E1/E6F/E7F/E8F/E9F Brute Force 4x4 Hardwoods Green HD	2005 - 2009	FL
KSV	700	A1/A2/A6F/A7F/A8F/A9F/ABF (KFX 700) V-Force	2004 - 2006	FL
KVF	700	A1/A2/A7F/A8F/B1/B2/B6F 4x4 Prairie	2004 - 2008	FL
KVF	700	D1 Team Green	2005 - 2005	FL

SUZUKI

LT-V	700	FK4/FK5 Twin Peaks	2004 - 2005	FL

EQUIVALENTS OEM

43082 1255

AD	S3	S33 RACING	GP5	GP6	GP7	GPR

PART NUMBER

246

1 set = 2 pcs small
2 pcs large

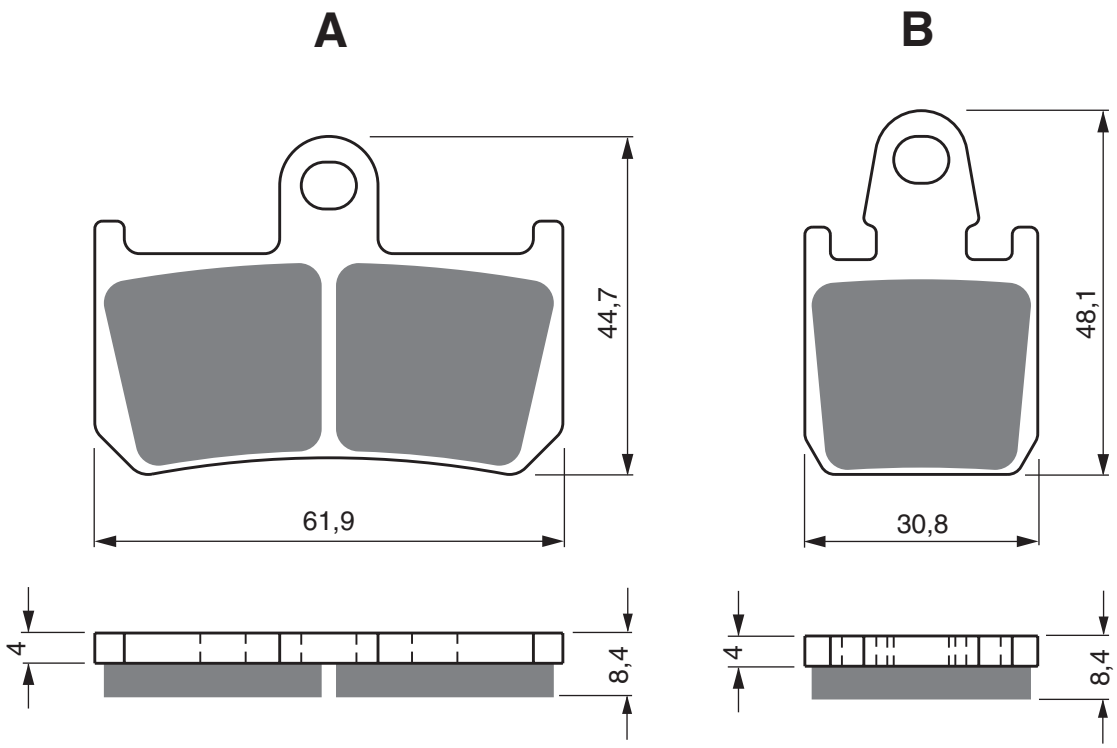

YAMAHA

YZF	1 000	R1 (6 piston radial caliper)	2007 - 2014	FL	FR
YZF	1 000	R1 (Rad.cal.) (4-pad) ABS	2012 - 2014	FL	FR
MT-01	1 670	(6 piston radial caliper)	2007 - 2010	FL	FR
MT-01	1 670	S (5YUR)	2009 - 2009	FL	FR
MT-01	1 700		2007 - 2016	FL	FR
XV	1 700	V-Max	2009 - 2021	FL	FR

EQUIVALENTS OEM

4C8 W0045 00	107 A225 40

PART NUMBER

247

AD | S3 | S33 RACING

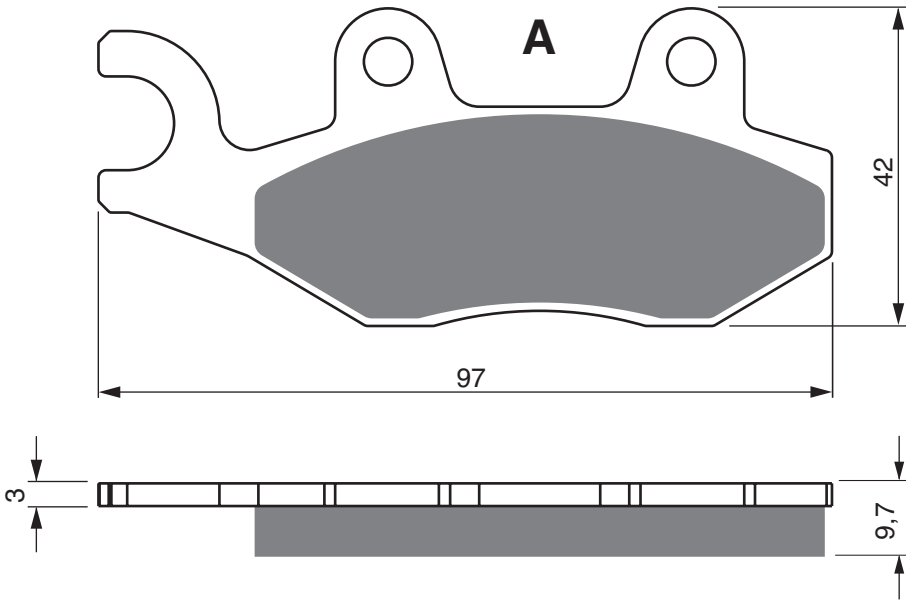

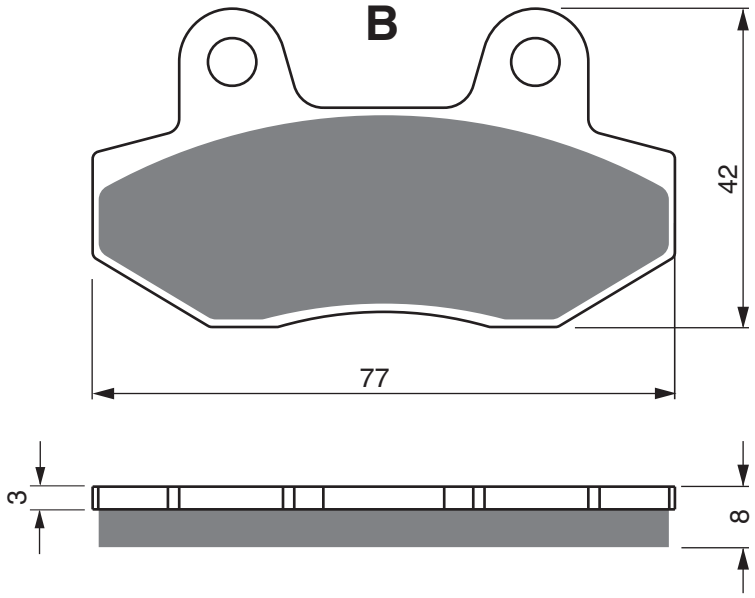

TRIUMPH

		Sprint RS (From VIN 139277) (Single sided swing arm up to VIN161317) (6bolt front disc)	2003 - 2004	RR
T595		Daytona	1997 - 1997	RR
	790	Speedmaster (Carb)	2003 - 2004	RR
	800	Bonneville (790cc)	2001 - 2006	RR
	800	Bonneville America (Spoke Wheel)	2002 - 2006	RR
T100	800	Bonneville (790cc)	2002 - 2004	RR
	865	Bonneville Spirit (Spoke Wheel)	2015 - 2015	RR
	865	America (12 Spoke Cast wheels/865cc)	2010 - 2017	RR
	865	America LT (12 spoke cast wheels/865cc)	2014 - 2017	RR
	865	Bonneville (Cast Wheels)	2009 - 2015	RR
	865	Bonneville Newchurch (Cast Wheel)	2015 - 2015	RR
	865	Bonneville SE (Cast Wheel)	2009 - 2011	RR
	865	Bonneville Steve McQueen SE (Spoke Wheel)	2012 - 2012	RR
	865	Bonneville/Bonneville Black	2007 - 2008	RR
	865	Scrambler	2006 - 2015	RR
	865	Speedmaster (Carb)	2005 - 2007	RR
	865	Speedmaster (EFI)	2008 - 2009	RR
	865	Speedmaster (EFi)	2010 - 2016	RR
T100	865	Bonneville	2005 - 2009	RR
T100	865	Bonneville (Air Cooled/Spoke Wheel)	2010 - 2016	RR
T100	865	Bonneville Black (Spoke Wheel/Air Cooled)	2014 - 2016	RR
T214	865	Bonneville (Spoke Wheel)	2015 - 2015	RR
T509	885	Speed Triple (EFi - 6 Bolt Front Disc)	1997 - 1998	RR
	900	America (6 Spoke Cast wheel)	2007 - 2009	RR
	900	Street Cup (Liquid Cooled)	2016 - 2020	RR

AD | S3 | S33 RACING

PART NUMBER

247

	900	Street Scrambler (Liquid Cooled)	2016 - 2020	RR
	900	Street Twin (Liquid Cooled)	2016 - 2020	RR
	900	Thruxton	2004 - 2016	RR
	900	Thruxton Ace	2015 - 2016	RR
T100	900	Bonneville (Liquid Cooled/Spoke Wheel)	2016 - 2020	RR
T100	900	Bonneville Black (Liquid Cooled/Spoke Wheel)	2016 - 2020	RR
	955	Daytona i	2005 - 2006	RR
	955	Daytona i (6bolt front disc) (Single sided swinging arm)	1998 - 2000	RR
	955	Daytona i (From VIN 132513) (5 bolt front disc single sided s/arm)	2001 - 2004	RR
	955	Speed Triple (EFi - 6 Bolt Front Disc)	1999 - 2004	RR
	955	Sprint ST i (Non ABS) (Front Disc With offset / 6 Bolt Fixing)	1999 - 2004	RR
T595	955	Daytona	1997 - 1997	RR
	1 050	Speed Triple (4 Brembo F/Caliper/220 R/Disc/ABS) - To VIN 461331	2007 - 2011	RR
	1 050	Speed Triple (4 Brembo F/Caliper/220mm R/Disc/Non ABS) - To VIN 461331	2007 - 2011	RR
	1 050	Speed Triple (4 Pad Brembo F/Caliper /255mm R/Disc/ABS) - From VIN461332	2011 - 2016	RR
	1 050	Speed Triple (4 Pad Brembo F/Caliper /255mm R/Disc/Non ABS) - From VIN 461332	2011 - 2016	RR
	1 050	Speed Triple (Nissin Radial Caliper F/Caliper/220mm R/Disc)	2005 - 2006	RR
	1 050	Speed Triple R (2 Pad Brembo caliper/Non ABS/5 Spoke wheel)	2012 - 2013	RR
	1 050	Speed Triple R (2 Pad Brembo F/Caliper/ABS/10 Spoke wheel)	2014 - 2016	RR
	1 050	Speed Triple R (2 Pad Brembo F/Caliper/ABS/5 Spoke wheel)	2012 - 2013	RR
	1 050	Speed Triple R (2 Pad Brembo F/Caliper/Non ABS/10 Spoke wheel)	2014 - 2016	RR
	1 050	Speed Triple R (ABS)	2017 - 2017	RR
	1 050	Speed Triple RS (ABS)	2018 - 2018	RR
	1 050	Speed Triple S (ABS)	2017 - 2018	RR
	1 050	Sprint GT SE (ABS)	2010 - 2020	RR
	1 050	Sprint i ST (ABS) (Front disc with zero offset)	2011 - 2012	RR
	1 050	Sprint ST (5 Spoke Wheel / Non ABS Model / 5 Bolt Disc With offset)	2005 - 2010	RR
	1 050	Sprint ST (5 Spoke Wheel/ ABS Model / 5 Bolt fixing Disc With offset)	2005 - 2010	RR
	1 050	Sprint ST (Non ABS) (Front Disc With zero offset)	2011 - 2012	RR
	1 050	Tiger Sport (ABS)	2013 - 2018	RR
	1 200	Thruxton (Liquid Cooled)	2016 - 2020	RR
	1 200	Thruxton R (Liquid Cooled)	2016 - 2020	RR
	1 200	Thruxton TFC (Liquid Cooled)	2019 - 2020	RR
	1 200	Tiger Explorer	2012 - 2015	RR
	1 200	Tiger Explorer XC	2013 - 2015	RR
T120	1 200	Bonneville (Liquid Cooled)	2016 - 2020	RR
T120	1 200	Bonneville Black (Liquid Cooled)	2016 - 2020	RR

EQUIVALENTS OEM

T 2020 555	T 2020 072 T31	T 2020 556	T 2020 191	T2020955	T2022955

PART NUMBER

248

AD	K1	K5	K5-LX	S3	S33 RACING

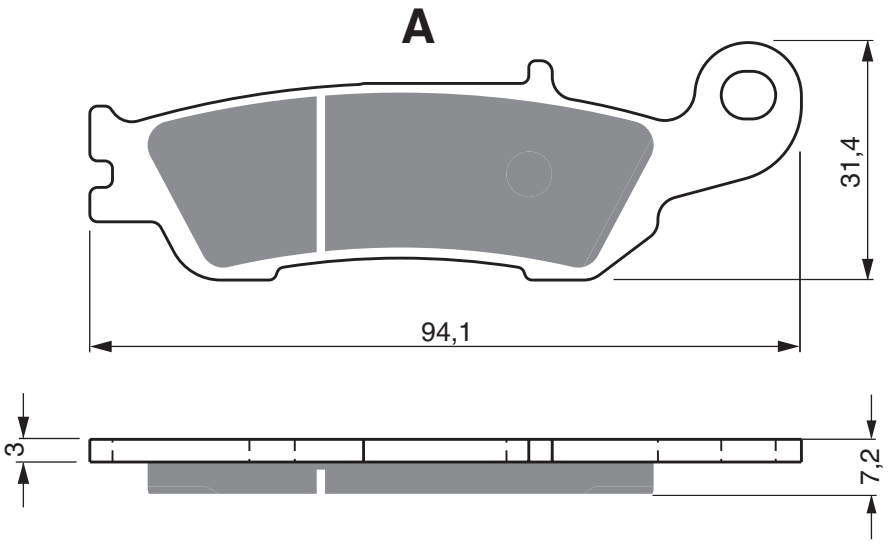

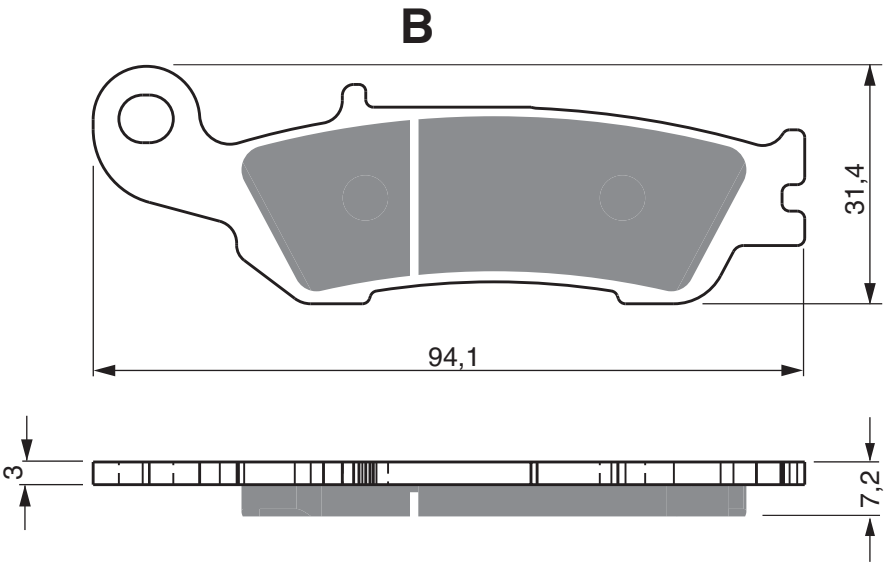

FANTIC				
XE	125		2021 - 2021	FL
XX	125		2021 - 2021	FL
YAMAHA				
YZ	125	X/Y/Z/A/B/D/E/F/G/H/J (2T)	2008 - 2021	FL
WR	250	FH/FJ (4T/Reverse Cylinder)	2017 - 2021	FL
YZ	250	X/Y/Z/A/B/D/E/F/G/H/J (2T)	2008 - 2018	FL
YZ	250	FW/FX/FY (4T)	2007 - 2009	FL
YZ	250	FZ/FA/FB/FD/FE/FF (4T)	2010 - 2015	FL
YZ	250	FG/FH/FJ (270mm Disc)	2016 - 2021	FL
YZ	250	FGY (60th Anniversary Edition/270mm Disc)	2016 - 2016	FL
WR	450	FG/FH/FJ (270mm F Disc/4T)	2016 - 2021	FL
YZ	450	FGY (60th Anniversary Edition/270mm Disc)	2016 - 2016	FL
YZ	450	FX/FY (4T)	2008 - 2009	FL
YZ	450	FZ/FA/FB/FD/FE/FF (4T)	2010 - 2015	FL
YZ	450	FG/FH/FJ (270mm Disc)	2016 - 2019	FL

EQUIVALENTS OEM

5XC W0045 00	B29-25805-00

AD	S3	S33 RACING	GP5	GP6	GP7

1 set = 4 pcs

PART NUMBER

249

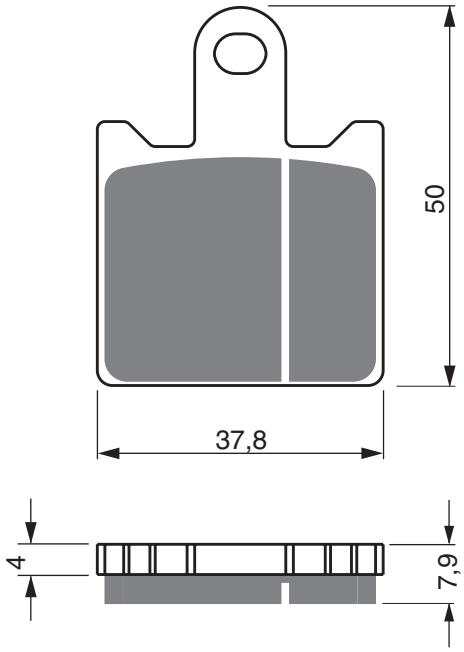

KAWASAKI

ZX-6R	600	(ZX 600 P7F/P8F)	2007 - 2007	FL	FR
ZX-6R	600	(ZX 600 R9F/RAF/RBF/RCF/RDF/REF/RFF/RGF 599cc)	2009 - 2016	FL	FR
Z	750	R (ZR 750 NBF/NCF) (Non ABS)	2011 - 2012	FL	FR
Z	750	R ABS (ZR 750 PBF/PCF)	2011 - 2012	FL	FR
Z	1 000	(ZR 1000 B7F/B8F/B9F)	2007 - 2009	FL	FR
Z	1 000	ABS (ZR 1000 C7F/C8F/C9F)	2007 - 2009	FL	FR
GTR	1 400	(ZG 1400 A8F/A9F/CAF/CBF/CCF/CDF/CEF/EEF/EGF/EHF/EHJ)	2008 - 2020	FL	FR
ZZR	1 400	(ZX 1400 A6F/A7F)	2006 - 2007	FL	FR
ZZR	1 400	ABS (ZX 1400 B6F/B7F)	2006 - 2007	FL	FR
ZZR	1 400	ABS (ZX 1400 D8F/DAF/DBF/FCF/FDF/FEF/FFF/HGF/HHF/HJF)	2008 - 2020	FL	FR
ZZR	1 400	Special Edition (ZX 1400 FDFA/FEFA/FEFB/FFFA)	2012 - 2016	FL	FR

EQUIVALENTS OEM

43082 0053	43082 0071	43082 0072	43082 0118	43082 0104	43082 0122	43082 162

PART NUMBER

250

AD | S3

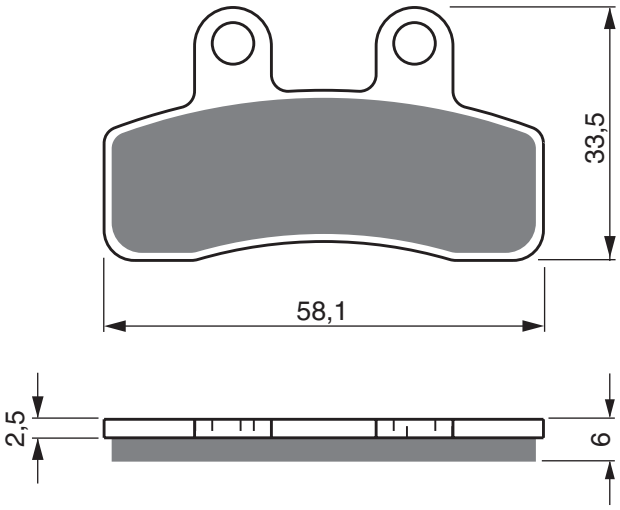

ELSTARS					
		Pit Bikes - Various Models (Check parts before fitting)		FL	RR
GENERIC					
SM	50	Mini Trigger	2008 - 2009	FL	RR
X	50	Mini Trigger	2008 - 2009	FL	RR
ITALJET					
	50	Pit Jet (2T)	2007 - 2009	FL	RR
	125	Pit Jet (4T Pro)	2007 - 2009	FL	RR
LIFAN					
LF	125	Off Road	2007 - 2007	FL	
MOTOM					
	50	Spasso	2008 - 2009	FL	
ORION					
AGB	34		2007 -	FL	RR
QUADZILLA					
WK	140		2006 - 2008	FL	FR
STOMP MINI MOTO					
	125	Elite	2007 - 2009	FL	

EQUIVALENTS OEM

1-290025	3-290055

AD	S3	S33 RACING	GP5	GP6	GP7

PART NUMBER

251

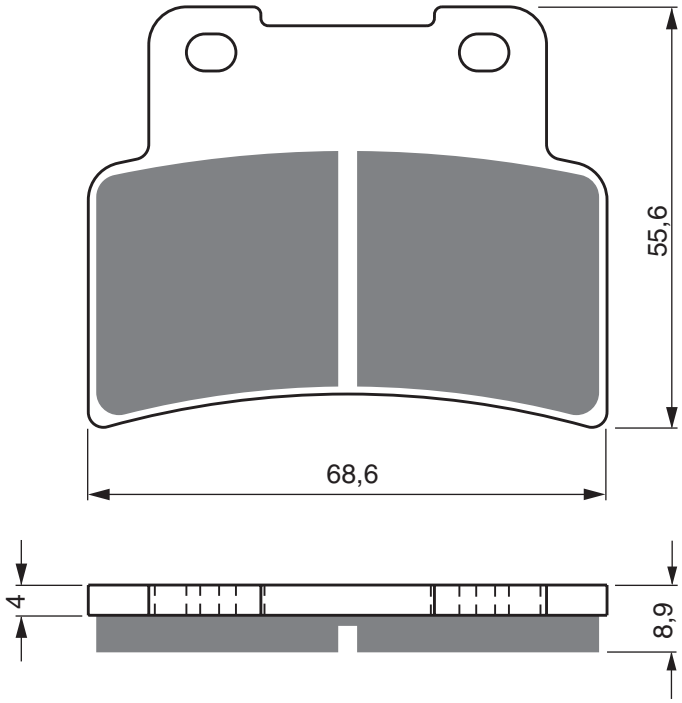

APRILIA

RS	125	(Radial Caliper model) 2T	2006 - 2012	FL	
	750	Dorsoduro (ABS)	2008 - 2016	FL	FR
	750	Shiver (RAE00/STD & ABS)	2010 - 2016	FL	FR
	750	Shiver GT (ABS)	2010 - 2012	FL	FR
SL	750	Shiver (RA000)	2007 - 2010	FL	FR
SL	750	Shiver GT	2009 - 2010	FL	FR
	850	Mana (ABS)	2008 - 2013	FL	FR
	850	Mana (Non ABS)	2008 - 2011	FL	FR
	850	Mana GT (ABS Model)	2009 - 2016	FL	FR
	900	Dorsoduro (ABS)	2017 - 2021	FL	FR
	900	Shiver (ABS)	2017 - 2021	FL	FR

KYMCO

	400	i X-Citing	2012 - 2020	FL	FR
	400	i X-Citing S	2017 - 2020	FL	FR

YAMAHA

MT	125	(Non ABS)	2014 - 2016	FL	
MT	125	A (ABS)	2014 - 2021	FL	
YZF-R	125	(Radial F/Caliper/Non ABS)	2014 - 2016	FL	
YZF-R	125	A (Radial F/Caliper/ABS)	2014 - 2021	FL	

EQUIVALENTS OEM

8133943	897118	45105 LKF 305	5D7 F5805 00

PART NUMBER

252

AD	K1	K5	S3

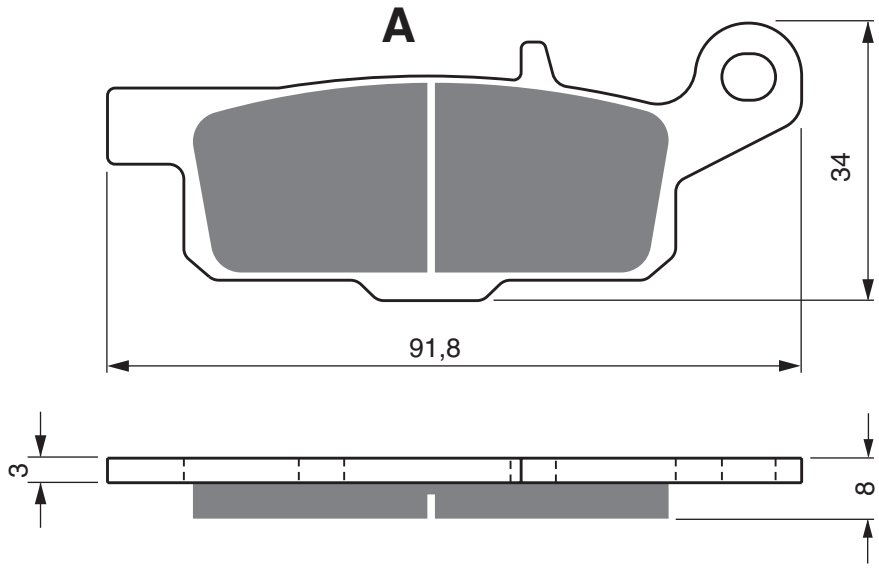

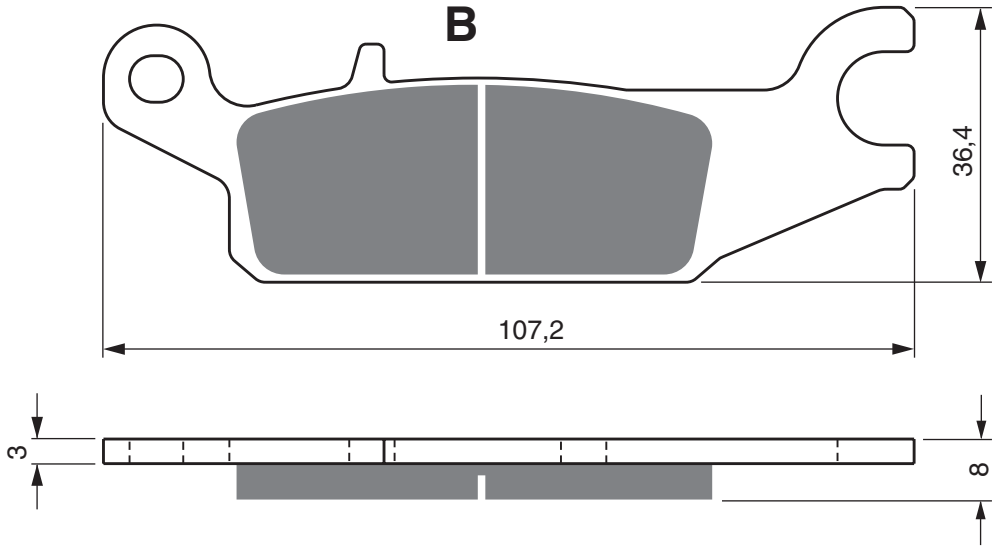

YAMAHA

YFM	250	R (33B)	2009 - 2011	FL
YFM	250	R (IBT)	2012 - 2013	FL
YFM	250	RX/RY Raptor	2008 - 2009	FL
YFM	550	FWA Grizzly IRS	2011 - 2014	FL
YFM	550	FWAD Grizzly EPS (Power Steering)	2011 - 2014	FL
YFM	700	FWAD Grizzly EPS	2007 - 2018	FL

EQUIVALENTS OEM

3B4 W0045 00	4D3 W0045 00

AD | K1 | K5 | S3

PART NUMBER

253

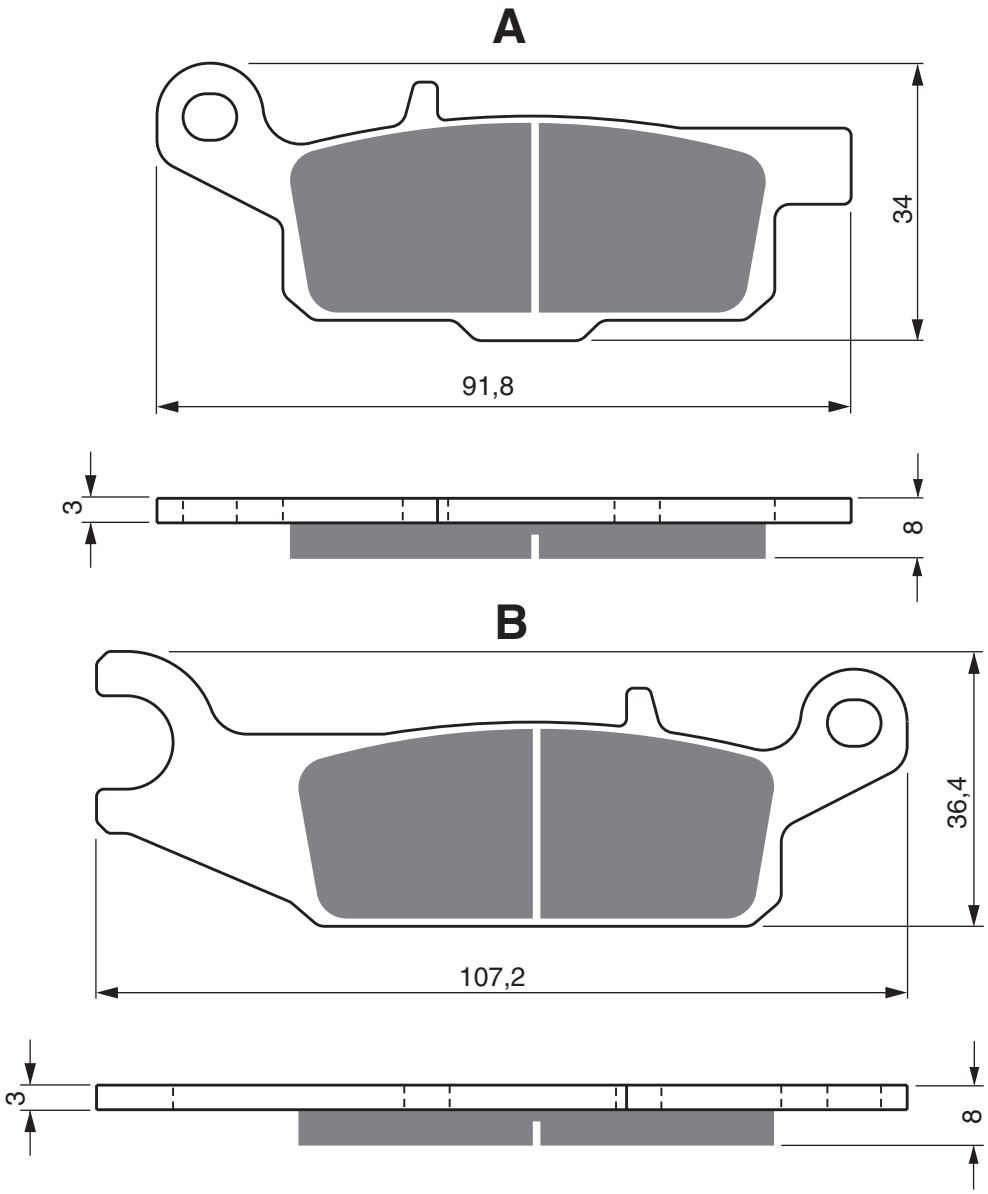

YAMAHA

YFM	250	R (33B)	2009 - 2011	FR
YFM	250	R (IBT)	2012 - 2013	FR
YFM	250	RX/RY Raptor	2008 - 2009	FR
YFM	550	FWA Grizzly IRS	2011 - 2014	FR
YFM	550	FWAD Grizzly EPS (Power Steering)	2011 - 2014	FR
YFM	700	FWAD Grizzly EPS	2007 - 2018	FR

EQUIVALENTS OEM

3B4 W0045 10	4D3 W0045 10

PART NUMBER

254

AD	K1	K5	S3

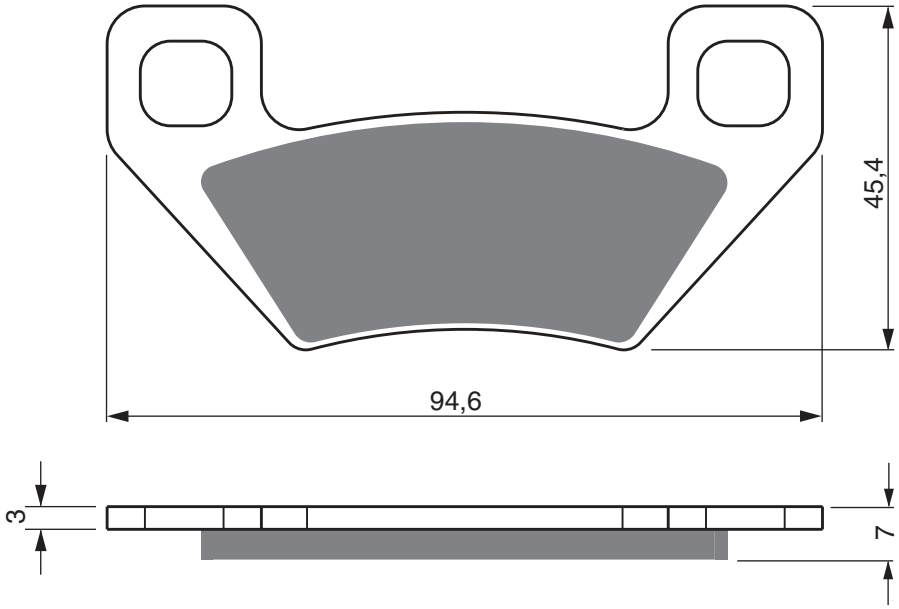

ARCTIC CAT

	250	(2x4) (Utility)	2005 - 2009	FL	FR	RR
	250	Utility (4x4)	2005 - 2008	FL	FR	RR
	300	(2x4) (Utility)	2005 - 2005	FL	FR	RR
	300	ATV	2010 - 2012	FL	FR	RR
	350	ATV	2012 - 2012	FL	FR	RR
	366	4x4 Auto Utility	2008 - 2009	FL	FR	RR
	366	SE	2010 - 2010	FL	FR	RR
	400	4x4 Auto LE Utility	2005 - 2007	FL	FR	RR
	400	4x4 Auto TBX Utility	2005 - 2006	FL	FR	RR
	400	4x4 Auto TRV Multirider	2006 - 2006	FL	FR	RR
	400	4x4 Auto TRV Plus Multirider	2007 - 2007	FL	FR	RR
	400	4x4 Auto Utility	2005 - 2008	FL	FR	RR
	400	4x4 Auto VP Utility	2005 - 2006	FL	FR	RR
	400	4x4 VP Utility	2005 - 2006	FL	FR	RR
	400	Alterra	2016 - 2020	FL	FR	RR
	400	ATV (Core Mid Size)	2013 - 2014	FL	FR	RR
	400	TRV	2009 - 2009	FL	FR	RR
	400	TRV	2013 - 2013	FL	FR	RR
	400	TRV H1	2010 - 2010	FL	FR	RR
	425	i	2012 - 2012	FL	FR	RR
	425	i SE	2012 - 2012	FL	FR	RR
	450	Alterra	2016 - 2016	FL	FR	RR
	450	ATV (Core/Midsize)	2013 - 2014	FL	FR	RR
	450	H1 EFi	2010 - 2010	FL	FR	RR
	450	i	2011 - 2012	FL	FR	RR
	450	i GT	2012 - 2012	FL	FR	RR
	450	i TRV	2011 - 2011	FL	FR	RR
	450	i XC	2013 - 2014	FL	FR	RR
	450	TRV	2011 - 2012	FL	FR	RR
XC	450	i	2011 - 2012	FL	FR	RR
	500	4x4 Auto LE Utility	2005 - 2006	FL	FR	RR
	500	4x4 Auto TBX Utility	2005 - 2006	FL	FR	RR
	500	4x4 Auto TRV Multirider	2005 - 2008	FL	FR	RR
	500	4x4 Auto Utility	2005 - 2008	FL	FR	RR
	500	4x4 Utility (Manual G-Box)	2005 - 2009	FL	FR	RR
	500	Alterra	2016 - 2020	FL	FR	RR
	500	ATV (Midsize)	2013 - 2014	FL	FR	RR
	500	ATV XT (Midsize)	2013 - 2014	FL	FR	RR
	500	Prowler HDX	2014 - 2014	FL	FR	RR
	500	Prowler HDX LTD	2014 - 2014	FL	FR	RR
	500	Prowler HDX XT	2014 - 2020	FL	FR	RR
	500	TRV (Core/2 Up)	2013 - 2014	FL	FR	RR
	550	Alterra TRV and XT	2016 - 2020	FL	FR	RR
	550	ATV (Mid Size)	2013 - 2014	FL	FR	RR
	550	ATV XT (Mid Size)	2013 - 2014	FL	FR	RR
	550	H1 EFI	2009 - 2010	FL	FR	RR
	550	i	2011 - 2012	FL	FR	RR
	550	i GT	2011 - 2012	FL	FR	RR
	550	i GT TRV	2011 - 2011	FL	FR	RR
	550	i TRV Cruiser	2011 - 2011	FL	FR	RR
	550	LTD EFI	2011 - 2012	FL	FR	RR
	550	Prowler 4x4	2009 - 2014	FL	FR	RR
	550	S	2010 - 2010	FL	FR	RR
	550	S Ltd	2010 - 2010	FL	FR	RR
	550	TRV	2011 - 2011	FL	FR	RR
	550	TRV Cruiser	2011 - 2011	FL	FR	RR
	550	TRV EFi	2009 - 2010	FL	FR	RR
	550	TRV Hi EFi LE	2009 - 2010	FL	FR	RR
	550	TRV Ltd (2 Up)	2013 - 2014	FL	FR	RR
	550	TRV S GT	2010 - 2010	FL	FR	RR
TRV	550	(GT EFI 2 Up)	2011 - 2012	FL	FR	RR
	570	Alterra EPS and XT	2019 - 2020	FL	FR	RR
	650	H1	2010 - 2010	FL	FR	RR
	650	H1 4x4 Auto LE Utility	2007 - 2007	FL	FR	RR
	650	H1 4x4 Auto TBX Utility	2007 - 2007	FL	FR	RR

AD | K1 | K5 | S3

PART NUMBER

254

	650	H1 4x4 Auto Utility	2007 - 2007	FL	FR	RR
	650	H1 4x4 SE Utility	2006 - 2006	FL	FR	RR
	650	H1 4x4 TRV Plus LE Multirider	2007 - 2007	FL	FR	RR
	650	H1 Mudpro	2010 - 2011	FL	FR	RR
	650	H1 Prowler	2007 - 2007	FL	FR	RR
	650	H1 TRV	2009 - 2009	FL	FR	RR
	650	Prowler 4x4 Auto/M4	2008 - 2008	FL	FR	RR
	650	V2 4x4 Auto LE Utility	2004 - 2005	FL	FR	RR
	650	V2 4x4 Auto Utility	2004 - 2006	FL	FR	RR
	650	V2 4x4 LE TS Utility	2006 - 2006	FL	FR	RR
TBX	650		2009 - 2009	FL	FR	RR
	700	Alterra inc XT and Mudpro	2016 - 2020	FL	FR	RR
	700	Alterra TBX	2017 - 2020	FL	FR	RR
	700	Alterra VLX	2017 - 2020	FL	FR	RR
	700	ATV Diesel	2012 - 2014	FL	FR	RR
	700	ATV Ltd	2012 - 2014	FL	FR	RR
	700	ATV XT	2013 - 2014	FL	FR	RR
	700	ATV/Core	2013 - 2014	FL	FR	RR
	700	Diesel Utility	2011 - 2012	FL	FR	RR
	700	EFi 4x4 Auto M4	2008 - 2008	FL	FR	RR
	700	EFi 4x4 Auto TRV LE	2008 - 2008	FL	FR	RR
	700	EFi 4x4 SE Utility	2006 - 2006	FL	FR	RR
	700	EFi 4x4 Utility LE Auto	2007 - 2007	FL	FR	RR
	700	EFi Cruiser	2008 - 2008	FL	FR	RR
	700	H1 EFi	2009 - 2010	FL	FR	RR
	700	H1 EFi 4x4 Auto SE	2008 - 2009	FL	FR	RR
	700	H1 EFi LE	2009 - 2010	FL	FR	RR
	700	H1 EFi Mudpro	2009 - 2011	FL	FR	RR
	700	i	2011 - 2012	FL	FR	RR
	700	i GT	2011 - 2012	FL	FR	RR
	700	i LTD	2011 - 2012	FL	FR	RR
	700	i Mudpro	2011 - 2012	FL	FR	RR
	700	Mudpro	2010 - 2011	FL	FR	RR
	700	Mudpro i LTD	2011 - 2011	FL	FR	RR
	700	Prowler HDX LTD	2014 - 2014	FL	FR	RR
	700	S	2010 - 2010	FL	FR	RR
	700	S Ltd	2010 - 2010	FL	FR	RR
	700	Super Duty Diesel	2010 - 2011	FL	FR	RR
	700	TBX H1 EFi	2010 - 2010	FL	FR	RR
	700	TBX Ltd	2011 - 2011	FL	FR	RR
	700	TRV	2011 - 2011	FL	FR	RR
	700	TRV Cruiser	2011 - 2011	FL	FR	RR
	700	TRV GT	2011 - 2011	FL	FR	RR
	700	TRV H1 EFi Cruiser	2009 - 2010	FL	FR	RR
	700	TRV XT	2013 - 2014	FL	FR	RR
	700	Wildcat Trail XT inc LTD	2015 - 2020	FL	FR	RR
HDX	700	i Prowler	2011 - 2014	FL	FR	RR
XR	700	LTD and XT	2015 - 2020	FL	FR	RR
XTX	700		2010 - 2011	FL	FR	RR
XTX	700	Hi EFI Prowler	2009 - 2009	FL	FR	RR
XTX	700	Hi LE Prowler	2008 - 2008	FL	FR	RR
XTX	700	i Prowler	2011 - 2017	FL	FR	RR
	1 000	Alterra TRV, XT and EPS	2017 - 2020	FL	FR	RR
	1 000	GT	2011 - 2012	FL	FR	RR
	1 000	Mudpro H2 EFi	2011 - 2012	FL	FR	RR
	1 000	Mudpro LTD	2013 - 2014	FL	FR	RR
	1 000	Mudpro SE EPS	2016 - 2020	FL	FR	RR
	1 000	Thundercat H2	2008 - 2010	FL	FR	RR
	1 000	Thundercat H2 LE	2010 - 2010	FL	FR	RR
	1 000	TRV Cruiser	2011 - 2011	FL	FR	RR
	1 000	TRV H2 EFi	2010 - 2010	FL	FR	RR
	1 000	TRV H2 EFI Cruiser 2 Up	2009 - 2010	FL	FR	RR
	1 000	Wildcat	2013 - 2014	FL	FR	RR
	1 000	Wildcat 4	2013 - 2016	RL	RR	
	1 000	Wildcat 4X	2014 - 2016	RL	RR	
	1 000	Wildcat 4X LTD	2014 - 2015	RR		
	1 000	Wildcat i GTi	2012 - 2012	FL	FR	RR
	1 000	Wildcat Ltd	2013 - 2014	FL	FR	RR
	1 000	XT	2013 - 2014	FL	FR	RR
XTZ	1 000		2010 - 2014	FL	FR	RR
XTZ	1 000	H2 EFi Prowler	2009 - 2009	FL	FR	RR
KYMCO						
	400	Maxxer	2009 - 2010	FL	FR	RR
MXU	400	(A40000)	2008 - 2011	FL	FR	RR
	450	Maxxer i (4T)	2010 - 2015	FL	FR	RR
MXU	450	i IRS	2011 - 2012	FL	FR	RR
MXU	450	i IRS	2012 - 2018	FL	FR	RR
MASSEY FERGUSON						
MF	400	4WD Auto (386cc)	2005 - 2009	FL	FR	RR
MF	500	4WD Auto (493cc)	2005 - 2009	FL	FR	RR
MF	650	/4WD Auto (641cc)	2005 - 2009	FL	FR	RR
MF	650	2 cyl./4WD Auto (633cc)	2005 - 2009	FL	FR	RR
MF	700	D/4WD Auto (686cc Diesel)	2005 - 2008	FL	FR	RR
PIAGGIO VESPA						
	400	Trackmaster Quad	2006 - 2006	FL	FR	RR
POLARIS						
	300	Hawkeye 2x4	2006 - 2006	FL	FR	RR
	300	Hawkeye 4x4	2006 - 2006	FL	FR	RR

EQUIVALENTS OEM

0502-604	0502-875	2203045	1436-165	45105 PWB 1305	1436-420	1502-694

PART NUMBER

255

AD	K1	K5	S3

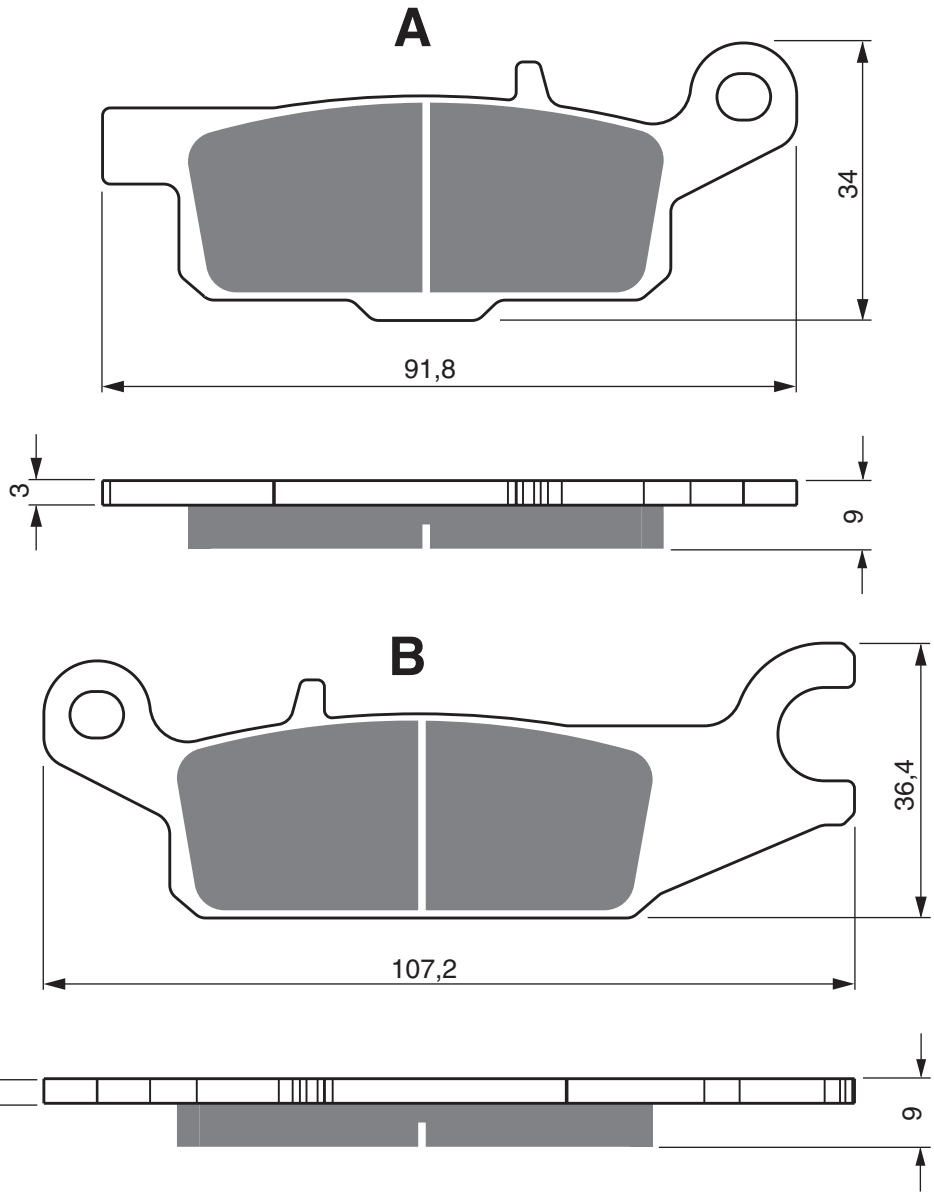

YAMAHA

YFM	550	FWA Grizzly IRS	2011 - 2014	RL
YFM	550	FWAD Grizzly EPS (Power Steering)	2011 - 2014	RL
YFM	700	FWAD Grizzly EPS	2007 - 2018	RL

EQUIVALENTS OEM

3B4 W0046 00

AD | K1 | K5 | S3

PART NUMBER

256

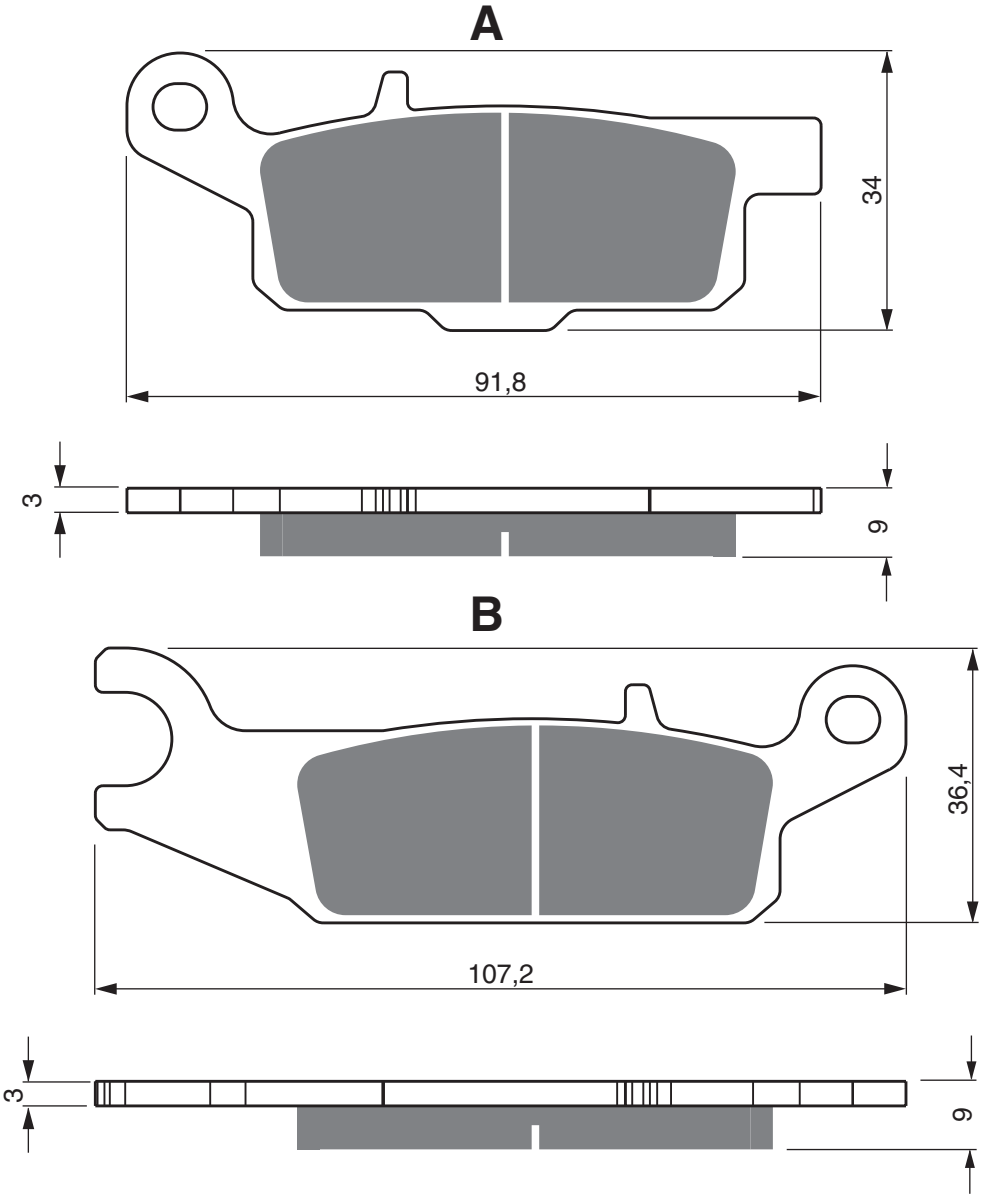

YAMAHA

YFM	550	FWA Grizzly IRS	2011 - 2014	RR
YFM	550	FWAD Grizzly EPS (Power Steering)	2011 - 2014	RR
YFM	700	FWAD Grizzly EPS	2007 - 2018	RR

EQUIVALENTS OEM

3B4 W0046 10

PART NUMBER

257

AD	S3	S33 RACING	GP5	GP6	GP7

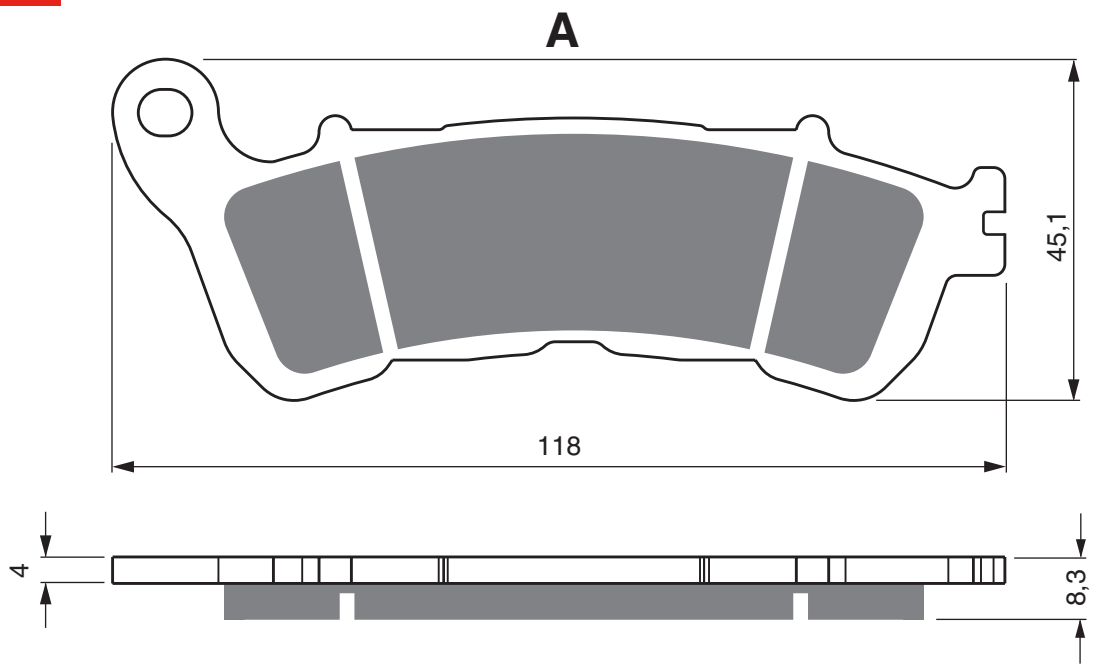

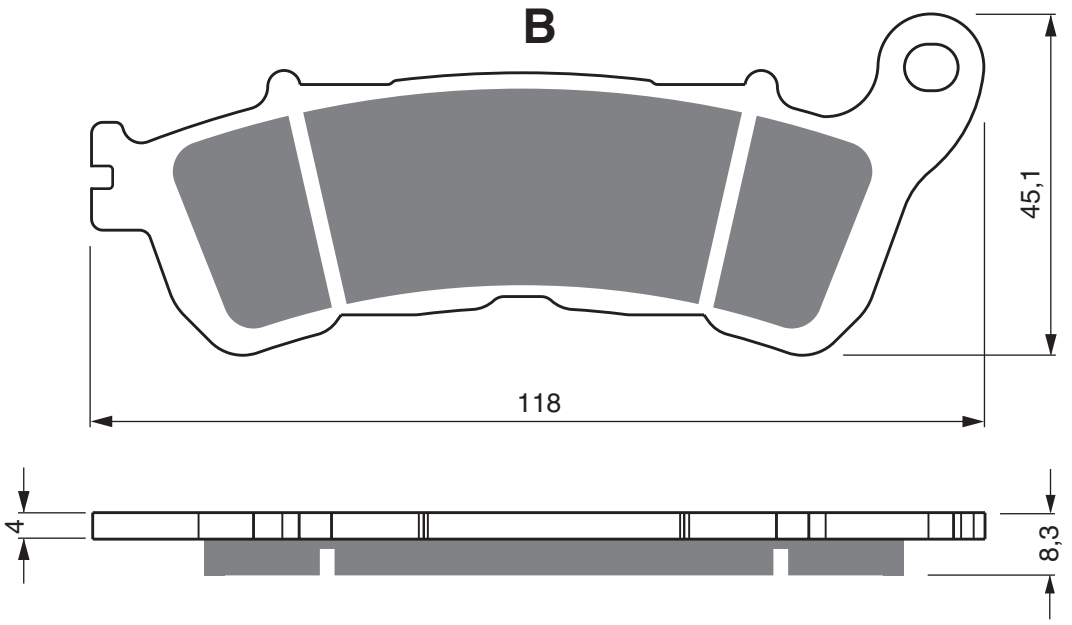

HONDA

FES	125	7/9/A S-Wing (Non ABS Model)	2007 - 2013	FL
FES	125	A7/A9/AA S-Wing (ABS Model)	2007 - 2015	FL
SH	125	i (3 Piston Caliper/ABS)	2014 - 2016	FL
SH	125	i 9/A/B (Fuel Injection/Rear Disc Model)	2009 - 2012	FL
SH	125	i RA (Fuel Injection/rear disc model)	2010 - 2014	FL
FES	150	7/9/A S-Wing	2007 - 2013	FL
FES	150	S-Wing A7/A9/AA (ABS Model)	2007 - 2013	FL
SH	150	i (3 Piston Caliper/ABS]	2014 - 2021	FL
SH	150	i 9/A/B (Fuel Injection/Rear Disc Model)	2009 - 2012	FL
SH	150	RA (Fuel Injection/rear disc model)	2010 - 2014	FL
CBR	250	RAB/RAC (ABS)	2011 - 2013	FL
NSS	250	AX5/AX6 Forza Z (ABS)	2005 - 2007	FL
NSS	250	EX5/EX7/EX8 Forza EX (ABS)	2005 - 2008	FL
NSS	250	X5/X7/X8 Forza X	2005 - 2008	FL
PS	250	5/6 Big Ruckus	2005 - 2006	FL
NSS	300	AD Forza (ABS)	2013 - 2017	FL
NSS	300	D Forza (Non ABS)	2013 - 2015	FL
SH	300	i (ABS)	2014 - 2014	FL
SH	300	i 7/8/9/A/B (Non ABS)	2007 - 2012	FL
SH	300	i A7/A8/A9/AA/AB/AC (ABS Model)	2007 - 2013	FL
SH	300	i AR8/AR9/ARA (ABS Model)	2008 - 2010	FL

AD | S3 | S33 RACING | GP5 | GP6 | GP7

PART NUMBER

257

SH	300	R8/R9/RA (Non ABS)	2008 - 2010	FL		
SW-T	400	(FJS 400 A9/AB) ABS	2009 - 2016	FL		
SW-T	400	(FJS 400 D9)	2009 - 2009	FL		
CBF	500	A4/A5/A6/A7 (ABS Model)	2004 - 2007	FL		
CB	600	FA7/FA8/FA9/FAA/FAB/FAC Hornet (ABS)	2007 - 2013	FL	FR	
CBF	600	NA8/NA9/NAA (ABS)	2008 - 2011	FL	FR	
CBF	600	SA8/SA9/SAA (ABS/Non ABS)	2008 - 2012	FL	FR	
CBR	600	FAB/FAC (ABS)	2011 - 2013	FL	FR	
SW-T	600	(FJS 600 AB) (ABS Model)	2011 - 2016	FL		
DN-01	680	(NSA 700 A8/A9)	2008 - 2011	FL	FR	
NC	700	DC Integra Scooter	2012 - 2014	FL		
NC	700	SA (ABS)	2012 - 2013	FL		
NC	700	SD (ABS/DCT)	2012 - 2014	FL		
NC	700	XA (ABS)	2012 - 2013	FL		
NC	700	XD (ABS/DCT)	2012 - 2014	FL		
NT	700	V6/V7/V8/VA Deauville	2006 - 2013	FL	FR	
NT	700	VA6/VA7/VA8/VAA Deauville (ABS)	2007 - 2013	FL	FR	
XL	700	VA8/VA9/VAA Transalp (3 Piston Front Caliper/ ABS Front & Rear wheels)	2008 - 2011	FL	FR	
VT	750	C Shadow Aero	2018 - 2020	FL		
VT	750	C Shadow Aero (ABS)	2018 - 2020	FL		
VT	750	CS2A/C25B Shadow (3 piston caliper/rear dis-c/17"front wheel)	2010 - 2012	FL		
VFR	800	6/8/9	2006 - 2009	FL	FR	
VFR	800	A6/A8/A9	2006 - 2013	FL	FR	
VFR	800	XB/XC/XD (Crossrunner ABS)	2011 - 2013	FL	FR	
CB	1 000	R (ABS Model)	2009 - 2016	FL	FR	
CBF	1 000	A A6/A7/A8/A9/AA (3 Piston Front Caliper / ABS)	2006 - 2010	FL	FR	RR
CBF	1 000	FA FAA (3 Piston Front Caliper / ABS Model)	2010 - 2015	FL	FR	
CBF	1 000	FS FSA (3 Piston Front Caliper / ABS Model)	2010 - 2011	FL	FR	
CBF	1 000	FT FTA (3 Piston Front Caliper / ABS Model)	2010 - 2011	FL	FR	
CBF	1 000	S S7/S8/S9/SA (3 Piston Front Caliper / ABS)	2007 - 2011	FL	FR	RR
CBF	1 000	T T7/T8/T9/TA GT (3 Piston Front Caliper / ABS)	2007 - 2016	FL	FR	RR
XL	1 000	V7/V8/V9 Varadero (Non ABS Model)	2007 - 2011	FL	FR	
XL	1 000	VA4/VA5/VA6/VA7/VA8/VA9/VAA/VAB Varadero (ABS Model)	2004 - 2011	FL	FR	
CB	1 100	AD (Cast Wheels / 3 Piston Caliper)	2013 - 2013	FL	FR	
VFR	1 200	Crosstourer Highlander T/DCT	2015 - 2016	FL	FR	
VFR	1 200	XAC/XAD/XAE/XAF/XAH/XAJ Crosstourer (Manual G/Box)	2012 - 2018	FL	FR	
VFR	1 200	XDC/XDCD/XDE/XDF/XDG/XDH/XDJ DCT Crosstourer	2012 - 2018	FL	FR	
CTX	1 300	AE	2014 - 2017	FL	FR	
ST	1 300	8/9 Pan European (Non ABS)	2008 - 2009	FL	FR	
ST	1 300	A8/A9/AA-AE Pan European (ABS)	2008 - 2017	FL	FR	
VT	1 300	CTA Interstate	2011 - 2013	FL		
VT	1 300	CXAA (Fury/Chopper) (9 spoke wheel/ABS model)	2010 - 2020	FL	FR	
GL	1 800	BD Goldwing J (Manual)	2018 - 2020	RR		
GL	1 800	D Goldwing Tour J (DCT)	2018 - 2020	RR		
GL	1 800	DA Goldwing Tour Airbag J (DCT)	2018 - 2020	RR		
GL	1 800	Goldwing Tour J (Manual)	2018 - 2020	RR		
GL	1 800	J Goldwing (DCT)	2018 - 2020	RR		
SUZUKI						
UH	125	K7/K8/K9/L0/L1/L3 Burgman	2007 - 2013	FL		
UX	125	K8/K9/L0/L1 SIXteen	2008 - 2014	FL		
UX	150	K8/K9/L0/L1 SIXteen	2008 - 2014	FL		
UH	200	K7/K8/K9/L0/L1/L3 Burgman	2007 - 2013	FR		
C	1 800	R (VLR 1800 K8/K9/L0/L1) Intruder	2008 - 2013	FL	FR	
C	1 800	RT (VLR 1800 K8RT/K9RT) Touring Intruder	2008 - 2009	FL	FR	
VLR	1 800	RK8 (C1800R/C109R Intruder)	2008 - 2010	FL	FR	

EQUIVALENTS OEM

06455 MBT D51	06455 MET 651	06455 KSV J03	06455 KSV J41	06455 KSV J01	06455 MCS R01	06455 MCW H01
06456 MCW H01	06455 MFA D11	06455 MFA D12	06455 KTW 901	06456 MFF D01	06455 MGS D81	59101 03810
59100 22830	59300 22830	06455 MEH 006	06456 MEH 006	06455 MC5 R01	06455 MFR A01	59101 03820

PART NUMBER

258

AD	S3	S33 RACING	GP5	GP6	GP7	GPR

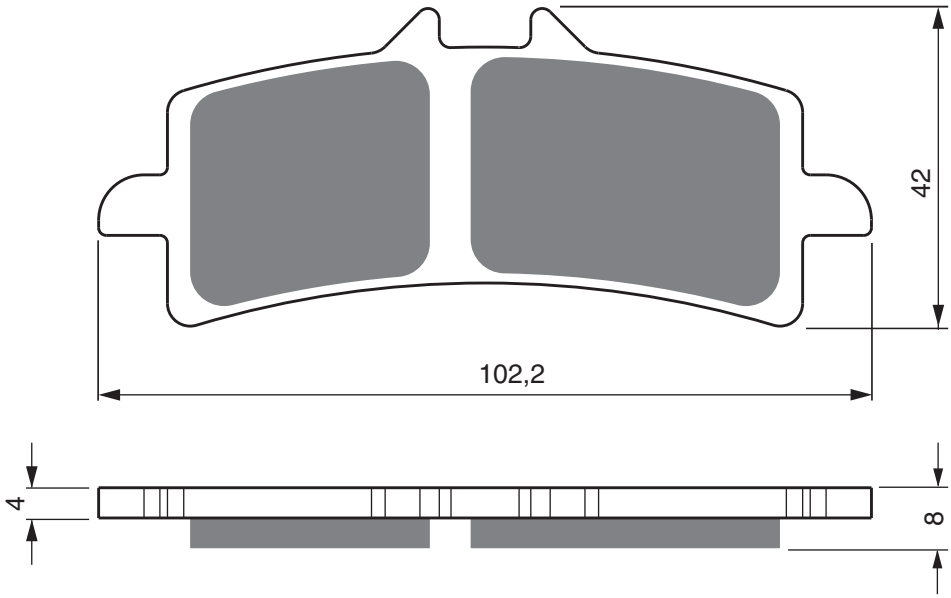

APRILIA

RSV4	1 000	Factory	2009 - 2010	FL	FR
RSV4	1 000	Factory APRC	2011 - 2013	FL	FR
RSV4	1 000	Factory APRC ABS	2013 - 2014	FL	FR
RSV4	1 000	R	2010 - 2010	FL	FR
RSV4	1 000	R APRC	2011 - 2013	FL	FR
RSV4	1 000	R APRC ABS	2013 - 2014	FL	FR
RSV4	1 000	RF	2015 - 2018	FL	FR
RSV4	1 000	RR	2015 - 2018	FL	FR
	1 100	Tuono Factory V4	2017 - 2018	FL	FR
	1 100	Tuono RR	2019 - 2020	FL	FR
	1 100	Tuono V4 Factory	2019 - 2021	FL	FR
RSV4	1 100	Factory	2019 - 2021	FL	FR
RSV4	1 100	RR	2019 - 2021	FL	FR

BENELLI

TNT	1 130	Tornado Naked Tre R	2013 - 2016	FL	FR

BIMOTA

DB8	1 078	SP	2012 - 2013	FL	FR
DB7	1 099		2009 - 2009	FL	FR
DB8	1 198		2010 - 2014	FL	FR
DB11	1 200	VLX	2012 - 2014	FL	FR

BMW

HP4			2013 - 2014	FL	FR
HP4		Carbon	2013 - 2014	FL	FR
HP4		Race	2019 - 2020	FL	FR
HP2	1 200	Sport (K29)	2008 - 2011	FL	FR

BREMBO RACING CALIPERS

		20 9883 Radial monobloc 100mm centres		FL	
		220B01010 Radial CNC caliper @ 108mm Spacing		FL	
		P4/34 (220 988 530) 100mm Radial Monobloc caliper		FL	
		P4/34 (220A39710) 108 mm Radial Monobloc caliper		FL	

DUCATI

	848	Evo (Monobloc front calipers)	2010 - 2013	FL	FR
	848	Evo Corse SE	2012 - 2013	FL	FR
	848	Evo Dark	2012 - 2012	FL	FR
RR	989	Desmosedici (D16RR)	2008 - 2008	FL	FR
	990	Supermoto R (SM-R)	2010 - 2011	FL	FR
	1 098		2007 - 2008	FL	FR
	1 098	R	2008 - 2009	FL	FR
	1 098	S	2007 - 2008	FL	FR
	1 098	S Tricolore	2007 - 2007	FL	FR
	1 100	EVO SP Hypermotard	2010 - 2012	FL	FR
	1 100	Hypermotard S	2008 - 2009	FL	FR
	1 100	Panigale V4 (1103cc)	2018 - 2021	FL	FR
	1 100	Panigale V4 S (1103cc)	2018 - 2021	FL	FR
	1 100	Panigale V4 SP (1103cc)	2021 - 2021	FL	FR
	1 100	Streetfighter (1099cc)	2009 - 2011	FL	FR
	1 100	Streetfighter S (1099cc)	2009 - 2013	FL	FR
	1 100	Streetighter V4 S (1103cc)	2019 - 2020	FL	FR
	1 103	Streetfighter V4	2019 - 2021	FL	FR
	1 103	Streetfighter V4 S	2019 - 2021	FL	FR
	1 158	Multistrada V4S	2021 - 2021	FL	FR
	1 198		2009 - 2011	FL	FR
	1 198	R Corse	2010 - 2010	FL	FR
	1 198	S	2009 - 2010	FL	FR
	1 198	S Corse	2009 - 2010	FL	FR
	1 198	SP	2011 - 2011	FL	FR
	1 199	Panigale	2012 - 2013	FL	FR
	1 199	Panigale ABS	2012 - 2015	FL	FR
	1 199	Panigale R	2013 - 2016	FL	FR
	1 199	Panigale S ABS	2012 - 2015	FL	FR
	1 199	Panigale S Tricolore	2012 - 2013	FL	FR
	1 199	Superleggera	2014 - 2014	FL	FR
	1 200	Diavel ABS	2011 - 2018	FL	FR
	1 200	Diavel AMG	2011 - 2012	FL	FR
	1 200	Diavel Carbon ABS	2011 - 2019	FL	FR
	1 200	Diavel Chromo ABS	2012 - 2012	FL	FR
	1 200	Diavel Dark (ABS)	2013 - 2014	FL	FR
	1 200	Diavel Diesel	2017 - 2018	FL	FR
	1 200	Diavel Strada	2013 - 2014	FL	FR
	1 200	Monster R	2016 - 2018	FL	FR
	1 200	Monster S	2014 - 2021	FL	FR
	1 200	Monster Stripe	2015 - 2019	FL	FR
	1 200	Multistrada Touring	2015 - 2017	FL	FR
	1 200	S Multistrada	2015 - 2018	FL	FR
	1 200	S Multistrada D Air	2015 - 2017	FL	FR
	1 200	S Multistrada D Air DVT	2015 - 2017	FL	FR
	1 200	S Multistrada DVT	2015 - 2017	FL	FR
	1 200	S Multistrada Pikes Peak	2016 - 2017	FL	FR
	1 200	S Multistrada Touring	2015 - 2018	FL	FR
	1 260	Multistrada Enduro	2018 - 2020	FL	FR
	1 260	Multistrada S Grand Tour	2019 - 2020	FL	FR
	1 260	S Multistrada	2018 - 2020	FL	FR
	1 260	S Multistrada D Air	2018 - 2020	FL	FR
	1 260	S Multistrada Pikes Peak	2018 - 2020	FL	FR
	1 262	Diavel Diesel	2017 - 2018	FL	FR
	1 262	XDiavel S	2016 - 2021	FL	FR
	1 299	Panigale	2015 - 2018	FL	FR
	1 299	Panigale R	2015 - 2017	FL	FR

AD | S3 | S33 RACING | GP5 | GP6 | GP7 | GPR

PART NUMBER

258

	1 299	Panigale R Final Edition	2018 - 2018	FL	FR
	1 299	Panigale S	2015 - 2018	FL	FR
	1 299	Panigale V4 Corse/Speciale	2018 - 2020	FL	FR
	1 299	Panigale V4 R	2019 - 2020	FL	FR
	1 299	Superleggera	2017 - 2017	FL	FR
ENERGICA ELECTRIC					
		Electric EGO	2020 - 2021	FL	FR
		Electric EVA	2020 - 2021	FL	FR
		Electric EVA Esse Esse 9	2020 - 2021	FL	FR
		Electric EVA Ribelle	2021 - 2021	FL	FR
		Electric EVA Ribelle RS	2021 - 2021	FL	FR
HONDA					
CBR	1 000	Fireblade 8 Ball ABS	2020 - 2020	FL	FR
CBR	1 000	RR-SP Fireblade (CBR 1000 SE/SF/SG) (Non ABS)	2014 - 2016	FL	FR
CBR	1 000	RR-SP Fireblade (CBR1000 SAE/SAF/SAG/SAH/SAJ/SAK - Brembo Front Caliper) (ABS)	2014 - 2021	FL	FR
CBR	1 000	RR-SP TT-Edition (ABS)	2016 - 2016	FL	FR
RC213	1 000	V-S	2015 - 2017	FL	FR
HUSQVARNA					
	900	Nuda R	2012 - 2013	FL	FR
KAWASAKI					
H2	1 000	Ninja (ZX 1000 NFF/NGF)	2015 - 2016	FL	FR
H2	1 000	Ninja (ZX1000 XHF/XJF)	2017 - 2020	FL	FR
H2	1 000	Ninja Carbon (ZX1000 XHFA/XJFA)	2017 - 2020	FL	FR
H2	1 000	Ninja H2 SX SE+ (ZX1002 DKF)	2019 - 2020	FL	FR
H2	1 000	R Ninja (ZX 1000 PFF/PGF)	2015 - 2016	FL	FR
H2	1 000	R Ninja (ZX1000 YHF/YJF)	2017 - 2020	FL	FR
Z	1 000	JHF/JJF (310mm Round Discs) (ABS)	2017 - 2021	FL	FR
Z	1 000	R JHF (310mm Round Discs) (ABS)	2017 - 2020	FL	FR
ZX 10R	1 000	Ninja SE	2018 - 2021	FL	FR
ZX-10R	1 000	Ninja ABS (ZX1000 SGF/SHF/SJF)	2016 - 2020	FL	FR
ZX-10R	1 000	Ninja KRT Replica (ZX1000 SGFA/SHFA/SJFA)	2016 - 2020	FL	FR
ZX-10R	1 000	Winter Test Edition (ZX1000 SGFB)	2016 - 2016	FL	FR
ZX-10RR	1 000	Ninja (ZX1000ZHF)	2017 - 2017	FL	FR
ZX10-R	1 000	Ninja ABS (ZX 1002 EKF/FKF)	2019 - 2020	FL	FR
ZZR	1 400	Performance Sport (ZX 1400 JGF/JHF/JJF)	2014 - 2020	FL	FR
KTM					
SMR	450	(Brembo F/caliper)	2014 - 2014	FL	
	690	R Duke (Multi Spoke Cast Wheels)	2013 - 2018	FL	
SM-R	990	Supermoto R	2010 - 2013	FL	FR
RC8	1 190		2008 - 2011	FL	FR
RC8	1 190	R	2009 - 2015	FL	FR
RC8	1 190	Track (1190cc)	2009 - 2015	FL	FR
	1 290	Super Duke GT	2016 - 2021	FL	FR
	1 290	Super Duke R	2014 - 2021	FL	FR
	1 290	Super Duke R SE	2016 - 2018	FL	FR
MOTUS					
MSTR			2014 - 2018	FL	FR
MV AGUSTA					
F3	675	RC	2015 - 2018	FL	FR
F3	675	Serie Oro	2012 - 2013	FL	FR
F3	800		2014 - 2018	FL	FR
F3	800	Ago	2014 - 2015	FL	FR
F3	800	RC	2015 - 2020	FL	FR
	998	Frecce Tricolori	2010 - 2010	FL	FR
F4	998		2010 - 2015	FL	FR
F4	998	R	2012 - 2015	FL	FR
F4	998	RR	2010 - 2015	FL	FR
F4	998	RR Corsa Corta	2012 - 2012	FL	FR
F4	1 000	R 312 (Brembo 4 Pad Caliper from VIN 008065)	2008 - 2009	FL	FR
	1 078	Brutale RR	2008 - 2009	FL	FR
F4	1 078	RR 312	2009 - 2009	FL	FR
	1 090	Brutale RR	2010 - 2015	FL	FR
SUZUKI					
GSX-R	600	L1/L2/L3/L4/L5/L6/L7/L8	2011 - 2021	FL	FR
GSX-R	750	L1/L2/L3/L4/L5/L6/L7/L8/L9	2011 - 2021	FL	FR
GSX	1 000	Katana	2018 - 2021	FL	FR
GSX-R	1 000	A (Brembo Caliper / 320mm Disc ABS)	2017 - 2020	FL	FR
GSX-R	1 000	AL5/AL6 (Brembo Caliper / 310mm Disc ABS)	2015 - 2016	FL	FR
GSX-R	1 000	L2/L3/ZL3/L4/ZL4/L5/L6/L7 (Brembo Caliper)	2012 - 2017	FL	FR
GSX-R	1 000	R (Brembo Caliper/320mm Disc ABS)	2017 - 2021	FL	FR
GSX-S	1 000	AL6/AL7/AL8/AL9 (Naked/ABS)	2016 - 2020	FL	FR
GSX-S	1 000	FAL6/FAL7/FAL8/FAL9 (Faired/ABS)	2016 - 2020	FL	FR
GSX-S	1 000	FL6/FL7/FL8/FL9 (Faired/Non ABS)	2016 - 2020	FL	FR
GSX-S	1 000	L6/L7/L8/L9 (Naked/Non ABS)	2016 - 2020	FL	FR
GSX-R	1 300	Hayabusa (Brembo Calipers)	2013 - 2020	FL	FR
TM					
SMR	125	Tsi 306mm OD F-Disc	2019 - 2021	FL	
SMR	300	(2T) Tsi ES	2019 - 2021	FL	
SMX	300	(2T) 2S ES	2019 - 2021	FL	
SMR	450	Fi ES (4T)	2010 - 2021	FL	
SMR	530	Fi ES (4T)	2019 - 2021	FL	
TRIUMPH					
	675	Daytona R (Brembo Calipers F&R)	2013 - 2017	FL	FR
	675	Daytona R (Brembo F/Nissin R calipers)	2011 - 2012	FL	FR
	765	Street Triple R (Brembo 4 piston radial front calipers/ Brembo single piston rear caliper)	2017 - 2020	FL	FR
	765	Street Triple RS (Brembo 4 piston radial monobloc front calipers/Brembo single piston rear caliper)	2017 - 2020	FL	FR
	900	Tiger	2020 - 2021	FL	FR
	900	Tiger GT	2020 - 2021	FL	FR
	900	Tiger GT Low	2020 - 2021	FL	FR
	900	Tiger GT Pro	2020 - 2021	FL	FR
	900	Tiger Rally	2020 - 2021	FL	FR
	900	Tiger Rally Pro	2020 - 2021	FL	FR
	1 050	Speed Triple R (2 Pad Brembo caliper/Non ABS/5 Spoke wheel)	2012 - 2013	FL	FR
	1 050	Speed Triple R (2 Pad Brembo F/Caliper/ABS/10 Spoke wheel)	2014 - 2016	FL	FR
	1 050	Speed Triple R (2 Pad Brembo F/Caliper/ABS/5 Spoke wheel)	2012 - 2013	FL	FR
	1 050	Speed Triple R (2 Pad Brembo F/Caliper/Non ABS/10 Spoke wheel)	2014 - 2016	FL	FR
	1 050	Speed Triple R (ABS)	2017 - 2021	FL	FR
	1 050	Speed Triple RS (ABS)	2017 - 2021	FL	FR
	1 050	Speed Triple S (ABS)	2017 - 2021	FL	FR
	1 200	Speed Triple RS (ABS)	2021 - 2021	FL	FR
	1 200	Thruxton R (Liquid Cooled)	2016 - 2020	FL	FR
	1 200	Thruxton TFC (Liquid Cooled)	2019 - 2020	FL	FR

EQUIVALENTS OEM

61340791A	07 9882 10	690 13 030 000	34 11 710 743	8000B1663	T2021451	59100 14830
107 A486 49	8000B1601	8000B6714	8537251	8538735	07BB30RC	M497Z04
107988210	07BB3050	61340961A	59100 14850	43082 0157	43082 0162	06455 MGP D81
06455 MKF D61	61341101A	61341231A	06455-MKF-D61	43082-0171	59101 14870	T2027820
T2021541	1S9 F530K 00	3C1 F5805 10	2MP W00 45 00			

PART NUMBER

259

K5	S33 RACING	GP5	GP6	GP7

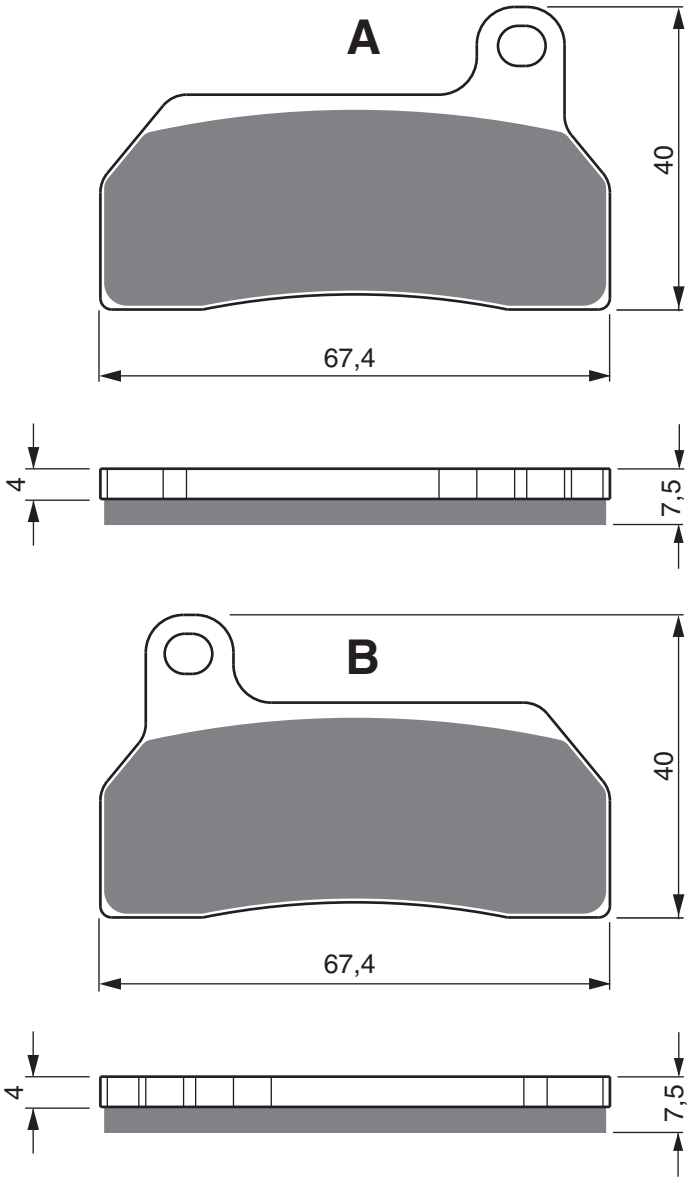

BREMBO RACING CALIPERS

P4 26/28 (XA1K480) FL

AD	K1	K5	S3	S33 RACING

PART NUMBER

260

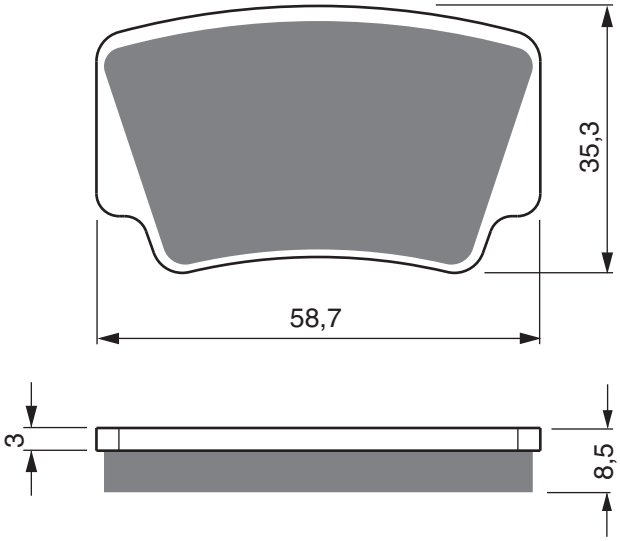

KTM

SX-F	450	(Quad)	2009 - 2011	RR
XC	450	(Quad)	2008 - 2010	RR
SX-F	505	(Quad)	2009 - 2012	RR
XC	525	(Quad)	2008 - 2012	RR

EQUIVALENTS OEM

830 13 090 100

PART NUMBER

261

AD	K1	K5	S3	S33 RACING

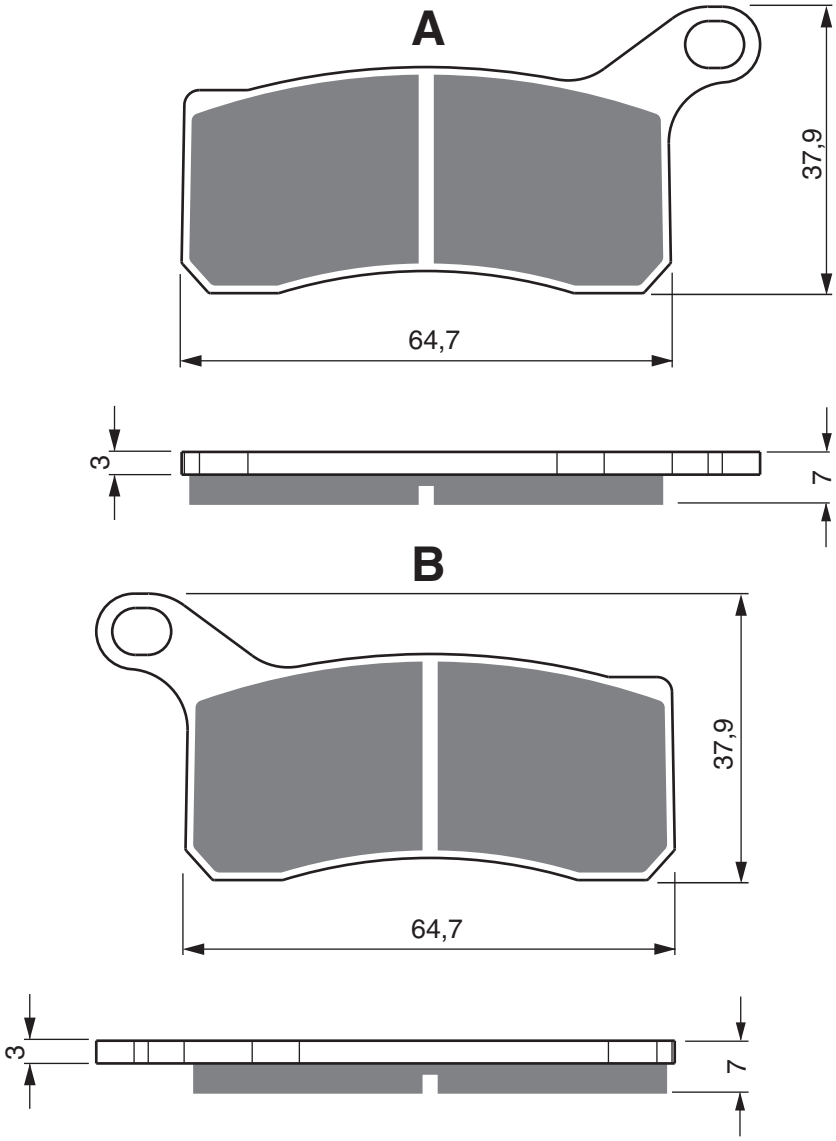

KTM

SX-F	450	(Quad)	2009 - 2011	FL	FR
XC	450	(Quad)	2008 - 2010	FL	FR
SX-F	505	(Quad)	2009 - 2012	FL	FR
XC	525	(Quad)	2008 - 2012	FL	FR

EQUIVALENTS OEM

830 13 030 100	K00979315

AD | S3

PART NUMBER

262

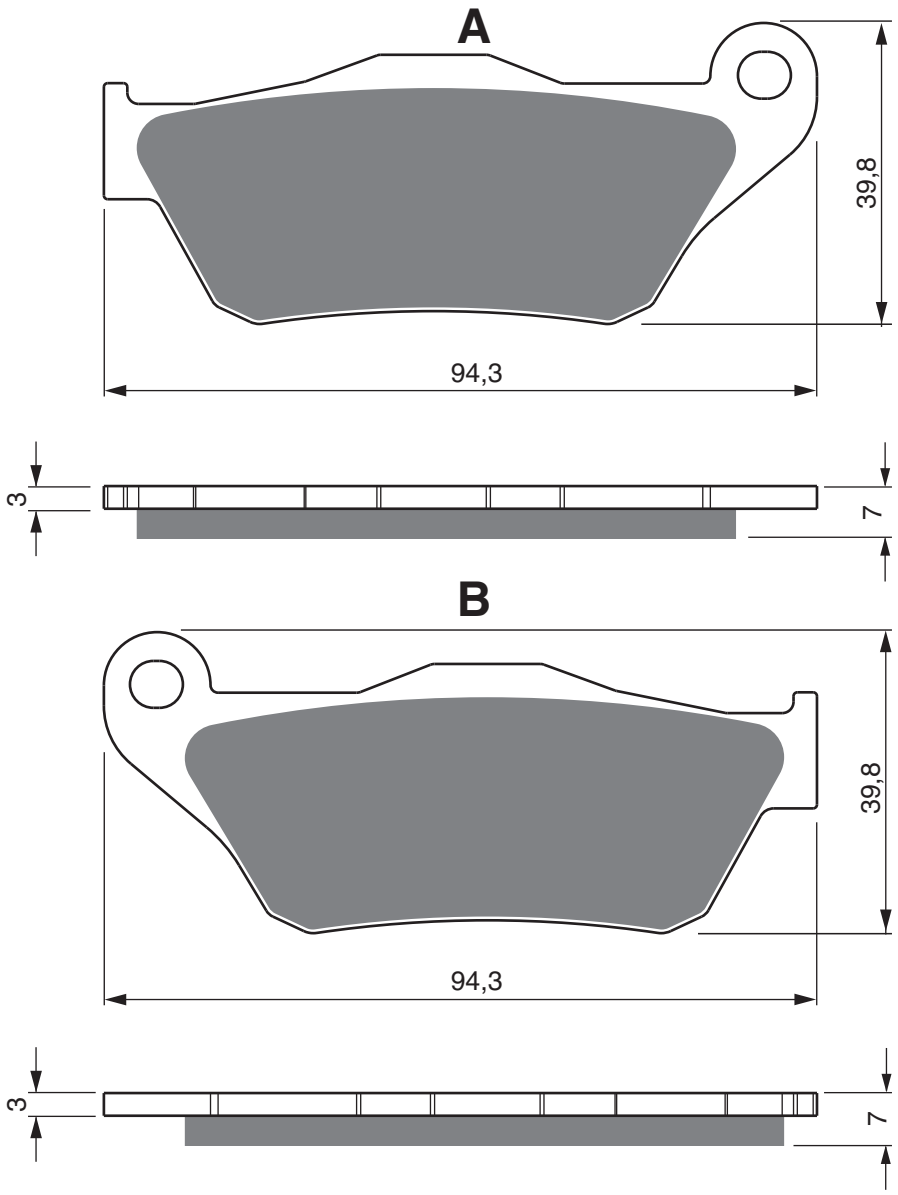

MBK

YP	125	Skycruiser	2006 - 2010	FL

YAMAHA

JP	125	X-City	2008 - 2008	FL
YP	125	R (X-Max)	2006 - 2009	FL
XP	250	R-X-Max (ICO) (Brembo Front Caliper / Non ABS)	2005 - 2009	FL
YP	250	R (X-Max)	2005 - 2009	FL

EQUIVALENTS OEM

1B9 W0045 00

PART NUMBER

263

AD | S3

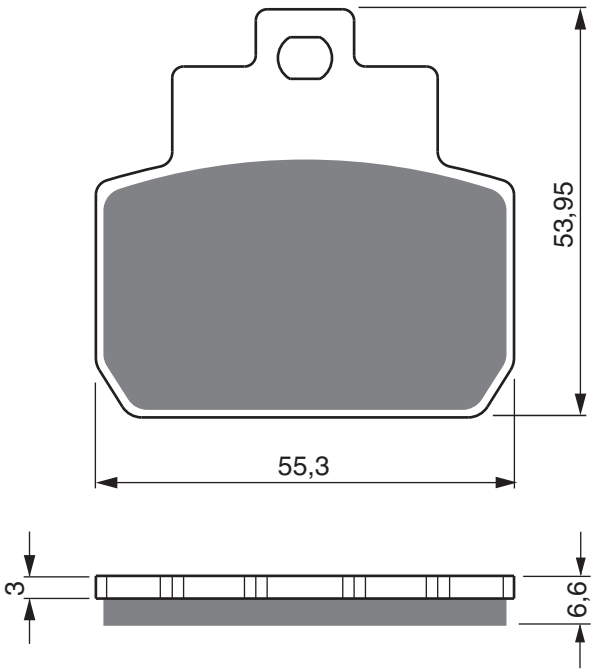

PIAGGIO VESPA

MP3	125	(Carb Models) (12" Rear Wheel)	2006 - 2008	RR
X8	125	(Heng Tong Rear Caliper)	2005 - 2006	RR
X8	125	ie (Heng Tong Rear Caliper)	2007 - 2007	RR
X8	150	Street	2007 - 2007	RR
MP3	250	(EFI) (12" Rear Wheel)	2006 - 2008	RR
X8	250	ie	2005 - 2007	RR
X9	250		2005 - 2006	RR
	500	Beverley	2006 - 2006	RR

EQUIVALENTS OEM

497429	647080	647400

AD	S3	S33 RACING	GP5	GP6

PART NUMBER

264

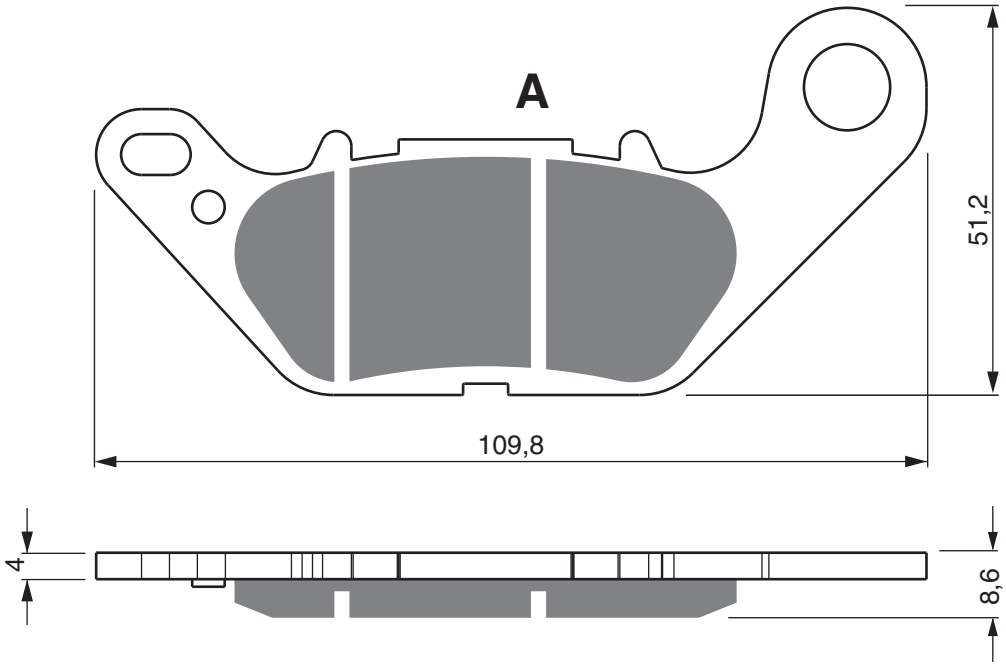

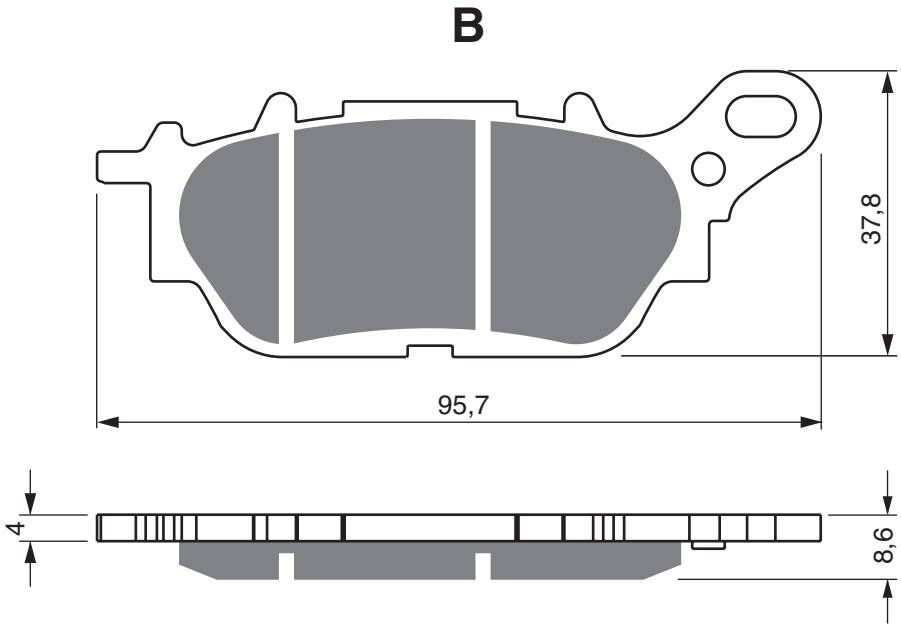

HONLEY

HD1	125		2014 - 2015	FL
HD2	125		2016 - 2017	FL
HD3	125		2016 - 2017	FL
HD3	125	SE	2016 - 2017	FL

LEXMOTO

	125	Aspire (TD125-43)	2012 - 2016	RR

MBK

XC	125	WAAP	2008 - 2010	FL

YAMAHA

XC	115	S-D'elight	2014 - 2016	FL
FZS25	125		2019 - 2021	FL
GPD	125	A-N-MAX / 2DS1	2015 - 2021	RR
MWS	125	Tricity Scooter (3 Wheeler)	2017 - 2018	RR
XC	125	Vity (4P7)	2008 - 2013	FL
YBR	125	(3D92/9)	2007 - 2009	FL
YBR	125	(51D1/2)	2010 - 2016	FL
YBR	125	Custom	2008 - 2016	FL
YS	125		2017 - 2021	FL
T	135	HC/S (2S61) Crypton X/Jupiter MX/Spark 135/Exciter/135 LC/ Sniper	2006 - 2008	FL
T	135	SE (1S71)(Automatic Clutch) Crypton X/Jupiter MX/Spark 135/ Exciter/135 LC/Sniper	2006 - 2008	FL
GPD	150	A-N-MAX / 2DP4	2015 - 2018	RR

EQUIVALENTS OEM

1WD 25805 00	4S5 W0045 00	4C9 W0045 00	5D9 W0045 01	3C1 W0045 10	1S9 F530K 00	3C1 F5805 10
2MP W00 45 00						

PART NUMBER

265

AD | S3 | S33 RACING

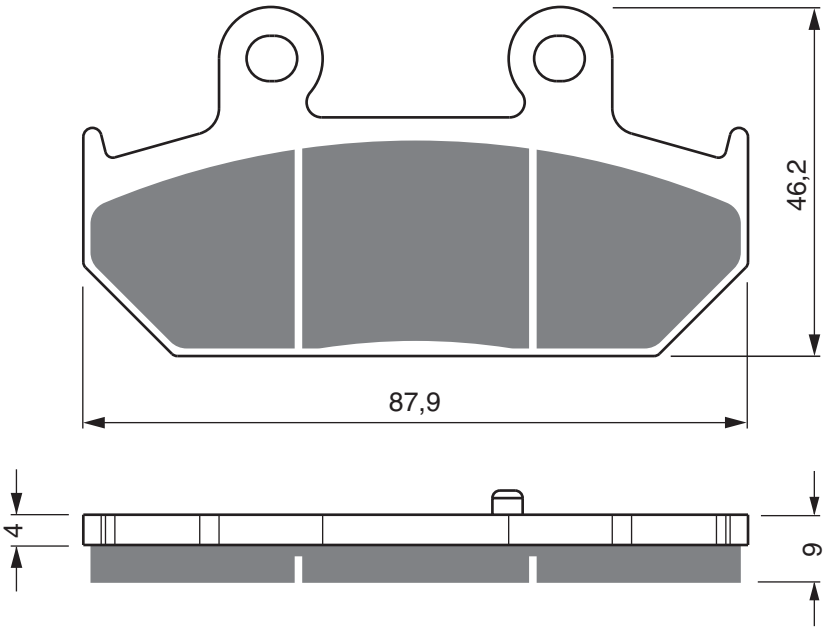

SUZUKI

AN	250	8 Skywave SS (CJ46A)	2008 - 2008	RR
AN	250	Skywave Type M (BA-CJ45SA)	2007 - 2008	RR
AN	250	Skywave Type S (BA-CJ44A)	2007 - 2008	RR
AN	400	AK9/ZAK9/AL0/ZAL0/AL1/ZAL1/AL2/AL3/AL4/ZAL4/AL5/ ZAL5/AL6/ZAL6/AL7/ZAL7/AL8/ZAL8/AL9/ZAL9 Skywave/ Burgman/ABS	2009 - 2020	RR
AN	400	K7/ZK7/K8/ZK8/K9/L0/L1/L2/L3/L4 Burgman/Non ABS/ Skywave	2007 - 2015	RR
AN	650	AK4/AK5/AK6/AK7/AK8/AZK8/AK9/AL0 Burgman / ABS	2004 - 2012	RR
AN	650	K3/K4/K5/K6/K7/K8/K9/L0 Burgman (Non ABS)	2004 - 2011	RR
AN	650	L3/L4/L5/L6 Burgman (Non ABS)	2013 - 2016	RR
AN	650	ZL3/ZL4/ZL5/ZL6/ZL7/ZL8 Burgman ABS Executive	2013 - 2018	RR

EQUIVALENTS OEM

69100 10840	69100 10860	69102 05890

AD | S3

PART NUMBER

266

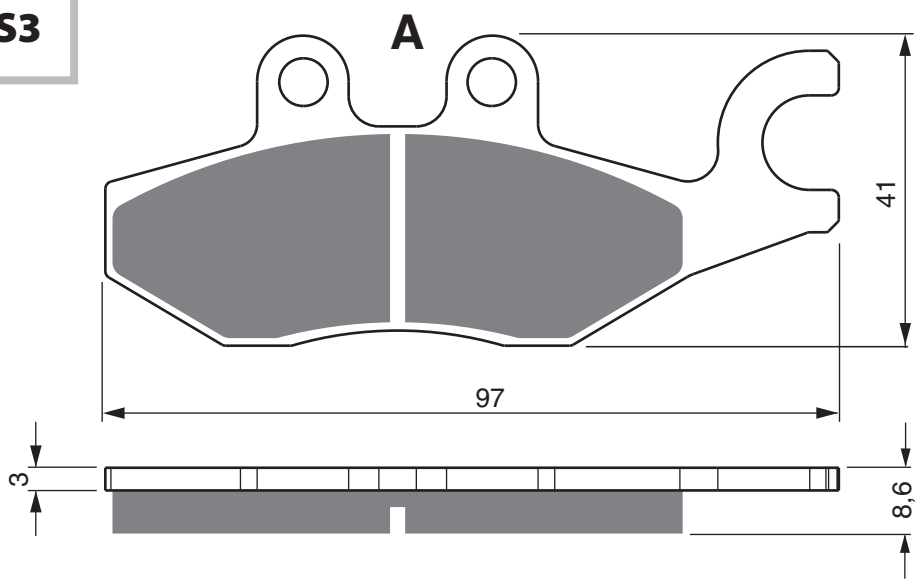

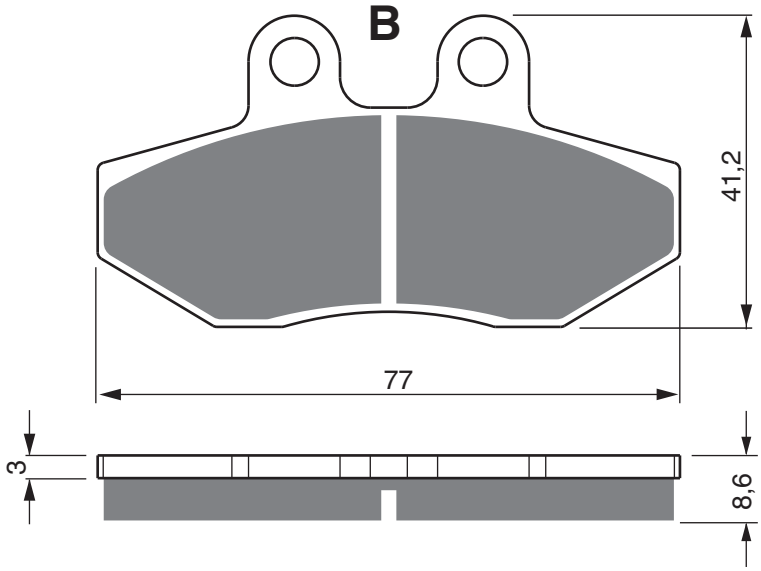

PIAGGIO VESPA

	125	Beverly (4T) (Multi spoke cast wheel)	2011 - 2014	RR	
	125	Beverly ie S	2014 - 2015	RR	
	125	Medley (ABS)	2016 - 2020	RR	
	125	Medley S (ABS)	2016 - 2020	RR	
	125	Xevo	2007 - 2016	RR	
MP3	125	Hybrid (14" rear wheel)	2009 - 2012	RR	
MP3	125	ie (EFi Models)	2008 - 2011	RR	
MP3	125	Yourban ie	2011 - 2012	RR	
X10	125	ie (4V/4T/EFI/All Models)	2012 - 2015	FR	RR
X7	125	cc	2008 - 2009	RR	
X7	125	Evo ie (EFI)	2009 - 2012	RR	
X9	125	Evolution	2005 - 2007	FR	
	150	Medley (ABS)	2016 - 2020	RR	
	150	Medley S (ABS)	2016 - 2020	RR	
	250	Xevo ie	2007 - 2010	RR	
MP3	250	LT (EFi) (14" Rear Wheel)	2009 - 2009	RR	
MP3	250	MIC/EFi (14" rear wheel)	2008 - 2009	RR	
X7	250	cc ie	2008 - 2009	RR	
X9	250		2005 - 2006	FR	
	300	Beverly (278cc/4T) (Multi spoke cast wheel)	2010 - 2015	RR	
	300	Beverly ie S	2014 - 2020	RR	
	300	Beverly Police ABS ASR (278cc)	2016 - 2018	RR	
	300	Beverly Sport Touring (330cc/4T) (5 Spoke cast wheel)	2011 - 2015	RR	
GTS	300	ie (ABS Models)	2008 - 2020	FL	
GTS	300	ie Super Sport (ABS Models)	2008 - 2018	FL	
GTS	300	ie Touring (ABS Models)	2011 - 2021	FL	
GTS	300	Super (ABS Models)	2008 - 2020	FL	
MP3	300	Business LT 300 ie ABS (13" Front Wheel/ 14" Rear Wheel)	2014 - 2018	RR	
MP3	300	Business LT ie	2013 - 2013	RR	
MP3	300	ie (Hybrid LT)	2011 - 2013	RR	
MP3	300	ie (Hybrid)	2011 - 2015	RR	
MP3	300	LT (EFi)	2010 - 2011	RR	
MP3	300	Sport LT 300 ie ABS (13" Front Wheel/ 14" Rear Wheel)	2014 - 2018	RR	
MP3	300	Sport LT ie	2013 - 2013	RR	
MP3	300	Touring ie	2011 - 2012	RR	
MP3	300	Touring LT ie	2011 - 2012	RR	
MP3	300	Yourban ie	2011 - 2012	RR	
MP3	300	Yourban LT ie	2011 - 2016	RR	
MP3	300	Yourban LT RL	2017 - 2018	RR	
MP3	300	Yourban Sport ie	2011 - 2016	RR	
X7	300	Evo	2009 - 2012	RR	
	350	Beverly ie Sport Touring (Non ABS/330 cc/4T)	2011 - 2015	RR	
	350	Beverly ie Sport Touring ABS (330 cc/4T)	2011 - 2015	RR	
	350	Beverly ie Sport Touring ABS (330cc/4T)	2016 - 2021	RR	
X10	350	ie (4V/4T/EFi)	2012 - 2015	FR	RR
X8	400	ie	2006 - 2008	FR	
MP3	500	EFi	2009 - 2010	RR	
X10	500	ie (4V/4T/EFi)	2012 - 2015	FR	RR

EQUIVALENTS OEM

497395	647079	665842	668021

PART NUMBER

267

AD | S3

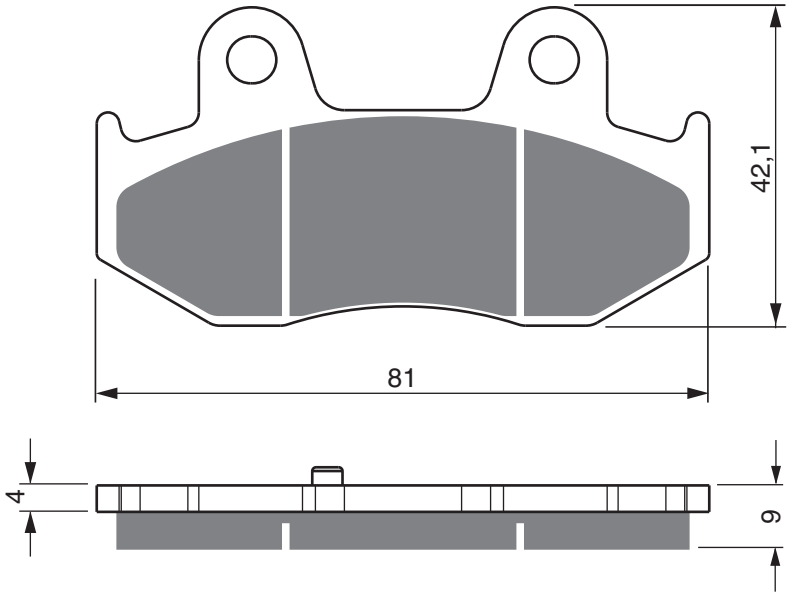

SUZUKI

AN	250	K1/K2 Burgman/Skywave	2001 - 2002	RR
AN	400	K1-K2 Burgman/Skywave	2001 - 2002	RR
AN	400	K3-K6 Burgman/Skywave	2003 - 2006	RR

EQUIVALENTS OEM

69100 14860	69100 14890

AD | S3 | S33 RACING

PART NUMBER

268

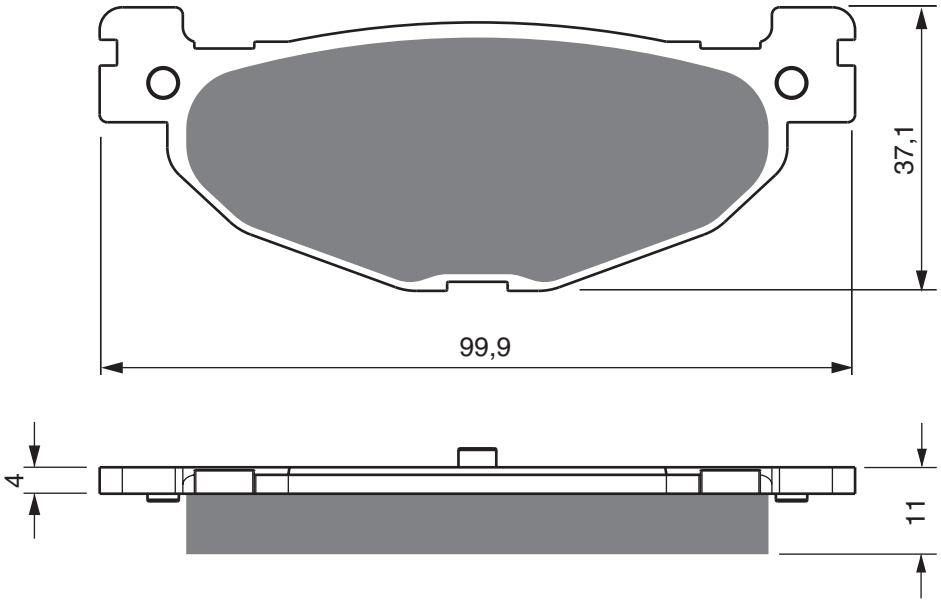

MBK

YP	400	Skyliner	2004 - 2004	RR

YAMAHA

CP	250	(1B71) Maxam / Morphus	2005 - 2006	RR
YP	400	Majesty (ABS)	2007 - 2013	RR
YP	400	Majesty (Non ABS)	2004 - 2013	RR
XP	500	S/T/V T-Max (5VU1/2)	2004 - 2007	RR
XP	500	T-Max (ABS Models)	2008 - 2011	RR
XP	500	T-Max (Non ABS Models)	2008 - 2011	RR

EQUIVALENTS OEM

5VU W0046 01	1B7 W0046 00	5RU W0046 00

PART NUMBER

269

AD	S3	S33 RACING	GP5	GP6

1 set = 4 pcs

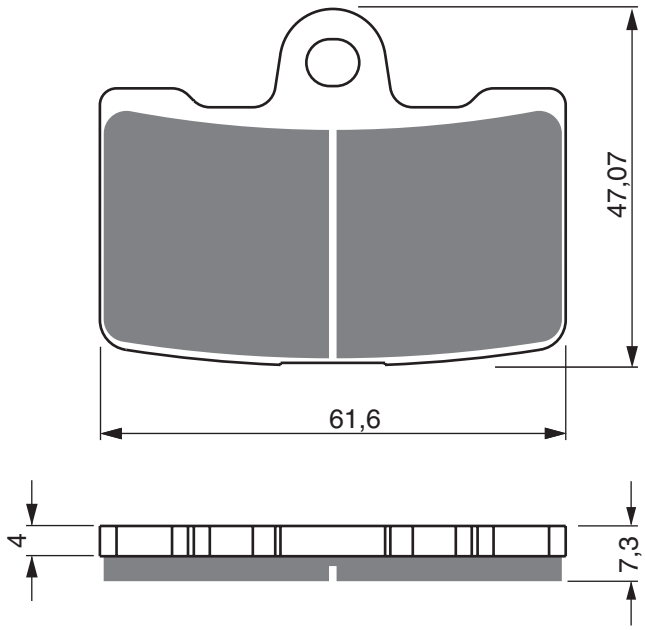

BUELL

	1 125	CR	2009 - 2010	FL
	1 125	R	2008 - 2010	FL
XB12R	1 200	Firebolt	2009 - 2010	FL
XB12SCG	1 200	Lightning	2009 - 2010	FL
XB12SS	1 200	Lightning Long	2009 - 2010	FL

EBR

	1 190	RS (Sport)	2014 - 2015	FR
	1 190	RX (Sport)	2014 - 2015	FL
	1 190	SX (Naked)	2014 - 2015	FL

EQUIVALENTS OEM

H0300 1AMA

AD | S3 | S33 RACING | GP5 | GP6 | GP7

PART NUMBER

270

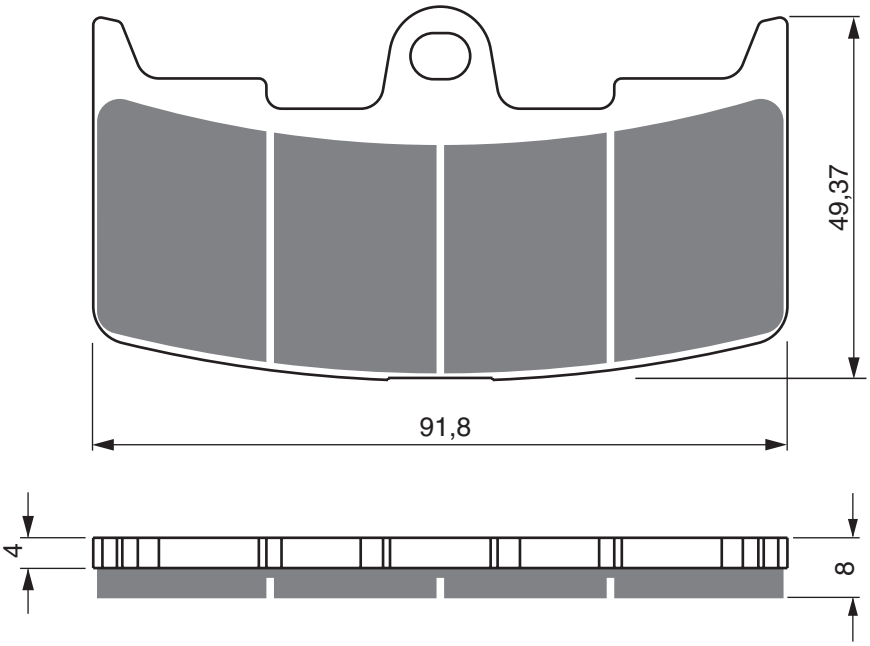

BUELL

XB9R	984	Firebolt	2002 - 2007	FL
XB9S	984	Lightning	2003 - 2004	FL
XB9SX	984	Lightning	2008 - 2010	FL
XB9SX	984	Lightning City X	2005 - 2009	FL
XB12R	1 200	Firebolt	2004 - 2008	FL
XB12S	1 200	Lightning	2004 - 2008	FL
XB12SCG	1 200	Lightning	2006 - 2008	FL
XB12SS	1 200	Lightning Long	2006 - 2008	FL
XB12STT	1 200	Lightning	2008 - 2008	FL
XB12STT	1 200	Super TT	2007 - 2010	FL
XB12X	1 200	Ulysses	2006 - 2010	FL
XT12XT	1 200	Ulysses	2008 - 2010	FL

EQUIVALENTS OEM

H0300-02A8

PART NUMBER

271

AD | S3 | S33 RACING

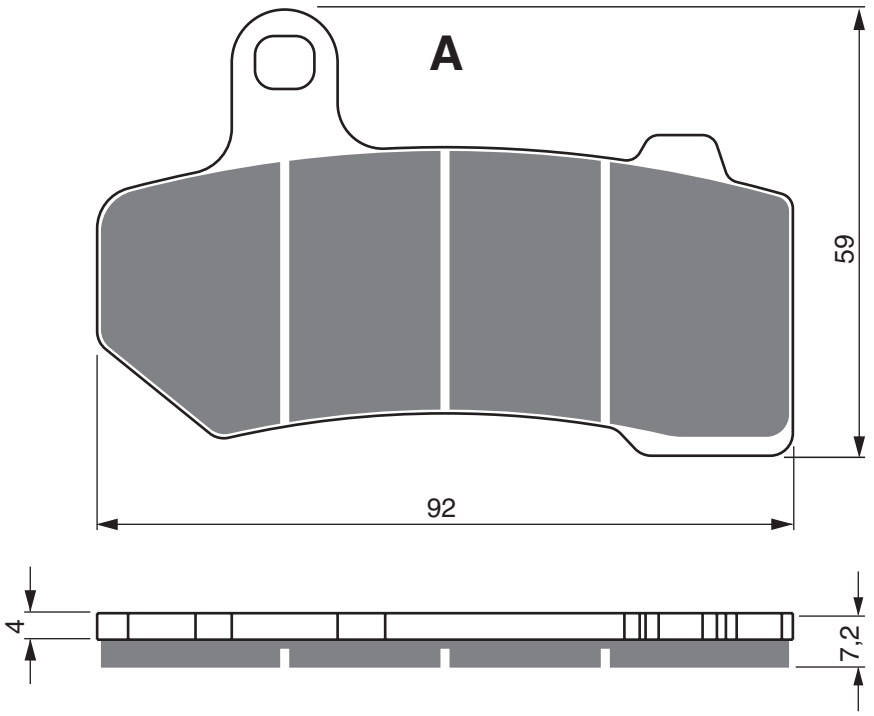

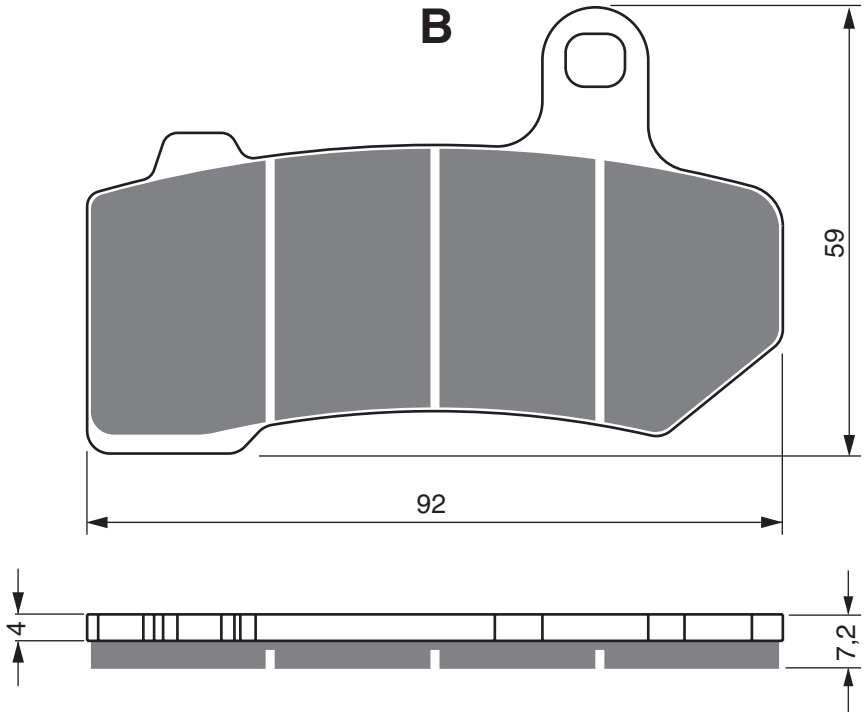

HARLEY DAVIDSON

FLHTK	Electra Glide Ultra LTD	2015	2020	FL	FR	RR
FLHTK	Electra Glide Ultra LTD Anniv	2018	2018	FL	FR	RR
FLHTK	Electra Glide Ultra LTD Shrine Edition	2018	2018	FL	FR	RR
FLHTKL	Ultra LTD Low	2015	2020	FL	FR	RR
FLTRX	Road Glide	2015	2020	FL	FR	RR
VRSCA	V-Rod (Brembo Caliper)	2006	2006	FL	FR	RR
VRSCAW	1 130 V-Rod	2007	2007	FL	FR	RR
VRSCD	1 130 Night Rod (Cast Wheel)	2006	2008	FL	FR	RR
VRSCR	1 130 Street Rod	2006	2007	FL	FR	RR
VRSCX	1 130 V-Rod	2007	2007	FL	FR	RR
VRSC	1 250 10th Anniversary V-Rod	2012	2012	FL	FR	RR
VRSCAW	1 250 V-Rod (Spoke Wheel)	2008	2010	FL	FR	RR
VRSCDX	1 250 Night Rod Special (Cast Wheel)	2007	2017	FL	FR	RR
VRSCF	1 250 V-Rod Muscle	2009	2017	FL	FR	RR

AD | S3 | S33 RACING

PART NUMBER

271

FLHTCUL	1 340	Electra Glide Ultra Classic LOW	2015	2015	FL	FR	RR
FLTRXS	1 340	Road Glide Special	2015	2017	FL	FR	RR
FLHR	1 584	Road King (Spoke Wheel Type)	2008	2016	FL	FR	RR
FLHRC	1 584	Road King Classic	2008	2020	FL	FR	RR
FLHT	1 584	Electra Glide Standard	2008	2010	FL	FR	RR
FLHTC	1 584	Electra Glide Classic	2008	2011	FL	FR	RR
FLHTCU	1 584	Ultra Electra Glide Classic	2008	2010	FL	FR	RR
FLHTK	1 584	Electra Glide Ultra LTD	2010	2013	FL	FR	RR
FLHX	1 584	Street Glide	2006	2007	RR		
FLHX	1 584	Street Glide	2008	2013	FL	FR	RR
FLTR	1 584	Road Glide	2008	2009	FL	FR	RR
FLTRU	1 584	Road Glide Ultra	2011	2012	FL	FR	RR
FLTRX	1 584	Road Glide Custom	2010	2012	FL	FR	RR

FLHR	1 690	Road King (Cast wheel type)	2015	2020	FL	FR	RR
FLHTCU	1 690	Ultra Classic Electra Glide	2011	2016	FL	FR	RR
FLHTCUTG	1 690	Tri Glide Ultra Classic Trike	2009	2013	FL	FR	
FLHX	1 690	Street Glide	2014	2020	FL	FR	RR
FLHXS	1 690	Street Glide Special	2017	2020	FL	FR	RR
FLHXXX	1 690	Street Glide Trike	2010	2011	FL	FR	
FLHRXS	1 750	Road King Special	2017	2020	FL	FR	RR
FLHTCU	1 750	Ultra Classic Electra Glide	2017	2020	FL	FR	RR
FLTRU	1 750	Road Glide Ultra	2016	2020	FL	FR	RR
FLTRXS	1 750	Road Glide Special	2018	2018	FL	FR	RR
FLHXSE	1 870	CVO Street Glide	2017	2017	FR	RR	

EQUIVALENTS OEM

41852-08	41854-08	42850-06A	42850-06B	42897-06A	42897-08

PART NUMBER

272

AD | S3 | S33 RACING

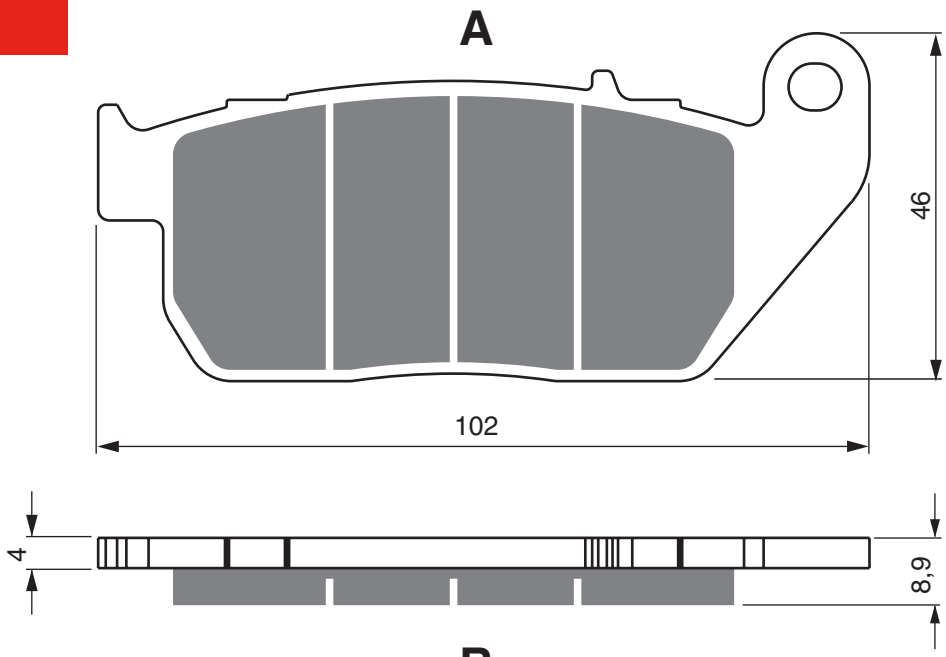

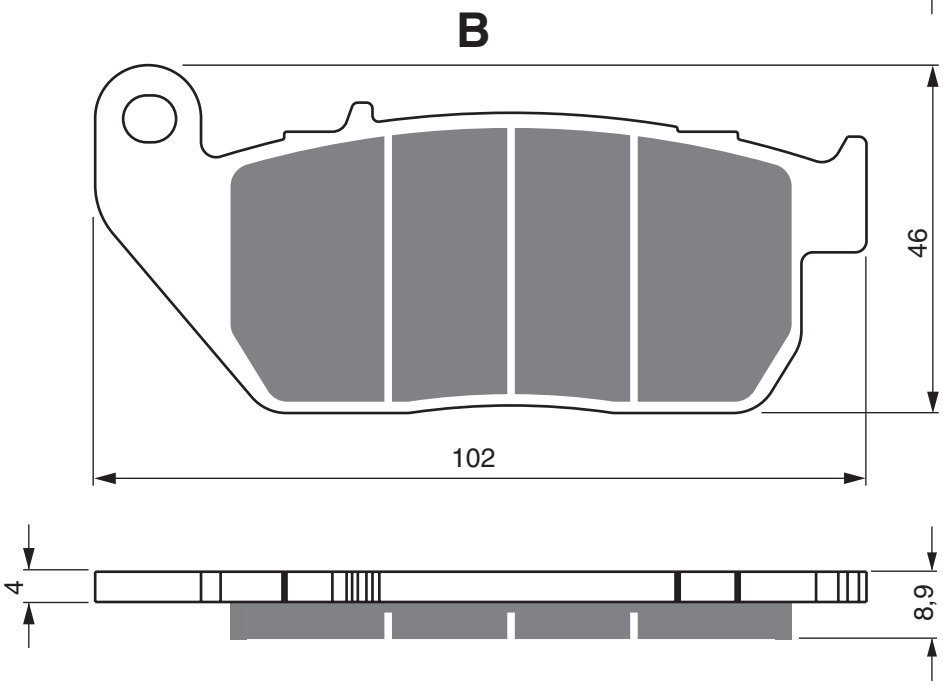

HARLEY DAVIDSON

XL		50th Anniversary Sportster	2007 - 2007	FL	FR
XL	883	C Sportster Custom	2004 - 2010	FL	FR
XL	883	L Low	2004 - 2010	FL	
XL	883	L Superlow	2011 - 2013	FL	
XL	883	N Iron	2009 - 2010	FL	FR
XL	883	R Roadster	2010 - 2013	FL	FR
XL	883	R Sportster R	2005 - 2013	FL	FR
XL	883	Sportster STD	2004 - 2008	FL	
XL	1 200	C Sportster Custom	2004 - 2013	FL	FR
XL	1 200	L Sportster Low (Cast Wheel)	2007 - 2011	FL	FR
XL	1 200	L Sportster Low (Spoke Wheel)	2007 - 2011	FL	FR
XL	1 200	N Nightster (Spoke Wheel)	2008 - 2012	FL	FR
XL	1 200	R Sportster Roadster	2004 - 2008	FL	FR
XL	1 200	V Seventy Two	2012 - 2013	FL	FR
XL	1 200	X Forty Eight	2010 - 2013	FL	FR

EQUIVALENTS OEM

42831-04

AD | S3 | S33 RACING

PART NUMBER

273

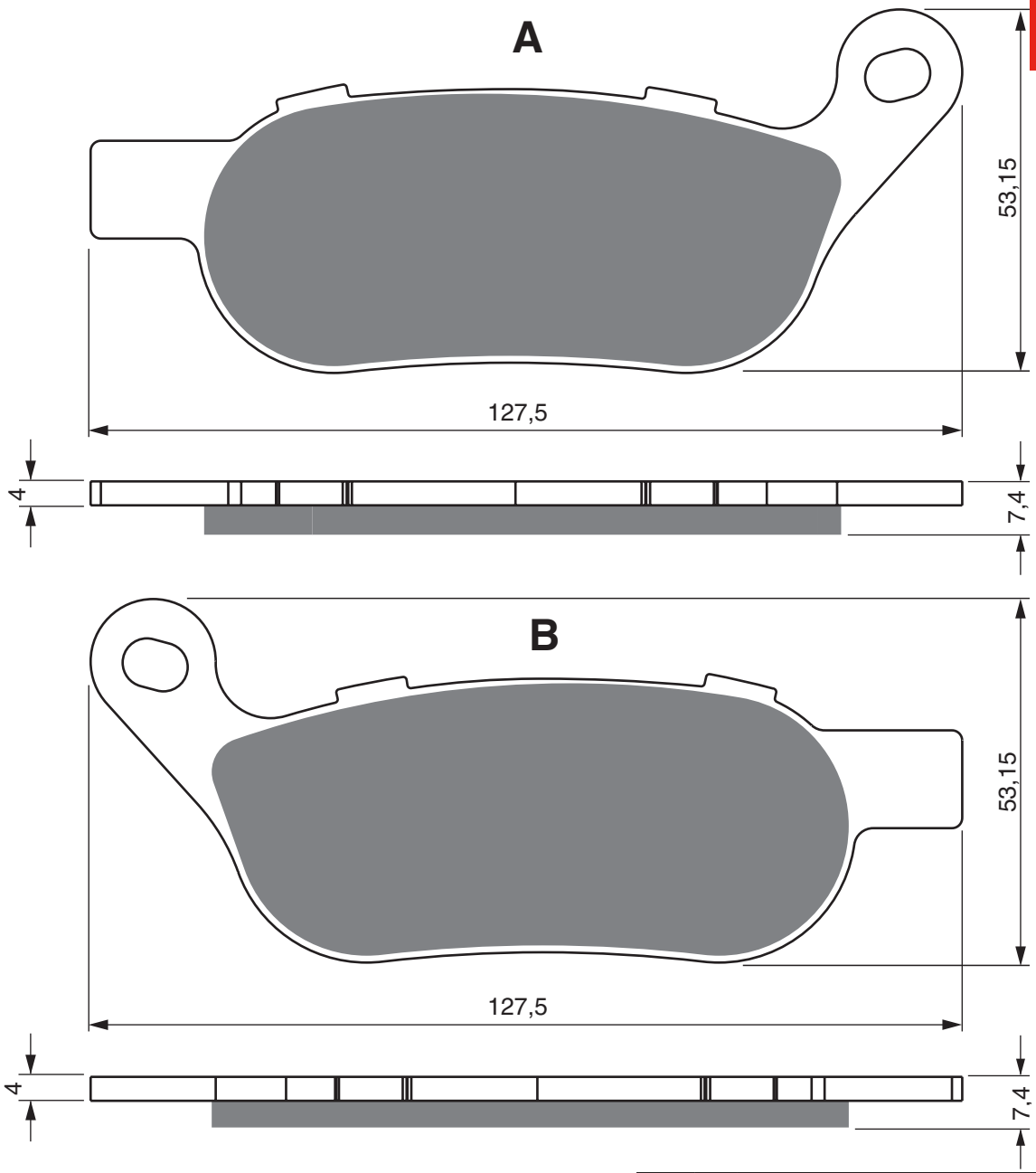

HARLEY DAVIDSON

FLSTC		Heritage Softail Classic	2015 - 2017	RR
FXDB		Dyna Street Bob (Spoke Wheel)	2008 - 2020	RR
FXDBC		Street Bob LTD	2016 - 2016	RR
FXDL		Low Rider (Cast Wheel)	2016 - 2014	RR
FXDL		Low Rider (Spoke Wheel)	2014 - 2017	RR
FXS		Softail Blackline	2011 - 2013	RR
FXSB		Breakout	2013 - 2014	RR
FXSB		Softail Breakout	2015 - 2017	RR
FXST		Softail Standard	2015 - 2015	RR
FLSTC	1 584	Heritage Softail Classic	2008 - 2014	RR
FLSTF	1 584	Fat Boy	2008 - 2011	RR
FLSTFB	1 584	Fat boy LO	2015 - 2017	RR
FLSTFB	1 584	Fat Boy LO Softail	2010 - 2014	RR
FLSTFB	1 584	Fat Boy Special	2010 - 2013	RR
FLSTN	1 584	Softail Deluxe	2008 - 2014	RR
FLSTSB	1 584	Softail Cross Bones	2008 - 2011	RR

EQUIVALENTS OEM

42298-08

FXCW	1 584	Rocker	2008 - 2009	RR
FXCWC	1 584	Rocker C	2008 - 2011	RR
FXD	1 584	Super Glide (Cast Wheel)	2008 - 2010	RR
FXDC	1 584	Super Glide Custom	2008 - 2014	RR
FXDF	1 584	Fat Bob (Cast Wheels)	2008 - 2017	RR
FXDL	1 584	Dyna Low Rider (Cast Wheel)	2008 - 2013	RR
FXDL	1 584	Low Rider (Spoke wheel)	2008 - 2009	RR
FXDWG	1 584	Dyna Wide Glide (Spoke wheels)	2008 - 2020	RR
FXST	1 584	Softail Standard	2008 - 2014	RR
FXSTB	1 584	Night Train (Spoke Wheel)	2008 - 2009	RR
FXSTC	1 584	Softail Custom (Spoke Wheel)	2008 - 2010	RR
FLD	1 690	Switchback	2012 - 2016	RR
FLS	1 690	Softail Slim	2012 - 2014	RR
FLS	1 690	Softail Slim	2015 - 2017	RR
FLSTF	1 690	Fat Boy	2012 - 2014	RR
FLSTF	1 690	Fat Boy	2015 - 2017	RR
FLSTN	1 690	Softail Deluxe	2015 - 2017	RR
FXDLS	1 690	Dyna Low Rider S	2017 - 2017	RR
FLSS	1 801	Softail Slim S	2016 - 2020	RR
FLSTFBS	1 801	Fat Boy S	2016 - 2018	RR

PART NUMBER

274

AD | S3 | S33 RACING

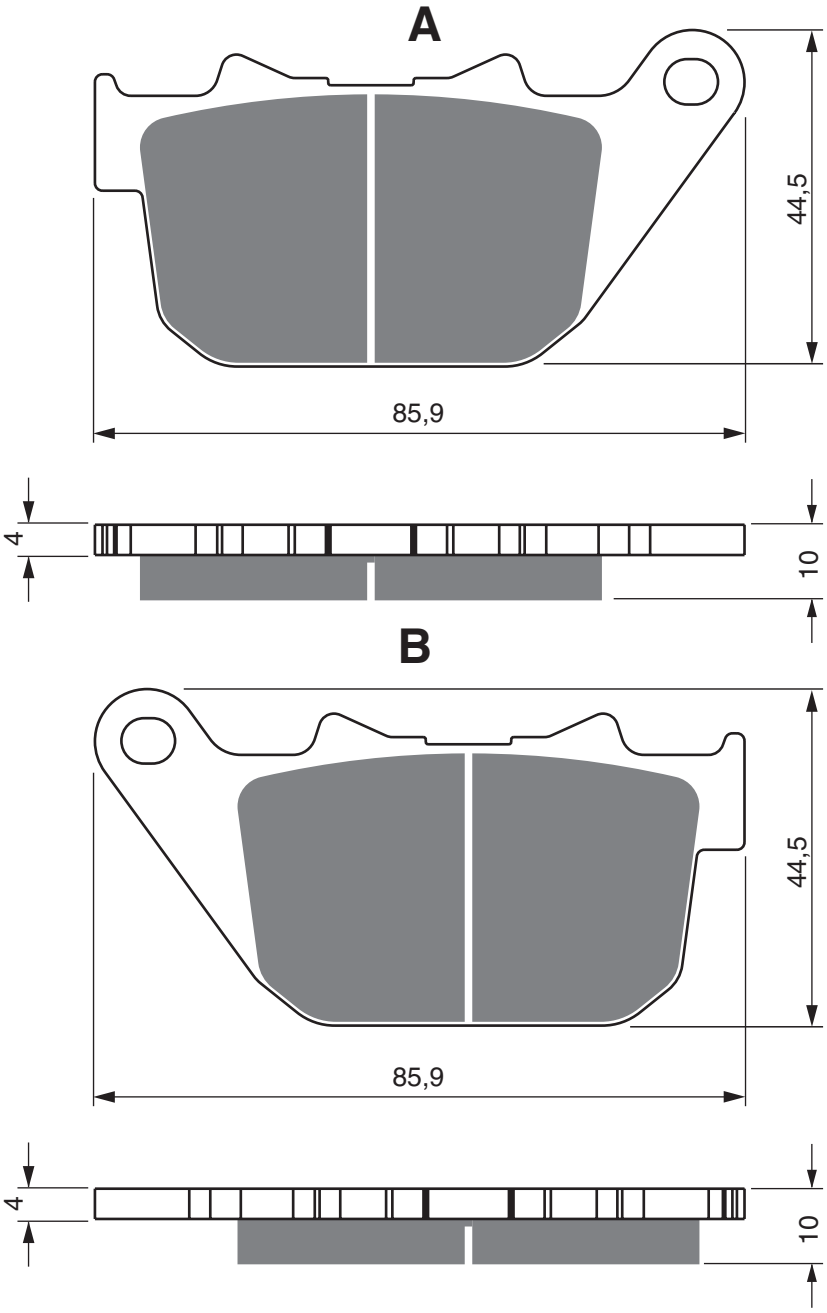

HARLEY DAVIDSON

XL		50th Anniversary Sportster	2007 - 2007	RR
XL	883	C Sportster Custom	2004 - 2010	RR
XL	883	L Low	2004 - 2010	RR
XL	883	L Superlow	2011 - 2013	RR
XL	883	N Iron	2009 - 2010	RR
XL	883	R Roadster	2010 - 2013	RR
XL	883	R Sportster R	2005 - 2013	RR
XL	883	Sportster STD	2004 - 2008	RR
XL	1 200	C Sportster Custom	2004 - 2013	RR
XL	1 200	L Sportster Low (Cast Wheel)	2007 - 2011	RR
XL	1 200	L Sportster Low (Spoke Wheel)	2007 - 2011	RR
XL	1 200	N Nightster (Spoke Wheel)	2008 - 2012	RR
XL	1 200	R Sportster Roadster	2004 - 2008	RR
XL	1 200	V Seventy Two	2012 - 2013	RR
XL	1 200	X Forty Eight	2010 - 2013	RR
XR	1 200		2008 - 2010	RR
XR	1 200	X	2010 - 2013	RR
FXDR	1 870	114	2018 - 2021	RR

EQUIVALENTS OEM

42836-04

AD	S3	S33 RACING

PART NUMBER

275

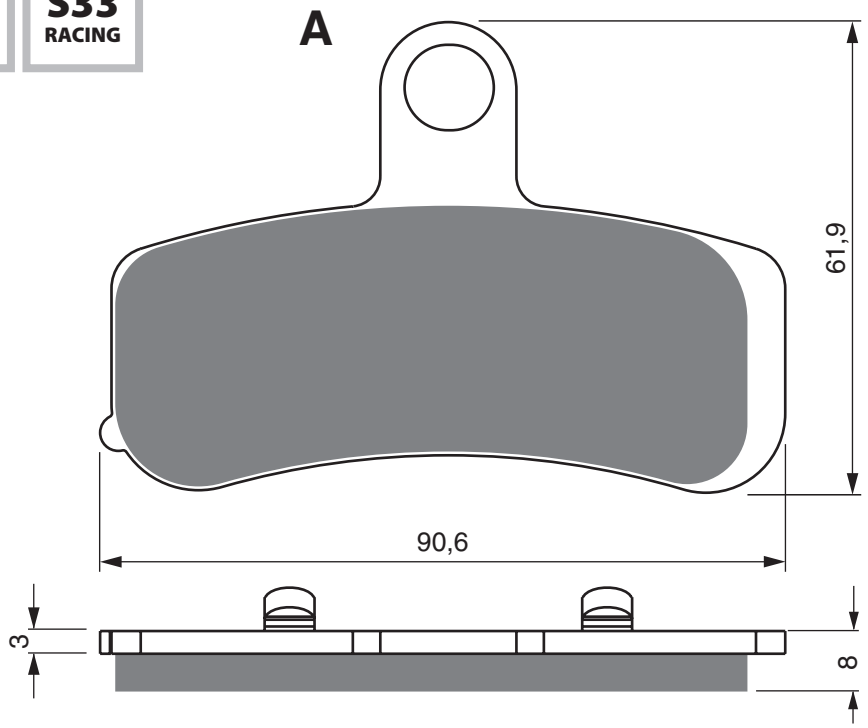

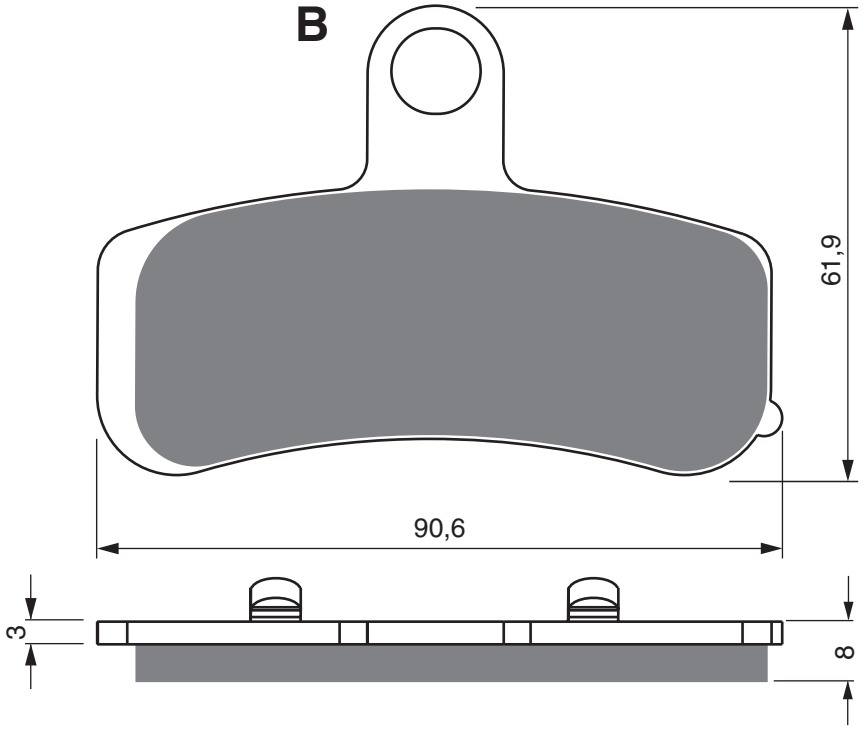

HARLEY DAVIDSON

FXDB		Dyna Street Bob (Spoke Wheel)	2008 - 2020	FL	FR
FXDBC		Street Bob LTD	2016 - 2016	FL	
FXDL		Low Rider (Cast Wheel)	2008 - 2014	FL	
FXDL		Low Rider (Spoke Wheel)	2014 - 2017	FL	FR
FXS		Softail Blackline	2011 - 2013	FL	
FXSB		Breakout	2013 - 2014	FL	
FLSTC	1 584	Heritage Softail Classic	2008 - 2014	FL	
FLSTF	1 584	Fat Boy	2008 - 2011	FL	
FLSTFB	1 584	Fat Boy LO Softail	2010 - 2014	FL	
FLSTFB	1 584	Fat Boy Special	2010 - 2013	FL	
FLSTN	1 584	Softail Deluxe	2008 - 2014	FL	
FXCW	1 584	Rocker	2008 - 2009	FL	
FXCWC	1 584	Rocker C	2008 - 2011	FL	
FXD	1 584	Super Glide (Cast Wheel)	2008 - 2010	FL	
FXDC	1 584	Super Glide Custom	2008 - 2014	FL	
FXDF	1 584	Fat Bob (Cast Wheels)	2008 - 2017	FL	FR
FXDL	1 584	Dyna Low Rider (Cast Wheel)	2008 - 2013	FL	
FXDL	1 584	Low Rider (Spoke wheel)	2008 - 2009	FL	
FXDWG	1 584	Dyna Wide Glide (Spoke wheels)	2008 - 2020	FL	
FXST	1 584	Softail Standard	2008 - 2014	FL	
FXSTB	1 584	Night Train (Spoke Wheel)	2008 - 2009	FL	
FXSTC	1 584	Softail Custom (Spoke Wheel)	2008 - 2010	FL	
FKHX	1 690	Street Glide	2011 -	FL	
FLD	1 690	Switchback	2012 - 2016	FL	
FLHTC	1 690	Electra Glide Classic	2011 - 2016	FL	
FLS	1 690	Softail Slim	2012 - 2014	FL	
FLSTF	1 690	Fat Boy	2012 - 2014	FL	
FXDLS	1 690	Dyna Low Rider S	2017 - 2017	FL	FR

EQUIVALENTS OEM

44082-08	46363-11

Disc Brake Pads

PART NUMBER

276

AD	S3	GP5	GP6	GP7	GPR

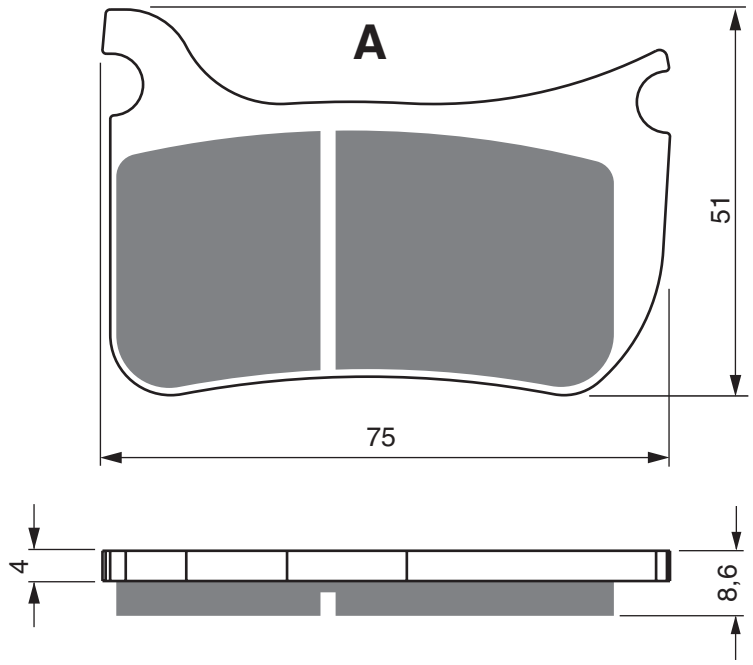

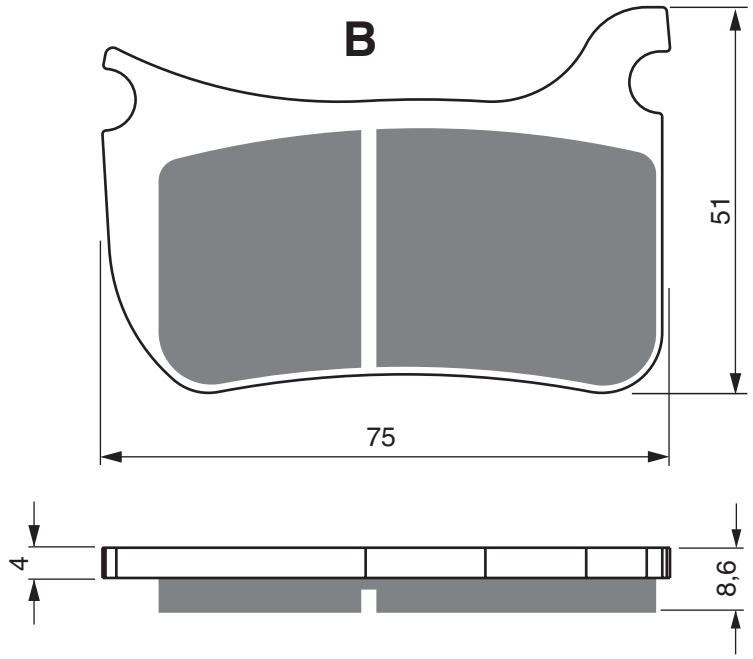

FOR BERINGER

R	4 Radial Piston Caliper	FL

AD | S3 | S33 RACING

PART NUMBER

277

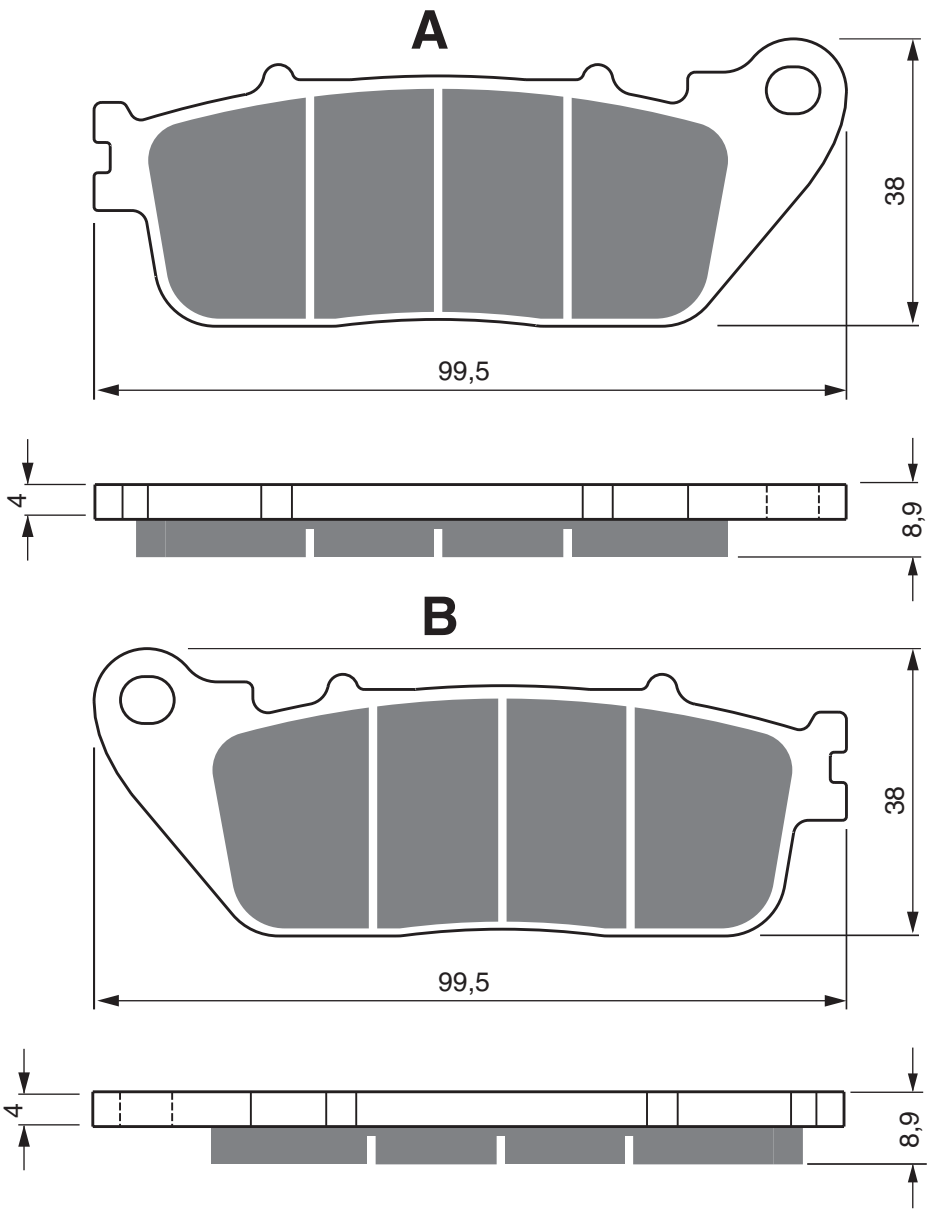

HONDA

VFR	800	F (ABS)	2014 - 2018	RR
VFR	800	XB/XC/XD (Crossrunner ABS)	2011 - 2013	RR
VFR	800	XF/XG (Crossrunner/ABS)	2015 - 2016	RR
VFR	800	XH/XJ (Crossrunner/ABS)	2017 - 2018	RR
CB	1 000	R (ABS Model)	2009 - 2016	RR
CB	1 000	R (Non ABS Model)	2009 - 2015	RR
CB	1 000	R	2017 - 2021	RR
VFR	1 200	FA	2010 - 2016	RR
VFR	1 200	FA GT	2014 - 2015	RR

EQUIVALENTS OEM

06435 MFN D01	06435 MFN D11	06435-MJM-D01	06435 MFN D12	06435 MFN D02	06435 MGY 641

PART NUMBER

278

AD	S3	GP5	GP6	GP7

A

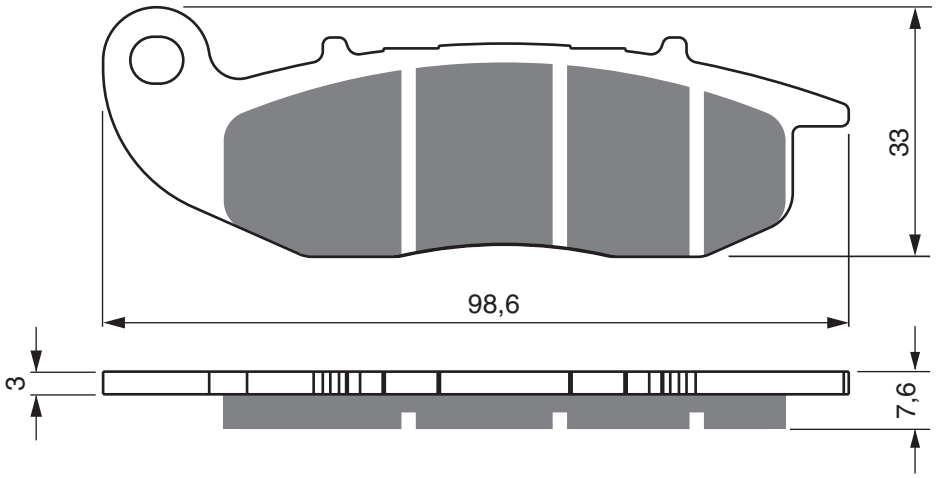

B

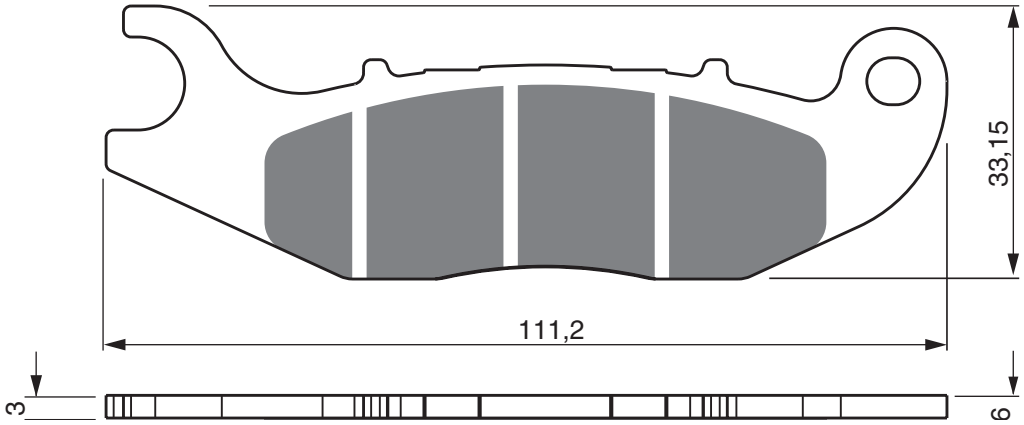

AJP

PR3	125	Enduro	2013 - 2015	FL
PR3	125	Enduro Pro	2013 - 2015	FL
PR3	125	Extreme	2013 - 2015	FL
PR3	125	Supermoto	2013 - 2015	FL
PR4	125	Enduro	2013 - 2015	FL
PR4	125	Enduro Pro	2013 - 2015	FL
PR4	125	Supermoto	2013 - 2015	FL
PR4	125	Trail	2013 - 2015	FL
PR3	240	MX Pro	2013 - 2015	FL
PR4	240	Extreme	2013 - 2015	FL
PR5	250	Enduro	2010 - 2015	FL
PR5	250	Extreme	2012 - 2015	FL
PR5	250	Supermoto	2010 - 2015	FL

DERBI

	125	Cross City	2009 - 2014	FL
	125	Mulhacen (4T) From Ref. No. 7N001791 (Spoke Wheel / Single Pad Fixing)	2007 - 2010	FL
	125	Terra Adventure	2007 - 2014	FL
	125	Terra Euro (Single Pin Pad Fixing)	2007 - 2011	FL

FANTIC

TR	125	CR (2T) Cross Competizione	2013 - 2013	FL
TZ	125	CS (2T) Caballero Cross	2011 - 2012	FL
TZ	125	ES (125 ES / 2T) Regolarita Scuderia	2011 - 2012	FL
TZ	170	E Regolarita (125 E / 4T)	2011 - 2015	FL
TZ	170	ER Caballero Regolarita Competizione (125 ER / 4T)	2011 - 2015	FL
TZ	170	SM Motard (125 SM / 4T)	2012 - 2015	FL
TX	180	E Regolarita (49cc/2T)	2011 - 2015	FL

AD | S3 | GP5 | GP6 | GP7

PART NUMBER

278

TX	180	ER Regolarita Copetizione (49cc/2T)	2012 - 2015	FL
TX	180	ES Regolarita Scuderia (49cc/2T)	2012 - 2015	FL
TX	180	SM Motard (49cc/2T)	2011 - 2015	FL
TX	180	SMR Motard Competizione (49cc/2T)	2012 - 2015	FL
TZ	200	ER Caballero Regolarita (200 ER / 4T)	2011 - 2015	FL
TZ	200	SMR Motard (200 SMR / 4T)	2011 - 2015	FL
TF	250	ES Regolarita (4T)	2011 - 2013	FL
TR	250	ES (2T) Enduro Six Days	2013 - 2013	FL
TR	300	ES (2T) Enduro Six Days	2013 - 2013	FL
TZ	300	ES Regolarita Scuderia	2011 - 2012	FL
GAS GAS				
EC	250	Cami F (4T)	2014 - 2015	FL
HM				
CRE	125	(Baja RR 2T)	2011 - 2011	FL
HONDA				
CRF	250	L (ABS)	2017 - 2021	FL
CRF	250	LD/LH	2013 - 2020	FL
CRF	250	ME Supermoto	2014 - 2016	FL
CRF	250	Rally (CRF 250 RL Rally Non ABS)	2017 - 2021	FL
CRF	250	Rally (CRF 250 RLA Rally ABS)	2017 - 2021	FL
CRF	300	L (ABS)	2020 - 2021	FL
CRF	300	Rally ABS	2020 - 2021	FL
MOTORHISPANIA				
	125	Duna Supermotard	2014 - 2014	FL
	125	Ranger Enduro	2013 - 2014	FL
RIEJU				
	50	Tango (2T)	2013 - 2015	FL
MTR	50	Pro Competizione (Spoke wheel)	2011 - 2014	FL
	125	Marathon Pro Competizione	2011 - 2014	FL
	125	Tango (4T)	2011 - 2020	FL
	250	Tango	2012 - 2015	FL
SCORPA				
	125	T-Ride F (Enduro)	2010 - 2010	FL
	250	T-Ride F (Enduro)	2008 - 2010	FL

EQUIVALENTS OEM

864342	865527	00TRS01A0074	06451 KZZ 901	00TRS 01 A0046	06431 MA3 405

PART NUMBER

279

AD | S3 | GP5 | GP6 | GP7

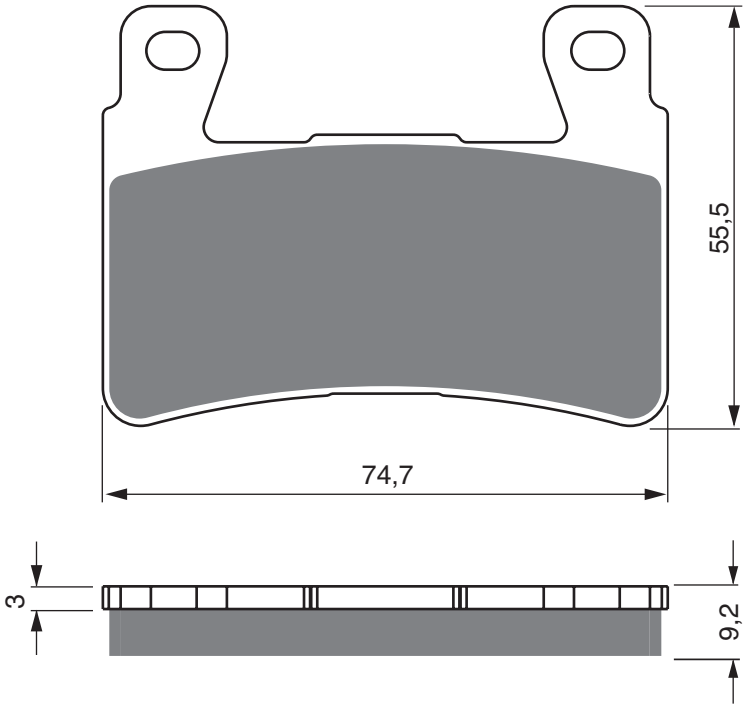

HARLEY DAVIDSON

FLFB		Fat Boy	2018 - 2018	FL	
FLFBS		Fat Boy 114	2018 - 2018	FL	
FLFBS		Fat Boy 114 Anniv	2018 - 2018	FL	
FLHCS		Heritage Classic 114 Anniv	2018 - 2018	FL	
FLSTC		Heritage Softail Classic	2015 - 2017	FL	
FXBR		Breakout	2018 - 2020	FR	
FXBRS		Breakout 114	2018 - 2020	FR	
FXBRS		Breakout Anniv 114	2018 - 2020	FR	
FXBS		Fat Bob	2018 - 2020	FL	
FXSB		Softail Breakout	2015 - 2017	FL	
FXST		Softail Standard	2015 - 2015	FL	
XR	1 200		2008 - 2010	FL	FR
XR	1 200	X	2010 - 2013	FL	FR
FLSTFB	1 584	Fat boy LO	2015 - 2017	FL	
FLS	1 690	Softail Slim	2015 - 2017	FL	
FLSTF	1 690	Fat Boy	2015 - 2017	FL	
FLSTN	1 690	Softail Deluxe	2015 - 2017	FL	
FLDE	1 750	Softail Deluxe	2018 - 2020	FL	
FLFB	1 750	Fat Boy	2018 - 2020	FL	
FLHC	1 750	Heritage Classic	2018 - 2018	FL	
FLSB	1 750	Sport Glide	2018 - 2020	FL	
FLSL	1 750	Softail Slim	2018 - 2018	FL	
FXBB	1 750	Street Bob	2018 - 2020	FL	
FXBR	1 750	Breakout	2018 - 2020	FL	
FXFB	1 750	Fat Bob	2018 - 2020	FL	FR
FXLR	1 750	Low Rider	2018 - 2020	FL	FR
FLSS	1 801	Softail Slim S	2016 - 2020	FR	
FLSTFBS	1 801	Fat Boy S	2016 - 2018	FR	
FLHCS	1 870	Heritage Classic 114	2018 - 2018	FL	
FLHSC	1 870	Heritage Classic	2018 - 2018	FL	
FXBRS	1 870	Breakout 114	2018 - 2020	FL	

HONDA

CB	400	SF4/5/S5 (NC39 - Superfour/Superfour Bol D'Or)	2004 - 2005	FL	FR
CB	400	SFX/SFY/SF1/SF2/SF3 Superfour (NC39 - Superfour/ Superfour Bol D'Or)	1999 - 2003	FL	FR
CBR	600	F1/F2	2001 - 2002	FL	FR
CBR	600	F3/F4/F5/F6	2003 - 2006	FL	FR
CBR	600	FS1/FS2 "Sport"	2001 - 2002	FL	FR
CBR	600	FX/FY	1999 - 2000	FL	FR
CBR	600	RR3/RR4	2003 - 2004	FL	FR
CB	1 100	AE (Cast Wheels / 4 piston Caliper)	2014 - 2014	FL	FR
CB	1 100	EX (SAE)	2014 - 2021	FL	FR
CB	1 300	5/6/7/8/9 (Superfour)	2005 - 2009	FL	FR
CB	1 300	A5/A6/A7/A8/A9 (Superfour ABS)	2005 - 2009	FL	FR
CB	1 300	F3/F13	2003 - 2004	FL	FR
CB	1 300	S5/S6/S7/S8/S9	2005 - 2009	FL	FR
CB	1 300	SA5/SA6/SA7/SA8/SAA	2005 - 2010	FL	FR
F6C	1 800	Goldwing (4 Piston Caliper) (GLF6CAE)	2014 - 2017	FL	FR

EQUIVALENTS OEM

06455 MBW 006	06455 MBW E11	42739 008	59330 H99 700	43082 0131	41300102

AD	K1	K5	K5-LX	S3	S33 RACING

PART NUMBER

280

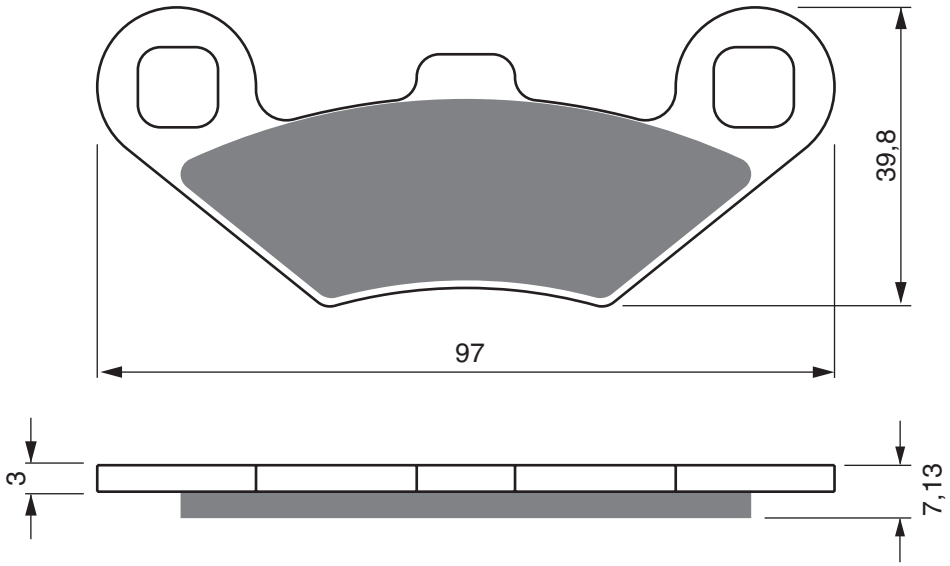

PEUGEOT

400	Metropolis Blue Line (3 Wheel Model)	2015 - 2016	FL	FR	RR
400	Metropolis T (3 Wheel Model)	2014 - 2016	FL	FR	RR
400	Metropolis T-RS (3 Wheel Model)	2014 - 2016	FL	FR	RR

EQUIVALENTS OEM

1910036	1910042	1910129	1910333	1930643	1930731	1930815
2200465	2200901	2201398	2202412	2203452	2203792	2201149
1911171						

PART NUMBER

281

AD	K1	K5	S3	S33 RACING

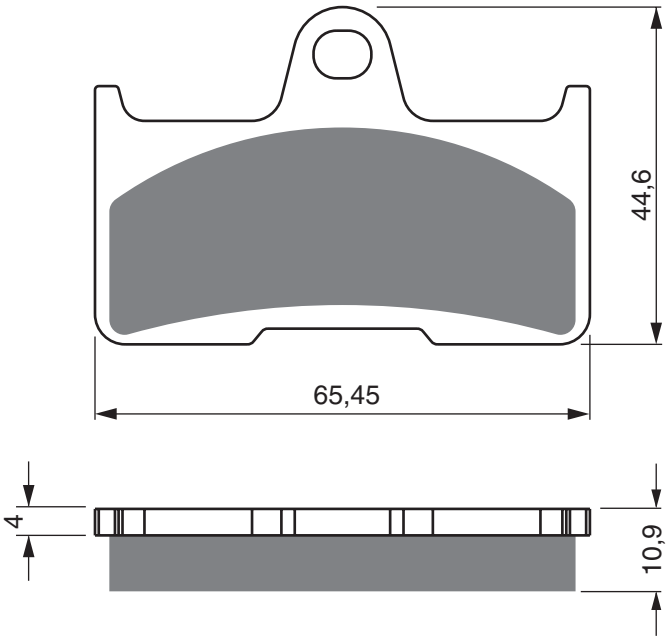

CCM

LX	700	- 4 A Quad	2008 - 2009	RR

CF MOTO

CF	500	-5 (Rancher UTV)	2011 - 2014	RR
CF	500	5B/5C - C/Force Classic	2014 - 2015	RR
CF	500	C/Force (X5 Terralander)	2011 - 2015	RR
CF	625	C/Force (X6 Terralander)	2011 - 2015	RR
CF	800	-2 - C/Force (ATV)	2014 - 2015	RR

EXPLORER

	500	Atlas 4x4	2008 - 2009	RR
	500	L Everest 4x4	2008 - 2009	RR

GOES

G		E-SSV Electric (Side x Side)	2012 - 2013	RR
	520	Max (Quad)	2007 - 2014	RR
G	520	F (Quad)	2007 - 2014	RR
G	520	UTX (Side x Side)	2010 - 2011	RR
G	525	(4x4)	2012 - 2013	RR
G	525	Max (4x4)	2012 - 2013	RR
G	625	i (4x4)	2012 - 2014	RR
G	625	i (4x4) Max	2012 - 2014	RR
G	625	i (All models)	2012 - 2012	RR
G	625	i UTX (4x4) (Side x Side)	2012 - 2014	RR

JOURNEYMAN

RX	510	Gladiator	2008 - 2008	RR

QUADZILLA

RS5		4 WD	2010 - 2011	RR
RS6		EFi 4WD	2010 - 2011	RR
X8		4x4/EFi	2012 - 2015	RR
Z6		4x4	2010 - 2013	RR
CUV	500	Side x Side	2010 - 2011	RR
QZ	500	E/ES 4x4	2010 - 2011	RR
RL	500	MK II Buggie	2010 - 2011	RR

WT MOTORS

WT	500	Alaska Quad	2008 - 2009	RR

YAMAHA

YFM	660	FR/FS/FT Grizzly	2003 - 2005	RR
YFM	660	FWAP/FWAR/FWAS/FWAT/FWAW/FGW/FGX Grizzly	2002 - 2008	RR

EQUIVALENTS OEM

5KM W0046 00	901 08 05 01	901 08 05 10	30100805A0	90100805BO	90100850510

AD	K1	K5	S3	S33 RACING

PART NUMBER

282

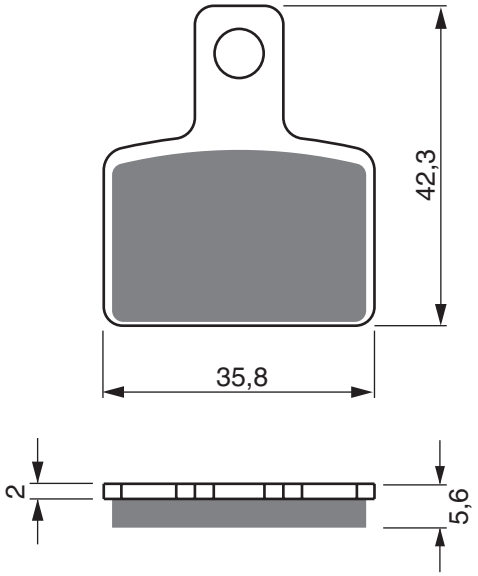

BETA

	125	Trial Evo (2T) MY20	2020 - 2020	RR
EVO	125	(2T)	2009 - 2015	RR
	200	Trial Evo (2T) MY20	2020 - 2020	RR
EVO	200	(2T)	2009 - 2020	RR
	250	Trial Evo (2T) MY20 Inc GB	2020 - 2020	RR
EVO	250	(2T)	2009 - 2020	RR
EVO	250	(4T)	2009 - 2020	RR
EVO	250	Factory	2009 - 2020	RR
	300	Trial Evo (2T) MY20 Inc GB and SS	2020 - 2020	RR
EVO	300	(2T)	2009 - 2020	RR
EVO	300	(4T)	2009 - 2020	RR

EQUIVALENTS OEM

00736071800

PART NUMBER

283

AD	K1	K5	S3	S33 RACING

A

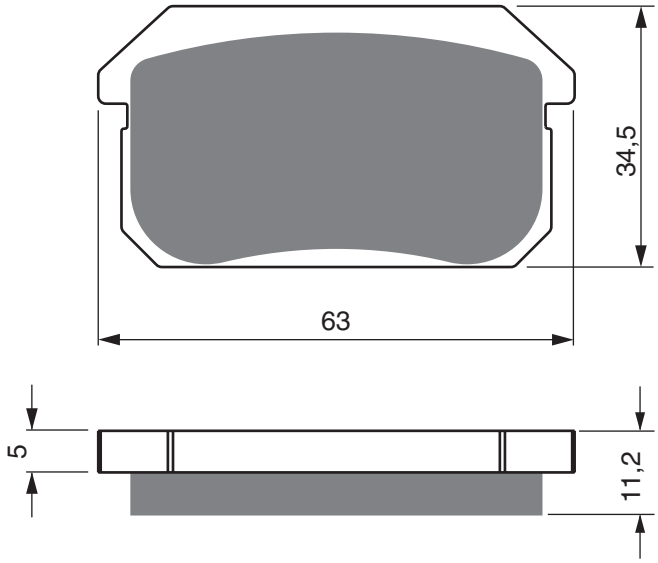

B

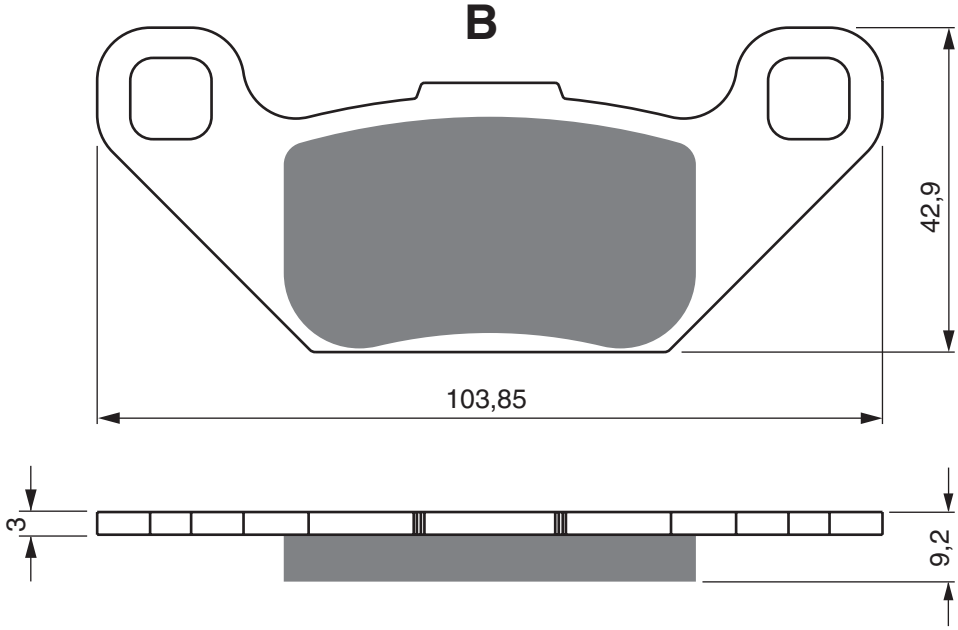

ADLY

	220	Crossroad Sentinal Quad		RR
	280	Canyon Quad	2008 - 2009	RR
	280	Huricane Quad	2008 - 2009	RR
	300	Canyon Quad	2008 - 2009	RR
	300	Crossroad Sentinal Quad	2008 - 2009	RR
	300	Huricane Quad	2008 - 2009	RR
	300	Interceptor Quad	2008 - 2008	RR
	300	Utility	2005 - 2007	RR
RS	300	Quad	2007 - 2008	RR
XS	300	Quad	2007 - 2008	RR
	320	Huricane Quad	2008 - 2009	RR
	320	S Quad	2008 - 2008	RR
	500	S Quad	2008 - 2008	RR

CPI

XS	250	Quad	2006 - 2009	RR

EXPLORER

	300	Ranger 2x4/4x4	2008 - 2009	RR

HAMMERHEAD BUGGIES

ES	150	S Supersport 11 R	2008 - 2009	RR

PGO

BR	200	Bugrider	2007 - 2012	RR
	250	Bug		RR
BR	250	E Bugrider	2005 - 2012	RR

QUADZILLA

CVT	150	E	2010 - 2011	RR
XRV	250	(Off road)	2006 - 2007	RR
XRV	250	E	2006 - 2007	RR
QZ	300	E 4x4		PB
RL	300	Buggie	2007 - 2008	RR
	320	E 4x4	2007 - 2008	RR
CVT	320	E	2007 - 2011	RR
QZ	320	E 4x4	2009 - 2009	PB

EQUIVALENTS OEM

7-020-022	43120 256 000	32176F	32176G	B74074-100000

AD	K1	K5	K5-LX	S3	S33 RACING

PART NUMBER

284

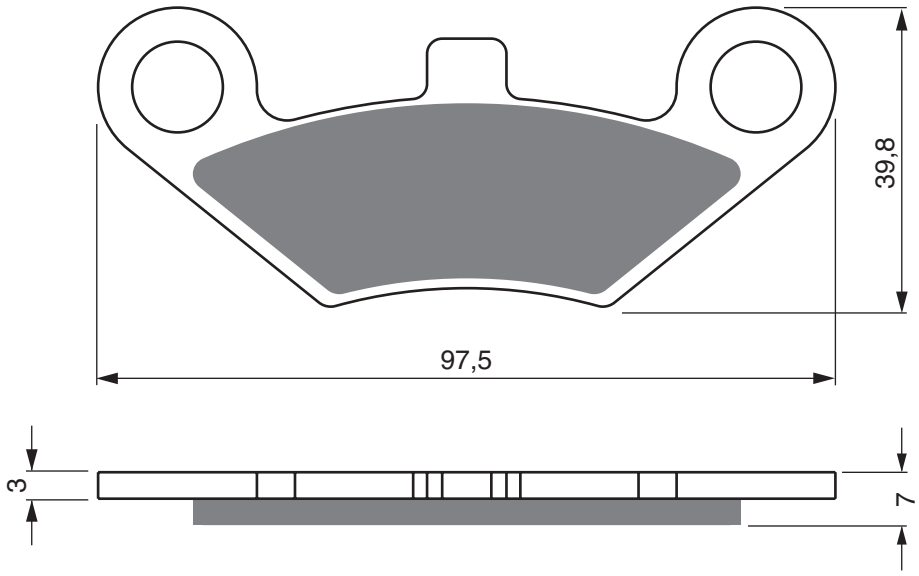

AJS						
	50	Crazy Naked	2013 - 2014	RR		
CF MOTO						
CF	500	5B/5C - C/Force Classic	2014 - 2015	FL	FR	
CF	500	AU-6L - C Force 550 (ATV)	2015 - 2015	FL	FR	
CF	500	C/Force (X5 Terralander)	2011 - 2015	FL	FR	
CF	625	C/Force (X6 Terralander)	2011 - 2015	FL	FR	
CF	800	-2 - C/Force (ATV)	2014 - 2015	FL	FR	
EXPLORER						
	500	Atlas 4x4	2008 - 2009	FL	FR	
	500	L Everest 4x4	2008 - 2009	FL	FR	
GOES						
G		E-SSV Electric (Side x Side)	2012 - 2013	FL	FR	
	220	UTS (Side x Side)	2013 - 2014	FL	FR	
	360	Max (Quad)	2008 - 2014	FL	FR	
	520	Max (Quad)	2007 - 2014	FL	FR	
G	520	F (Quad)	2007 - 2014	FL	FR	
G	525	(4x4)	2012 - 2013	FL	FR	
G	525	Max (4x4)	2012 - 2013	FL	FR	
G	625	i (4x4)	2012 - 2014	FL	FR	
G	625	i (4x4) Max	2012 - 2014	FL	FR	
G	625	i (All models)	2012 - 2012	FL	FR	
G	625	i UTX (4x4) (Side x Side)	2012 - 2014	FL	FR	
JOURNEYMAN						
RX	510	Gladiator	2008 - 2008	FL	FR	
LINHAI						
CUV		Jobber (4x4)	2013 - 2013	RR		
	260	Goon (2x4/4x4)	2007 - 2009	FL	FR	RR
	300	Muddy (4x4)	2007 - 2009	FL	FR	RR
CUV	300	Carry	2007 - 2009	FL	FR	RR
ATV	310	(4x2)	2013 - 2013	FL	FR	RR
ATV	320	(4x4) Carrier	2013 - 2013	FL	FR	RR
ATV	420	(4x2) LOF	2013 - 2013	FL	FR	RR
ATV	420	(4x4) Carrier/LOF	2013 - 2013	FL	FR	RR
ATV	420	(4x4) LOF	2013 - 2013	FL	FR	RR
ATV	600	EFI (4x4) LOF	2013 - 2013	RR		
NEW FORCE QUADS						
		Most Models (Check shape of old pad)		FL	FR	RR
PEUGEOT						
	400	Metropolis RS (3 Wheel Model)	2014 - 2014	FL	FR	RR
QUADZILLA						
RS5		4 WD	2010 - 2011	FL	FR	
RS6		EFi 4WD	2010 - 2011	FL	FR	
X8		4x4/EFi	2012 - 2015	FL	FR	
Z6		4x4	2010 - 2013	FL	FR	
CVT	150	E	2010 - 2011	FL	FR	
	300	E 4x4 (Auto)	2006 - 2006	FL	FR	
	300	Quadzilla Utility	2004 - 2006	FL	FR	
CUV	300	(4x4 Super Utility Side x Side)	2008 - 2008	RR		
SUV	300	E (Auto)	2006 - 2006	FL	FR	
SUV	300	E (Manual)	2006 - 2007	FL	FR	
	320	E 4x4	2007 - 2008	FL	FR	
CVT	320	E	2007 - 2011	FL	FR	
	500	4x4	2009 - 2011	FL	FR	
CUV	500	Side x Side	2010 - 2011	FL	FR	
QZ	500	E/ES 4x4	2010 - 2011	FL	FR	
RL	500	MK II Buggie	2010 - 2011	FL	FR	
RS	500	5 4WD	2010 - 2011	FL	FR	
WT MOTORS						
WT	500	Alaska Quad	2008 - 2009	FL	FR	

EQUIVALENTS OEM

901 08 08 01	901 08 08 10	45815 RAM 01	322050A	3220505A	9010-0808BO

PART NUMBER

285

AD | S3

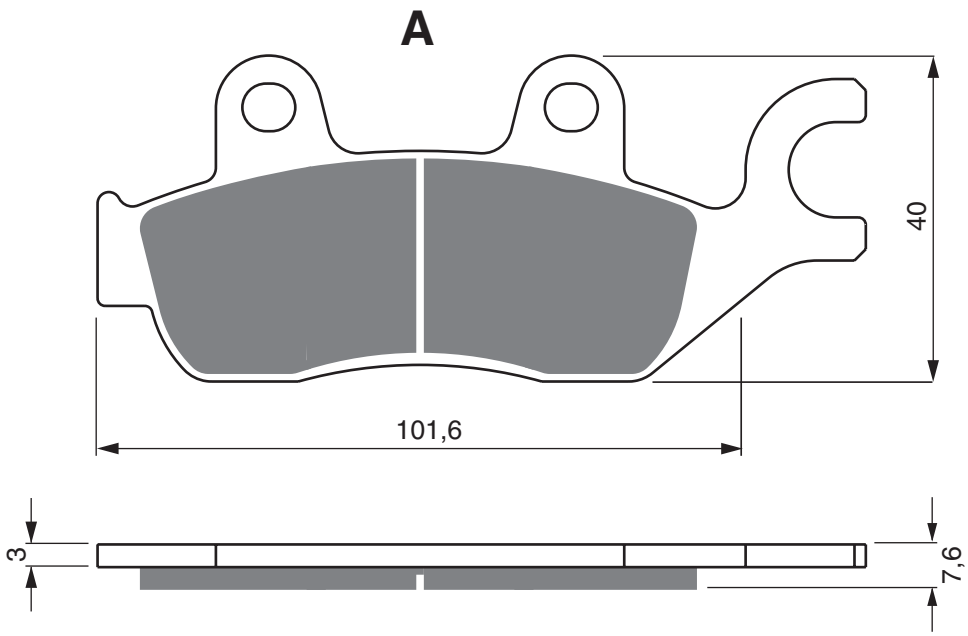

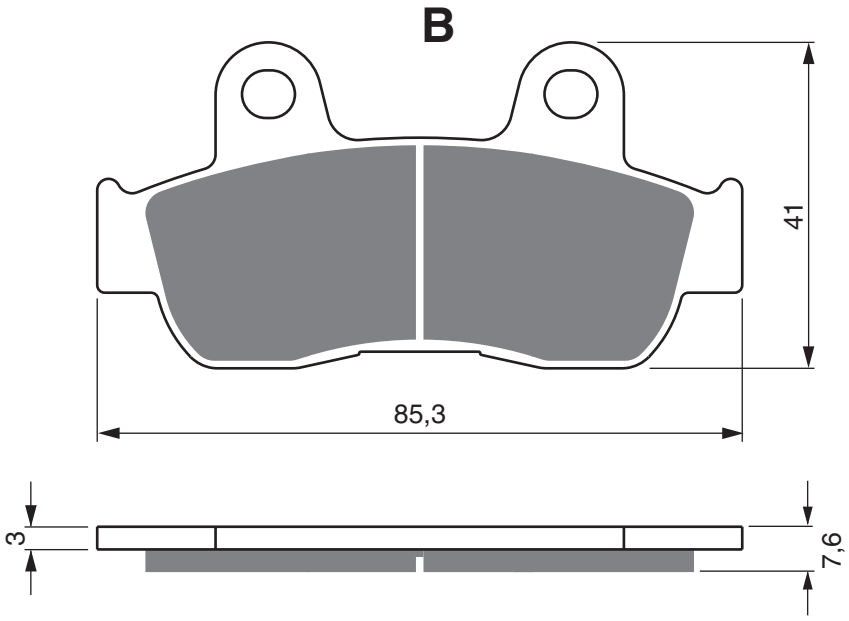

HONDA

CBX	250	Twister	2004 - 2004	FL	

AD	K5	S3

PART NUMBER

286

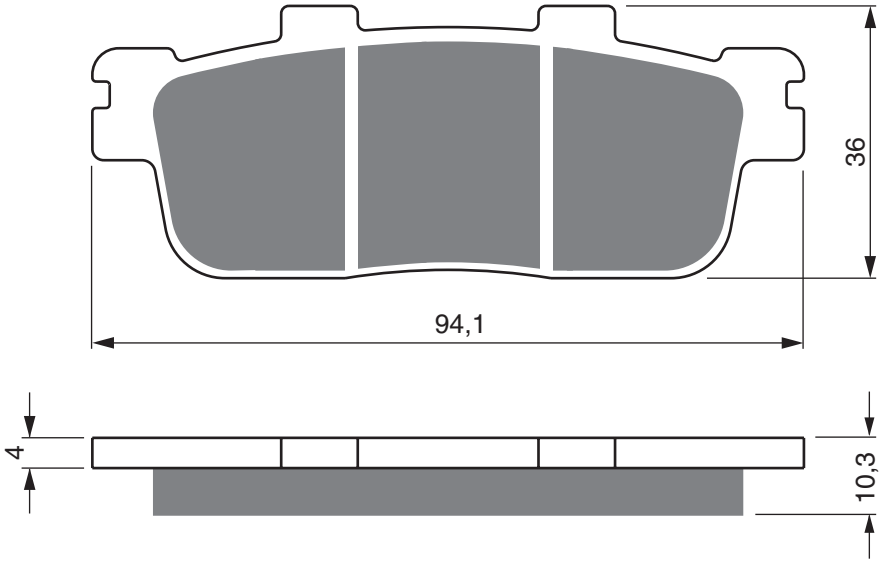

ADIVA SCOOTERS

AD2	300	(2 Wheel Type)	2014 - 2015	RR
AD3	300	(3 Wheel Type)	2014 - 2015	RR

DAELIM

S3	125	(SV125)	2012 - 2014	RR
ET	250	Quad	2005 - 2008	RR
S3	250	(SV 250)	2012 - 2014	RR
ST	250	Sector Quad	2005 - 2006	RR
ET	300	Quad	2007 - 2009	RR

E-TON

RXL	150	Viper	2007 - 2007	RR
VXL	250	ST Vector	2006 - 2007	RR
VXL	250	Vector	2006 - 2007	RR
VTX	300	ST Vortex ST	2007 - 2007	RR
VTX	300	Vortex	2007 - 2007	RR
VXL	300	ST Vector ST	2007 - 2007	RR
VXL	300	Vector	2007 - 2007	RR

HP POWER

	260	Barum (4T/2V/LC)	2010 - 2011	RR

KYMCO

	125	People S DD	2007 - 2011	RR
	200	People i S DD	2007 - 2011	RR

PEUGEOT

LXR	125	(4T)	2010 - 2013	RR
LXR	200	i (4T)	2010 - 2012	RR

SYM

	125	City Com	2008 - 2013	RR
	125	Joyride EVO i (Twin Headlamps)	2009 - 2020	RR
	125	Joyride i	2007 - 2009	RR
GTS	125	i Joymax (All models)	2010 - 2015	RR
GTS	125	i Sport (All models)	2014 - 2015	RR
GTS	125	Joymax/Voyager	2006 - 2009	FL
GTS	125	Joymax/Voyager	2006 - 2009	RR
HD	125	Evo (Carb & EFi Models / 4T / Single Headlamp)	2003 - 2013	RR
SB	125	Ni-Wolf (EFi Model)	2011 - 2015	FL
	200	Joyride EVO i	2009 - 2020	RR
	200	Joyride i	2007 - 2009	RR
	200	Quadlander	2012 - 2013	RR
	200	Trackrunner Quad	2005 - 2009	RR
H	200	SE	2006 - 2006	RR
HD	200	Evo (Carb & EFi Models / 4T / Single Headlamp)	2003 - 2013	RR
HD	200	S Evo	2007 - 2007	RR
HD2	200	i (4T) (Twin Headlamps)	2010 - 2015	RR
	250	i Joymax	2007 - 2008	RR
	250	Quadlander	2005 - 2007	RR
GTS	250		2007 - 2008	RR
GTS	250		2007 - 2009	RR
GTS	250	i Joymax (All models)	2009 - 2015	RR
	300	Citymax Quad	2006 - 2006	RR
	300	Cruisym	2017 - 2020	RR
	300	Joymax Z ABS	2017 - 2020	RR
GTS	300	i Sport (All models)	2014 - 2015	RR
GTS	300	Joymax (All Models)	2008 - 2015	RR

TGB

	125	X-Motion	2008 - 2014	RR
	125	X-Motion Ri	2011 - 2012	RR
	250	X-Motion i	2008 - 2010	RR
	300	X-Motion EFi	2010 - 2012	RR

EQUIVALENTS OEM

G7131 LRAO 000	812111	43105 LDH 1E00	43108 HWW 000A	43105 HMA 00DA	43105 SZ2 0000	43105 SZ2 0010

PART NUMBER

287

AD | S3 | S33 RACING

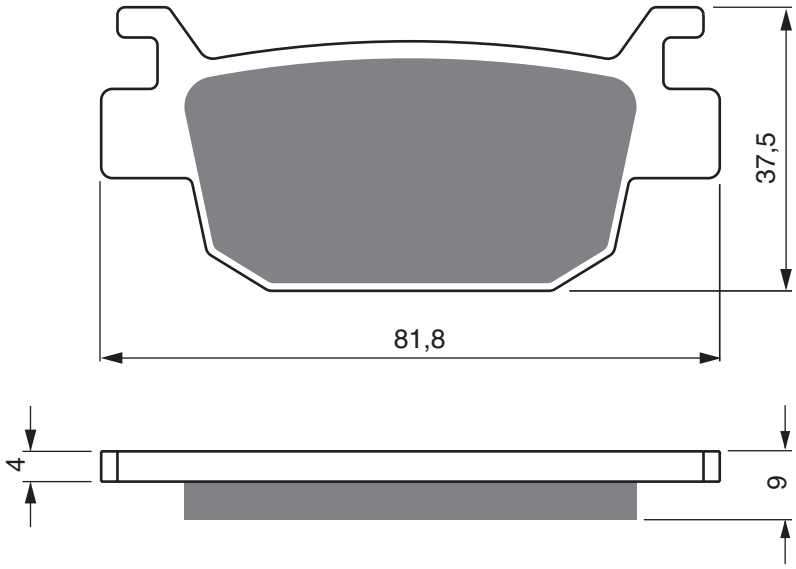

GENERIC

	125	Classic	2017 - 2018	RR

HONDA

FES	125	7/9/A S-Wing (Non ABS Model)	2007 - 2013	RR
FES	125	A7/A9/AA S-Wing (ABS Model)	2007 - 2015	RR
NSS	125	Forza (2 piston caliper)	2015 - 2018	RR
SH	125	i (2 piston caliper/ABS)	2014 - 2021	RR
SH	125	i (3 Piston Caliper/ABS)	2014 - 2021	RR
SH	125	i 9/A/B (Fuel Injection/Rear Disc Model)	2009 - 2012	RR
SH	125	i RA (Fuel Injection/rear disc model)	2010 - 2014	RR
FES	150	7/9/A S-Wing	2007 - 2013	RR
FES	150	S-Wing A7/A9/AA (ABS Model)	2007 - 2013	RR
SH	150	i (2 piston caliper/ABS)	2014 - 2021	RR
SH	150	i (3 Piston Caliper/ABS]	2014 - 2021	RR
SH	150	i 9/A/B (Fuel Injection/Rear Disc Model)	2009 - 2012	RR
SH	150	RA (Fuel Injection/rear disc model)	2010 - 2014	RR
NSS	250	AX5/AX6 Forza Z (ABS)	2005 - 2007	RR
NSS	250	EX5/EX7/EX8 Forza EX (ABS)	2005 - 2008	RR
NSS	250	X5/X7/X8 Forza X	2005 - 2008	RR
NSS	300	AD Forza (ABS)	2013 - 2017	RR
NSS	300	D Forza (ABS)	2018 - 2021	RR
NSS	300	D Forza (Non ABS)	2013 - 2015	RR
SH	300	i (2 piston caliper/ABS)	2016 - 2021	RR
SH	300	i (ABS)	2014 - 2014	RR
SH	300	i 7/8/9/A/B (Non ABS)	2007 - 2012	RR
SH	300	i A7/A8/A9/AA/AB/AC (ABS Model)	2007 - 2013	RR
SH	300	i AR8/AR9/ARA (ABS Model)	2008 - 2010	RR
SH	300	R8/R9/RA (Non ABS)	2008 - 2010	RR
SH	350	i (2 piston caliper/ABS)	2020 - 2021	RR

PEUGEOT

	400	Metropolis Allure (3 Wheel Model/Nissin Caliper)	2017 - 2018	FL	FR
	400	Metropolis RS (3 Wheel Model/Nissin Caliper)	2017 - 2018	FL	FR
	400	Metropolis RX-R (3 Wheel Model / Nisan Caliper)	2017 - 2018	FL	FR

EQUIVALENTS OEM

06435 KSV J01	06435 KSV J02	43251 KTW 901	06435 K40 F11	06435 K04 931	06435 K01 D11	06435 K40 F02

AD	K1	K5	S3	S33 RACING

PART NUMBER

288

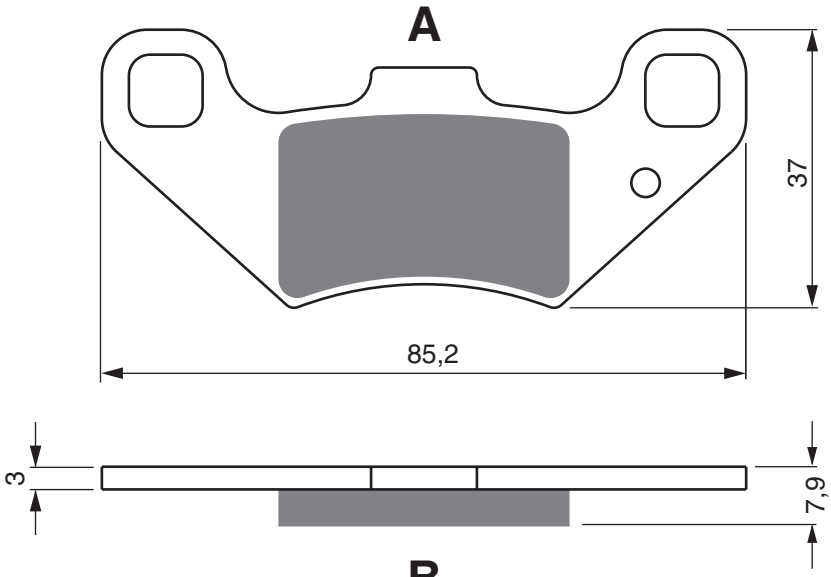

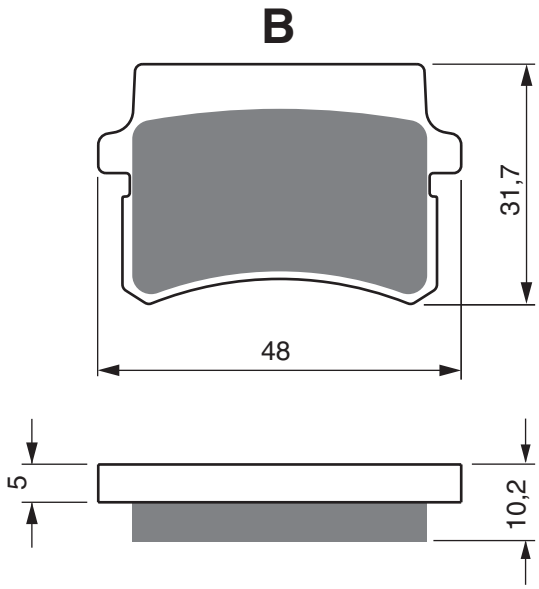

ADLY					
	300	Interceptor Quad	2008 - 2008	FL	FR
EXPLORER					
	300	Ranger 2x4/4x4	2008 - 2009	FL	FR
HAMMERHEAD BUGGIES					
	80	T	2008 - 2009	RR	
ES	150	S Supersport 11 R	2008 - 2009	FL	FR
KAZUMA QUADS					
MF	90	Falcon		FL	FR RR
MOTORHISPANIA					
KN2	50		2012 - 2013	RR	
MH10	50	Eco Urban	2014 - 2014	FL	
MH10	50	Enduro	2013 - 2014	FL	
MH10	50	Pro Enduro	2013 - 2014	FL	
MH10	50	Pro SM	2013 - 2013	FL	
MH10	50	Pro Urban	2014 - 2014	FL	
MH10	50	SM	2013 - 2013	FL	
RYZ	50	Enduro	2013 - 2014	FL	
RYZ	50	Pro SM	2013 - 2013	FL	
RYZ	50	SM	2013 - 2013	FL	
	125	Duna	2013 - 2014	FL	
	125	Duna Pro	2013 - 2014	FL	
KN2	125	(125/4T)	2012 - 2014	RR	
LC	125	Hard Road SM	2012 - 2012	RR	
MH10	125	Enduro	2013 - 2014	FL	
MH10	125	SM	2013 - 2013	FL	
PGO					
	50	Bugrider (Buggie)	2006 - 2006	FL	FR
	150	Bugrider		FL	FR
BR	150	A Bugxter	2005 - 2007	FL	FR
BR	200	Bugrider	2007 - 2012	FL	FR
	250	Bug		FL	FR
	250	Bugrider		FL	FR
	250	SS Bugrider (Single Seat)		FL	FR
BR	250	E Bugrider	2005 - 2012	FL	FR
QUADZILLA					
RV	125	Midi RV Bug		FL	FR
RV	150	Midi RV Buggie		FL	FR
BR	200		2007 - 2008	FL	FR
BR	250			FL	FR
XRV	250	(Off road)	2006 - 2007	FL	FR
XRV	250	E	2006 - 2007	FL	FR
RL	300	Buggie	2007 - 2008	FL	FR
XL	300			FL	FR

EQUIVALENTS OEM

07-020-016	B54033 10000	585 010100005

PART NUMBER

289

AD	S3	S33 RACING	GP5	GP6	GP7

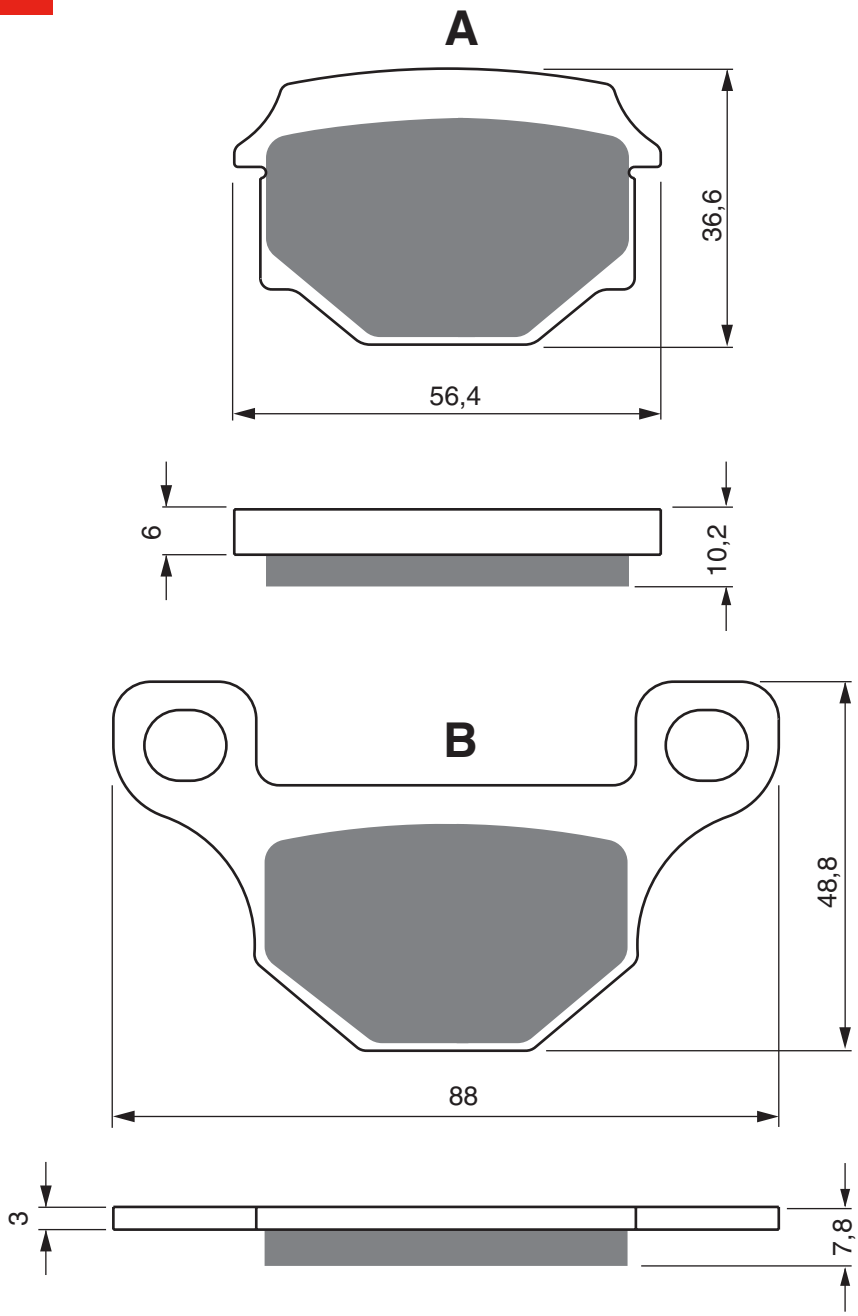

AJP

PR4	125	Enduro	2010 - 2012	RR
PR4	125	Enduro Pro	2010 - 2012	RR
PR4	125	Supermoto	2010 - 2012	RR
PR4	125	Supermoto Pro	2010 - 2011	RR
PR4	200	Enduro	2010 - 2011	RR
PR4	200	Enduro Pro	2010 - 2011	RR
PR4	200	SM Pro	2010 - 2011	RR
PR4	200	Supermoto	2010 - 2011	RR

APRILIA

RS-4	50	(4T) (AJP rear caliper)	2011 - 2014	RR
RS4	125	(4T) (AJP Calipers)	2011 - 2020	RR
RX	125	(AJP Rear Caliper)	2008 - 2012	RR

BRANSON

BM	125		2008 - 2008	FL
BM	125	Retro	2008 - 2008	FL
BM	125	Sport	2008 - 2008	FL

CF MOTO

CF	150	Leader	2010 - 2012	FL

DERBI

	50	Atlantis (2T/AC) (12" / 5 spoke wheels/200mm Disc From Ref no 8G253172/5 Bolt)	2007 - 2011	FL
	50	Atlantis (4T)	2007 - 2009	FL
	125	Mulhacen (4T) From Ref. No. 7N001791 (Spoke Wheel / Single Pad Fixing)	2007 - 2010	RR
	125	Mulhacen (4T) Up to Ref No 7N001790 / Spoke Wheel / 2 Pad Fixing	2007 - 2007	RR

AD | S3 | S33 RACING | GP5 | GP6 | GP7

PART NUMBER

289

	125	Mulhacen Cafe (Cast wheel/Radial Caliper)	2008 - 2010	RR	
	125	Terra Adventure	2007 - 2014	RR	
	125	Terra Euro (Single Pin Pad Fixing)	2007 - 2011	RR	
DRD	125	Senda R	2010 - 2012	RR	
DRD	125	Senda SM	2010 - 2014	RR	
GPR	125	(4T) 4V	2009 - 2014	RR	
EASY RIDER					
JC	125	/8 Dragon	1998 - 1998	FR	
GAS GAS					
EC	250	Cami F (4T)	2014 - 2015	RR	
HAO-QING					
	125	2C	2002 - 2002	FL	
HARTFORD					
HD	125	L	2000 - 2004	FL	
HD	150	L	2000 - 2004	FL	
JINCHENG					
JC	125	7B	1997 - 1997	FL	
KEEWAY					
	125	Speed	2006 - 2007	FL	
	125	Speed	2007 - 2012	FL	RR
	150	Speed	2006 - 2006	FL	
	150	Speed	2007 - 2012	FL	RR
MASH					
	50	Dirt Track	2018 - 2020	FL	
	50	Fifty (Roadster 50)	2018 - 2020	FL	
	125	Scrambler	2014 - 2016	FL	
	125	Seventy	2014 - 2020	FL	
MOTO-ROMA					
	125	Virage	2001 - 2001	FL	
SK	125	(Cast Wheel)	2010 - 2012	FL	
RX	50	R	2008 - 2014	RR	
MOTORHISPANIA					
	125	Custom	2012 - 2012	FL	
	125	Duna Hard Road Enduro	2008 - 2012	FL	
	125	Duna Sport City Supermotard	2008 - 2010	RR	
	125	Duna Supermotard	2014 - 2014	RR	
KN1	125	AC/LC	2009 - 2014	RR	
MH7	125	Naked (Air cooled/Liquid cooled)	2008 - 2014	RR	
RX	125	R	2008 - 2014	RR	
PEUGEOT					
NK7	50	Naked	2009 - 2012	RR	
XPS	50	SM	2009 - 2009	FL	
XPS	50	SM	2009 - 2009	RR	
XPS	50	Top Road (17" front wheel)	2010 - 2012	FL	
XPS	50	Track (21" front wheel)	2011 - 2012	FL	
XR7	50	(2T)	2008 - 2012	RR	
XR7	50	Naked	2009 - 2012	RR	
RIEJU					
	50	Tango (Spoke wheel)	2011 - 2011	FL	
	50	Tango Motard	2009 - 2010	FL	
	50	Tango Motard (Cast wheel)	2011 - 2011	FL	
MRT	50	(Single piston caliper)	2009 - 2020	FL	RR
MRT	50	Pro (Radial/double piston caliper)	2009 - 2020	RR	
MRT	50	Pro Supermotard (Rad.cal./Cast wheel)	2009 - 2020	RR	
MRT	50	Supermotard (Cast wheel/single piston caliper)	2009 - 2020	FL	RR
NKD	50		2008 - 2010	RR	
RS2	50	Matrix/Pro	2007 - 2010	RR	
RS3	50		2011 - 2015	RR	
RS3	50	Pro	2011 - 2015	RR	
	125	Marathon (Air cooled)	2010 - 2015	FL	RR
	125	Marathon Pro (Radial /double piston caliper)	2009 - 2020	RR	
	125	Marathon Pro Supermotard (Cast wheel/Rad.cal.)	2009 - 2020	RR	
	125	Marathon SM (Air cooled/Cast Wheel)	2010 - 2015	FL	RR
	125	Marathon Supermotard	2011 - 2015	FL	RR
	125	Tango Motard (Cast wheel)	2008 - 2010	RR	
NKD	125		2008 - 2010	RR	
RS2	125	/ Pro	2007 - 2010	RR	
	200	Marathon Pro SM	2011 - 2015	RR	
SHERCO					
SE	50	0,5	2011 - 2011	FL	
SM	50	0,5	2011 - 2011	FL	
SU	50	Urban Base (2T) (Cast wheels)	2010 - 2010	FL	
SE	125	1.25 F	2011 - 2011	FL	
SM	125	1.25 F Black Panther	2011 - 2011	FL	
SINNIS					
QM	125	2V2 Max II	2012 - 2014	FL	
QM	125	GY-2D Trackstar (4T)	2010 - 2014	FL	
QM	125	GY-2X Cafe	2012 - 2014	FL	
QM	125	GY-2XR Retro Star	2012 - 2014	FL	
QM	125	Vista 2C	2008 - 2010	FL	
SUPERBYKE					
RFX	50	Road Trail		FL	
RFX	125	Road Trail		FL	
SUZUKI					
GN	125	Z/D/K Gold Coloured Cast Wheels/Aisin Caliper	1982 - 1990	FL	
GS	125	ESD/ESF/ESK/ESM	1983 - 1994	FL	
GX	125	(SJ 125)	2003 - 2003	FL	
TGB					
302		Sport (50cc)	2003 - 2008	FL	
304		Sport (125cc)	2003 - 2004	FL	
309		RS (50cc)	2002 - 2003	FL	
404		Executive	2003 - 2008	FL	
	50	City (2T)	2007 - 2008	FL	
	50	City (4T)	2007 - 2011	FL	
R	50	X Bullet	2006 - 2009	FL	
R	50	X Bullet	2010 - 2014	FL	
	125	Delivery/Express	2004 - 2014	FL	
303	125	R Hawk (Laser)	2004 - 2014	FL	
R	125	X Bullet	2008 - 2009	FL	
R	125	X Bullet	2010 - 2014	FL	
303	150	R Hawk (Laser)	2004 - 2014	FL	
W.K.BIKES					
RT	125		2015 - 2015	FL	
WUYANG					
WY	125	12	2006 - 2007	FL	
WY	125	16C	2006 - 2007	FL	
ZONTES					
	50	Tiger (4T)	2014 - 2015	FL	
ZT	125	- 3A Tiger	2009 - 2015	FL	
ZT	125	- 8A Panther	2009 - 2015	FL	

EQUIVALENTS OEM

59301 39841	59300 29820	45120 128 000	864121	864428	866692	894051
413610	45110 J00 P001	00TRS01A0068	B044221	K01310073	0/000 930 0090	114100100000E

PART NUMBER

290

AD | S3 | S33 RACING

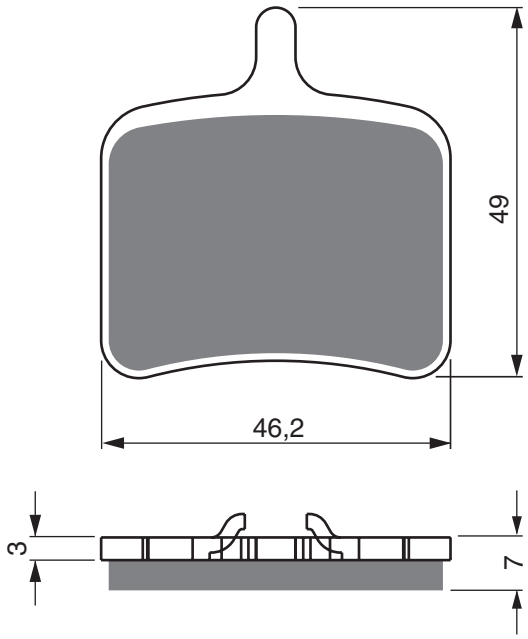

BUELL

1 125	CR	2009 - 2010	RR
1 125	R	2008 - 2010	RR

EBR

1 190	RS (Sport)	2014 - 2015	RR
1 190	RX (Sport)	2014 - 2015	RR
1 190	SX (Naked)	2014 - 2015	RR

EQUIVALENTS OEM

H301 1AM	IC000818

AD	K1	K5	S3	S33 RACING

PART NUMBER

291

With pin

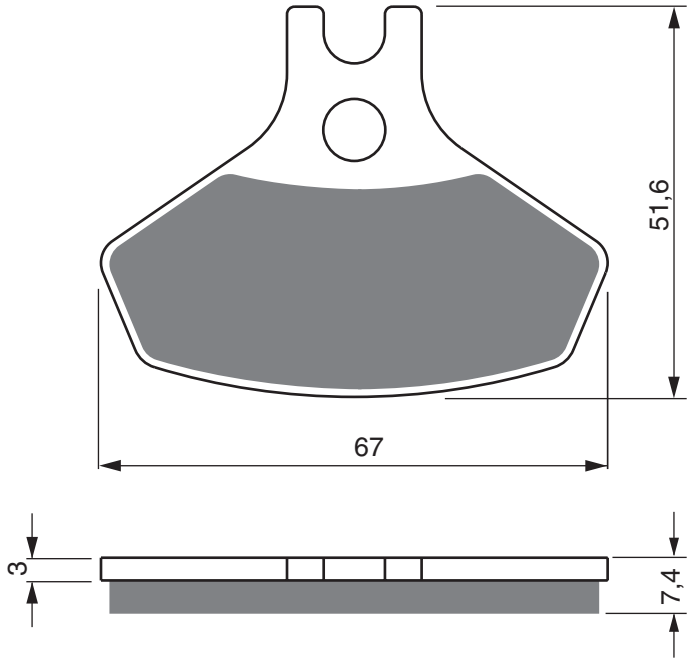

CAN-AM

		Commander Electric 9KW	2015 - 2015	FL	FR
DS	450	(2x4/EFi)	2008 - 2015	FL	FR
DS	450	X (2x4/EFi)	2008 - 2009	FL	FR
DS	450	XXC/XXM	2010 - 2015	FL	FR

EQUIVALENTS OEM

705600402	Z 150 9260

Disc Brake Pads

PART NUMBER

292

AD | S3 | S33 RACING

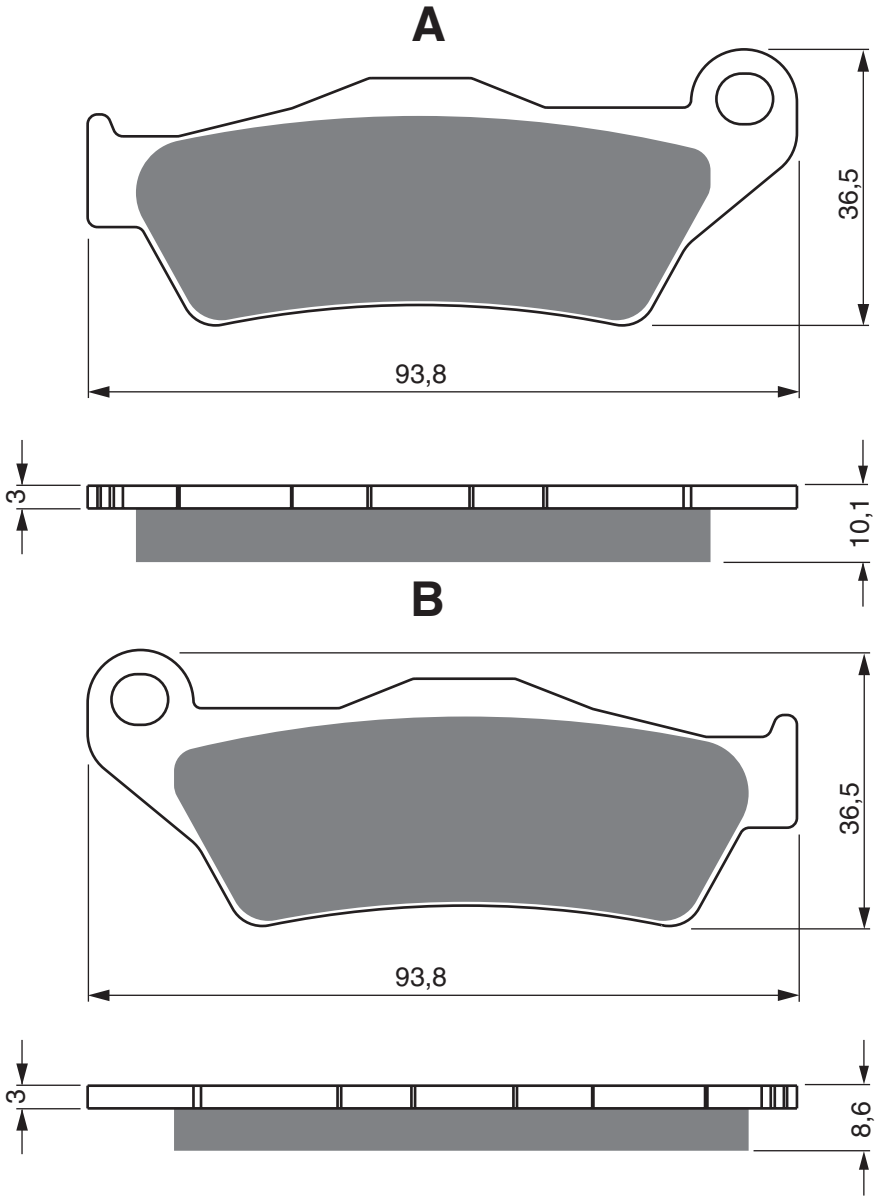

BMW

F	800	R	2009 - 2014	RR
R	850	C (Cast Wheel/ABS)	1997 - 2000	RR
R	850	C (Spoke Wheel/ABS)	1996 - 2000	RR
R	850	GS (Std & ABS Models)	1996 - 2000	RR
R	850	R	2004 - 2006	RR
R	850	R (Cast Wheel/ABS)	1994 - 2002	RR
R	850	R (Spoke Wheel)	1994 - 1996	RR
R	850	RT	2006 - 2006	RR
R	850	RT (Cast Wheel/ABS)	1996 - 2001	RR
R	850	RT (Spoke Wheel)	1996 - 2001	RR
S	1 000	XR	2019 - 2021	RR
S	1 000	XR (Disc has fixed bobbins)	2015 - 2018	RR
R	1 100	GS (STD & ABS)	1993 - 1999	RR
R	1 100	R (Cast Wheel)	1993 - 2001	RR
R	1 100	R (Spoke Wheel)	1993 - 1996	RR
R	1 100	RT (Cast Wheel/ABS)	1994 - 2001	RR
R	1 100	RT (Spoke Wheel)	1994 - 2001	RR
R	1 100	S (ABS)	1996 - 2000	RR
R	1 100	S (ABS)	2000 - 2006	RR
R	1 100	S (Non ABS)	2000 - 2003	RR
R	1 150	GS (EVO - R21/0415/0495)	2001 - 2003	RR
R	1 150	GS (R21/0415/0495)	1998 - 2001	RR

AD | S3 | S33 RACING

PART NUMBER

292

R	1 150	GS Adventure (Evo R21A 0441/0492)	2001 - 2006	RR
R	1 150	R	2001 - 2006	RR
R	1 150	R Rockster (R21//E1/00041)	2003 - 2006	RR
R	1 150	R Rockster Edition 80	2004 - 2004	RR
R	1 150	RS (Integral ABS)	2001 - 2004	RR
R	1 150	RT (Integral ABS)	2000 - 2006	RR
HP2	1 200	Enduro	2005 - 2009	RR
HP2	1 200	Megamoto (K25)	2007 - 2010	RR
HP2	1 200	Sport (K29)	2008 - 2011	RR
K	1 200	R (K27/0378/Tokico caliper)	2005 - 2010	RR
K	1 200	R Sport	2007 - 2009	RR
R	1 200	(Independence/Cast Wheel)	2000 - 2002	RR
R	1 200	(Independence/Spoke Wheel)	2000 - 2002	RR
R	1 200	C (Cast Wheel/ABS)	1996 - 2002	RR
R	1 200	C (Spoke Wheel/ABS)	1996 - 2002	RR
R	1 200	C Classic	2003 - 2004	RR
R	1 200	C Independent (Cast wheel)	2003 - 2004	RR
R	1 200	C Montauk	2004 - 2004	RR
R	1 200	GS	2004 - 2007	RR
R	1 200	GS (30 years GS)	2011 - 2011	RR
R	1 200	GS (Cast wheel)	2010 - 2011	RR
R	1 200	GS (K25/0307/Cast/Spoke wheel)	2002 - 2007	RR
R	1 200	GS (Water Cooled Model)	2013 - 2013	RR
R	1 200	GS Adventure (30 years GS)	2011 - 2011	RR
R	1 200	GS Adventure (K25/0382/Spoke Wheel)	2005 - 2007	RR
R	1 200	GS Adventure (Spoke wheel)	2010 - 2013	RR
R	1 200	GS Adventure / M (K25/0380/Spoke wheel)	2006 - 2009	RR

R	1 200	GS Adventure Triple Black	2012 - 2012	RR
R	1 200	GS Rallye (Spoke wheel)	2012 - 2012	RR
R	1 200	GS Triple Black (Spoke wheel)	2011 - 2013	RR
R	1 200	GS/M (K25/0303/Cast wheel)	2006 - 2009	RR
R	1 200	Nine T (K21) (1170cc)	2014 - 2021	RR
R	1 200	Nine T Cafe Racer (K32) (1170cc)	2016 - 2021	RR
R	1 200	Nine T Pure (K22) (1170cc)	2016 - 2021	RR
R	1 200	Nine T Scrambler (K21) (1170cc)	2016 - 2021	RR
R	1 200	Nine T Urban GS (K33) (1170cc)	2017 - 2021	RR
R	1 200	R (K27/0378)	2007 - 2013	RR
R	1 200	R Classic	2011 - 2014	RR
R	1 200	R SE	2010 - 2011	RR
R	1 200	RT (Disc has fixed bobbins)	2010 - 2013	RR
R	1 200	RT (K26/0368/Brembo caliper)	2005 - 2009	RR
R	1 200	RT SE (Disc has fixed bobbins)	2010 - 2013	RR
R	1 200	S (K29/0366/Brembo caliper)	2006 - 2008	RR
R	1 200	ST K28/0328	2003 - 2008	RR
K	1 300	GT (Disc has fixed bobbins)	2009 - 2011	RL
K	1 300	GT (Disc has fixed bobbins)	2009 - 2011	RR
K	1 300	GT SE (Disc has fixed bobbins)	2010 - 2011	RR
K	1 300	R (Disc has fixed bobins)	2009 - 2012	RL
K	1 300	R Carbon (Disc has fixed bobbins)	2012 - 2012	RR
K	1 300	R Dynamic (Disc has fixed bobbins)	2011 - 2015	RR
K	1 300	S (Fixed bobbins - Non & ABS Models)	2009 - 2015	RR
K	1 300	S HP (Fixed bobbins - Non & ABS Models)	2012 - 2012	RR
K	1 300	S Sport (Fixed bobbins - Non & ABS models)	2012 - 2015	RR

EQUIVALENTS OEM

34 21 2 314 947	34 21 2 335 465	34 21 2 330 633	34 21 7 660 281	34 21 8 556 442

PART NUMBER

293

AD | S3

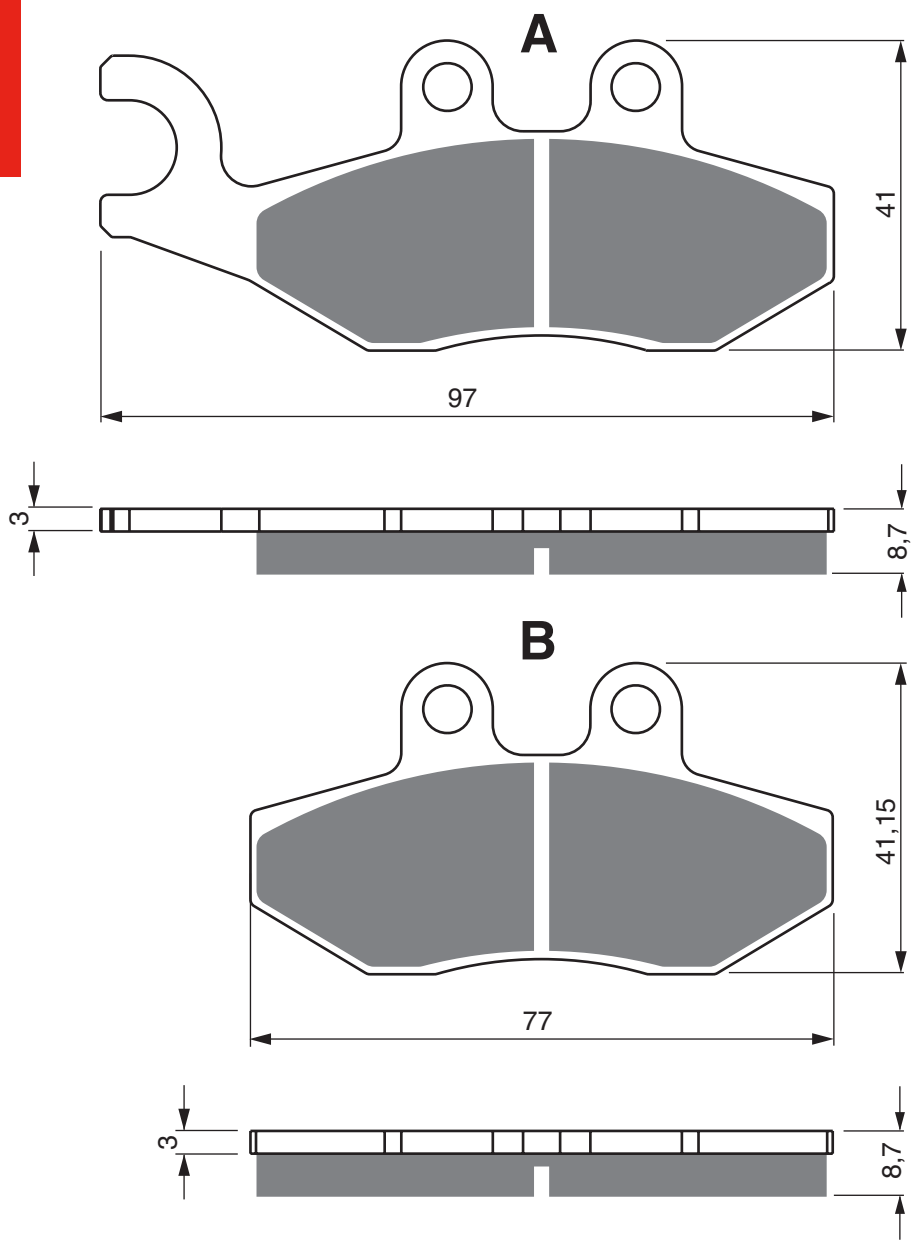

APRILIA					
	50	Sport City One (2T)	2008 - 2011	FL	
	50	Sport City One (4T)	2008 - 2009	FL	
SR	50	Motard (2T)	2012 - 2015	FL	
SR	50	Motard (4T/4V)	2012 - 2015	FL	
	125	Sport City One	2008 - 2011	FL	
SR	125	Max (4T)	2011 - 2015	FL	RR
SR	125	Motard (4T)	2012 - 2015	FL	
SR	300	Max (4T)	2011 - 2015	FL	
SR	300	Max (4T)	2011 - 2015	RR	
SRV	850		2012 - 2014	RR	
DERBI					
	50	Boulevard (2T)	2009 - 2012	FL	
	50	Boulevard (4T)	2009 - 2009	FL	
	50	Variant Sport (2T) (2T)	2012 - 2012	FL	
	50	Vibrant Sport (2T)	2012 - 2012	FL	
	125	Boulevard (4T)	2008 - 2012	FL	
	125	Variant Sport (4T)	2012 - 2012	FL	
GILERA					
	50	Runner PJ/SP	2006 - 2014	FL	
DNA	50	(Heng Tong Caliper)	2001 - 2005	FL	
	125	Nexus	2007 - 2012	FL	
	125	Nexus	2007 - 2012	RR	
DNA	125	(Heng Tong Caliper)	2001 - 2003	FL	
FX	125	Runner (Rear drum brake model/Heng Tong front caliper)	1997 - 2002	FL	
FXR	125	Runner (Rear drum brake model / Heng Tong front caliper)	1999 - 2002	FL	
VX	125	4T (Grimeca Caliper)	2001 - 2004	FL	
VX	125	Runner / ST (4T)	2005 - 2014	FL	
DNA	180	(Heng Tong Caliper)	2001 - 2003	FL	
FX	180	Runner (Rear drum brake model/Heng Tong front caliper)	1997 - 2002	FL	
FXR	180	Runner (Rear Drum brake model/Heng Tong front caliper)	1997 - 2002	FL	
VX	180	4T (Heng Tong Caliper)	2001 - 2004	FL	
VX	200	Runner/ST (4T) (6 bolt rear disc) (Heng Tong Caliper)	2005 - 2011	FL	
VXR	200	Runner (4T) (6 Bolt Rear Disc) (Heng Tong Caliper)	2002 - 2004	FL	
	250	Nexus ie	2007 - 2008	FL	RR
	300	Nexus i	2008 - 2012	FL	RR
	500	Fuoco LT (4V/4T)	2013 - 2015	RR	
	500	Fuoco RC/ie	2007 - 2013	RR	
GP	800	(Chain Drive)	2008 - 2014	RL	RR
KEEWAY					
K2	125		2007 - 2007	FL	RR
K2	150		2007 - 2007	FL	RR
K2	250		2007 - 2007	FL	RR
PIAGGIO VESPA					
GTS		4V ABS/Super Sport/Touring	2018 - 2019	FL	
	50	Fly (2T)	2005 - 2018	FL	
	50	Fly (4T)	2005 - 2018	FL	
	50	Liberty (2T/4T) (10" Spoke Cast Wheels)	2009 - 2020	FL	

AD S3

PART NUMBER

293

	50	New Fly (4T/4V)	2012 - 2013	FL	
	50	Primavera (2T)	2013 - 2015	FL	
	50	Primavera (4T/4V)	2013 - 2015	FL	
	50	Primavera Touring (2T)	2015 - 2015	FL	
	50	Primavera Touring (4T/4V)	2015 - 2015	FL	
	50	Sprint (4T/3V)	2014 - 2020	FL	
	50	Sprint S (2T)	2015 - 2015	FL	
	50	Typhoon (2T) (12"wheels)	2010 - 2020	FL	
	100	Fly (4T)	2007 - 2015	FL	
	125	Beverly	2007 - 2007	FL	
	125	Beverly (4T) (Multi spoke cast wheel)	2011 - 2014	FL	
	125	Beverly B (Heng Tong Caliper)	2002 - 2006	FL	RR
	125	Beverly ie S	2014 - 2015	FL	
	125	Beverly S	2007 - 2007	FL	RR
	125	Beverly Tourer	2008 - 2009	FL	RR
	125	Carnaby	2007 - 2009	FL	RR
	125	Fly (4T/2V)	2005 - 2011	FL	
	125	Fly (4T/3V) Rear Disc Model	2012 - 2015	FL	
	125	ie Fly (4T/3V) Rear Disc Model	2012 - 2015	FL	
	125	New Fly ie (3V)	2012 - 2013	FL	
	125	Primavera (4T/3V/ABS)	2013 - 2020	FL	
	125	Primavera (4T/3V/Non ABS)	2013 - 2015	FL	
	125	Primavera Touring (4T/3V/ABS)	2015 - 2015	FL	
	125	Primavera Touring (4T/3V/Non ABS)	2015 - 2015	FL	
	125	Skipper ST (4T)(Heng Tong caliper)	2000 - 2004	FL	
	125	Sprint (4T/3V/ABS)	2015 - 2020	FL	
	125	Sprint S (4T/3V/ABS)	2015 - 2020	FL	
	125	Sprint S (4T/3V/Non ABS)	2015 - 2020	FL	
	125	Super Hexagon GTX (11" wheels) (Heng Tong Calipers)	2000 - 2000	FL	
	125	Super Hexagon GTX (12" wheels)	2001 - 2003	FL	
	125	Typhoon (4T) (12"wheels)	2010 - 2015	FL	
	125	Xevo	2007 - 2016	FL	
946	125	Special (4T/3V/cc)	2013 - 2015	FL	
GT	125	L Granturismo (Heng Tong caliper)	2003 - 2006	FL	
GTS	125		2007 - 2011	FL	
GTS	125	Super ie (inc ABS Models)	2009 - 2020	FL	
GTS	125	Supersport ie (Inc ABS Models)	2013 - 2015	FL	
GTV	125		2007 - 2009	FL	
X10	125	ie (4V/4T/EFI/All Models)	2012 - 2015	FL	
X7	125	cc	2008 - 2009	FL	
X7	125	Evo ie (EFI)	2009 - 2012	FL	
X8	125	(Brembo Rear Caliper)	2004 - 2005	FL	
X8	125	(Heng Tong Rear Caliper)	2005 - 2006	FL	
X8	125	ie (Heng Tong Rear Caliper)	2007 - 2007	FL	
X8	125	Street	2007 - 2007	FL	
X9	125	Evolution	2005 - 2007	FL	
	150	Fly (4T)	2005 - 2012	FL	
	150	Primavera (4T/3V/ABS)	2013 - 2020	FL	
	150	Primavera (4T/3V/Non ABS)	2013 - 2015	FL	
	150	Primavera Touring (4T/3V/ABS)	2015 - 2015	FL	
	150	Primavera Touring (4T/3V/Non ABS)	2015 - 2015	FL	
	150	Skipper ST (4T) (Heng Tong Caliper)	2000 - 2004	FL	
	150	Sprint S (4T/3V/ABS)	2015 - 2020	FL	
X8	150	Street	2007 - 2007	FL	
	180	Super Hexagon GTX (11" wheels) (Heng Tong Calipers)	2000 - 2000	FL	
	180	Super Hexagon GTX (12" Wheels)	2001 - 2003	FL	
	200	Beverly B (Heng Tong Caliper)	2002 - 2005	FL	RR
	200	Carnaby	2007 - 2009	FL	RR
GT	200	L Granturismo (Heng Tong caliper)	2003 - 2006	FL	
X8	200	(Heng Tong Rear Caliper)	2004 - 2005	FL	
	250	Beverley S ie	2007 - 2007	FL	RR
	250	Beverly (Carb.)	2004 - 2007	FL	RR
	250	Beverly Cruiser ie	2007 - 2008	FL	RR
	250	Beverly ie	2006 - 2007	FL	RR
	250	Beverly Tourer ie	2008 - 2009	FL	RR
	250	Carnaby ie	2008 - 2009	FL	RR
	250	Xevo ie	2007 - 2010	FL	
GTS	250	ie/ABS	2005 - 2011	FL	
GTV	250	ie	2007 - 2009	FL	
X7	250	cc ie	2008 - 2009	FL	
X8	250	ie	2005 - 2007	FL	
X9	250		2005 - 2006	FL	
	300	Beverly (278cc/4T) (Multi spoke cast wheel)	2010 - 2015	FL	
	300	Beverly ie S	2014 - 2020	FL	
	300	Beverly Police ABS ASR (278cc)	2016 - 2018	FL	
	300	Carnaby Cruiser	2008 - 2011	FL	RR
	300	Carnaby ie	2012 - 2012	FL	RR
GTS	300	ie (Non ABS Models)	2008 - 2015	FL	
GTS	300	ie Super (Non ABS Models)	2008 - 2015	FL	
GTS	300	ie Super Sport (Non ABS Models)	2010 - 2015	FL	
GTS	300	ie Touring (Non ABS Models)	2011 - 2016	FL	
GTV	300	ie	2010 - 2013	FL	
X7	300	Evo	2009 - 2012	FL	
	350	Beverly ie Sport Touring ABS (330cc/4T)	2016 - 2020	FL	
X10	350	ie (4V/4T/EFi)	2012 - 2015	FL	
	400	Beverley ie	2007 - 2007	RR	
	400	Xevo ie	2007 - 2010	FL	RR
MP3	400	ie	2007 - 2010	RR	
MP3	400	LT ie	2009 - 2010	RR	
MP3	400	Touring ie	2011 - 2012	RR	
MP3	400	Touring LT ie	2011 - 2012	RR	
X8	400	ie	2006 - 2008	FL	RR
MP3	500	LT Business	2011 - 2015	RR	
MP3	500	LT Business ABS (13" Front Wheel/14" Rear Wheel))	2014 - 2020	RR	
MP3	500	LT Sport	2011 - 2015	RR	
MP3	500	LT Sport ABS (13" Front Wheel/14" Rear Wheel)	2014 - 2018	RR	
MP3	500	Touring Business ie	2011 - 2012	RR	
MP3	500	Touring Sport ie	2011 - 2012	RR	
X10	500	ie (4V/4T/EFi)	2012 - 2015	FL	
RIEJU					
	125	City Line ie	2013 - 2015	FL	
	300	City Line ie	2014 - 2015	FL	

EQUIVALENTS OEM

497072	497116	647078	650983	651253	668017

PART NUMBER

294

AD	K5	S3	S33 RACING

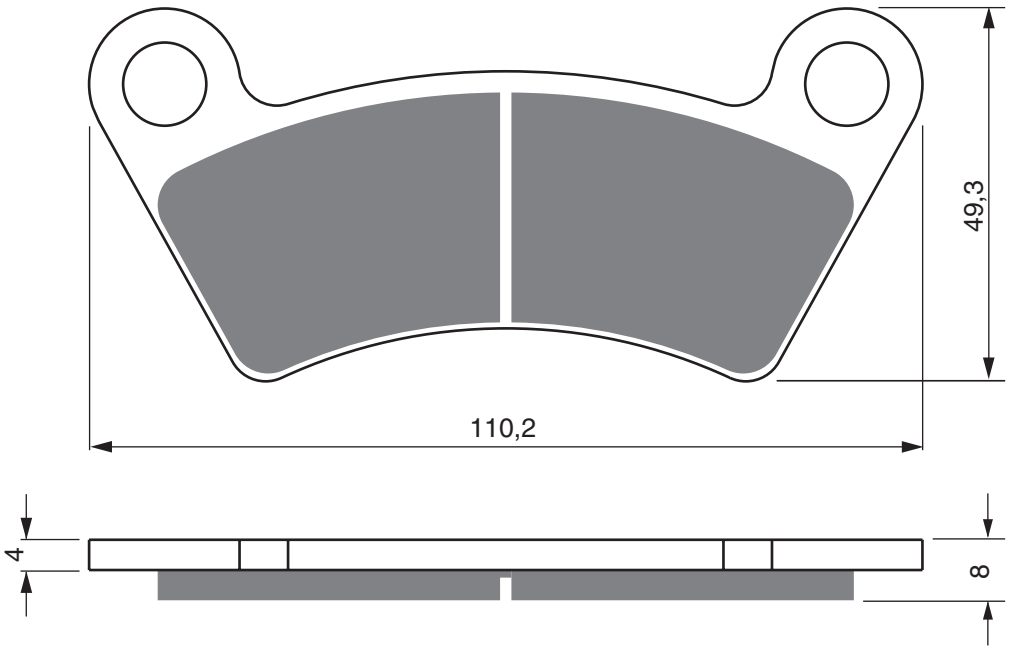

BOROSSI JOYNER

BB	250	SR		FL	FR
BB	650	SR		FL	FR
BB	650	UV 4x4		FL	FR
BB	800			FL	FR
BB	800	UV 4x4		FL	FR
BB	1 100			FL	FR
BB	1 100	TR 4x4		FL	FR
BB	1 100	XR		FL	FR
BB	1 600	-2		FL	FR
BB	1 600	-4		FL	FR
BB	2 000			FL	FR

KEEWAY

GTX	300	Quad	2010 - 2011	RR	

LINHAI

CUV		Jobber (4x4)	2013 - 2013	FL	FR

QUADZILLA

CUV	300	(4x4 Super Utility Side x Side)	2008 - 2008	FL	FR
CUV	300	E 4x4 Side x Side	2008 - 2009	FL	FR
	325	4x4	2010 - 2011	RR	

EQUIVALENTS OEM

26825	4 3 01 3370

AD	K1	K5	S3	S33 RACING

PART NUMBER

295

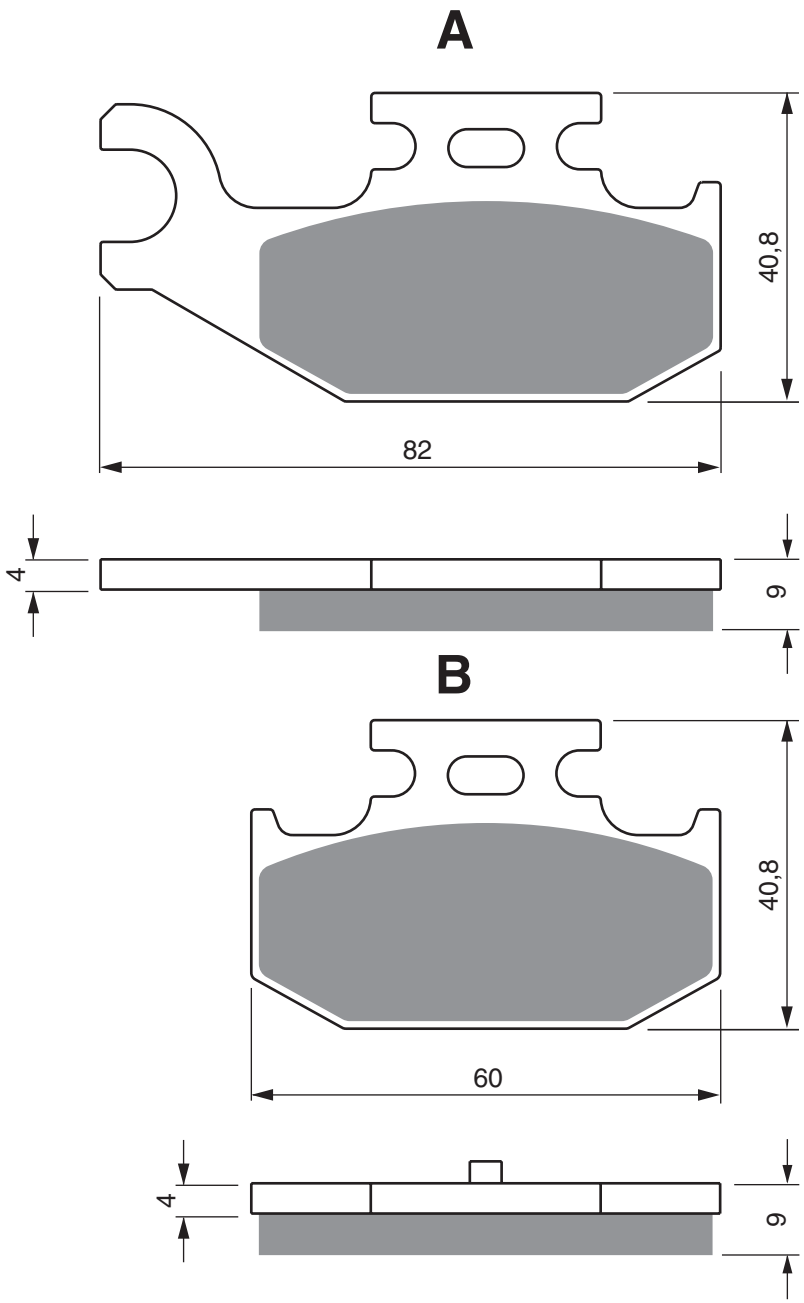

YAMAHA

YXR	66	FAS/FAT Rhino 4x4 Side x Side	2004 - 2005	RR
YFM	700	RV/RW/RX/RY/RA/RB Raptor	2006 - 2012	RR

EQUIVALENTS OEM

1S3 W0046 00	5UG W0046 00	45802 115 0000	44203 115 0000

PART NUMBER

296

AD	S3	S33 RACING	GP5	GP6	GP7

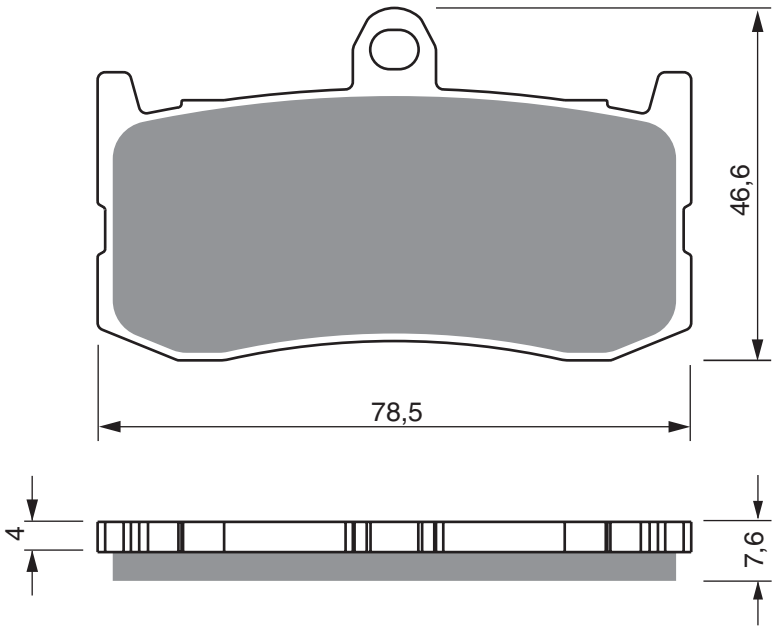

TRIUMPH

675	Daytona (Nissin F/Brembo R Calipers)	2013 - 2017	FL	FR
675	Daytona Black Monobloc radial caliper	2009 - 2012	FL	FR

EQUIVALENTS OEM

T2021221	107 A486 55

Disc Brake Pads

AD	K1	K5	K5-LX	S3	S33 RACING

PART NUMBER

297

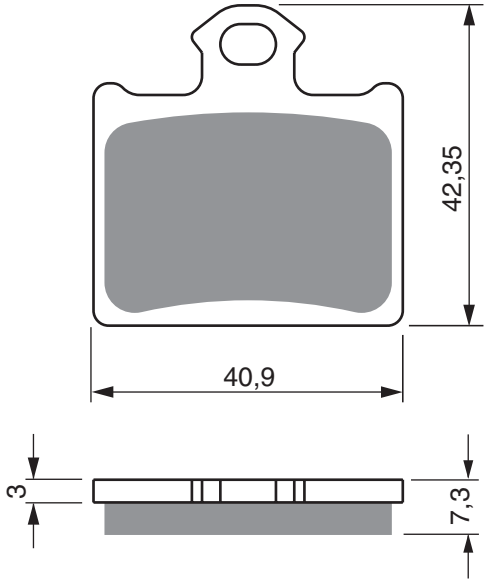

HUSQVARNA				
CR	65		2011 - 2013	RR
TC	85	(2T) (17"/14" wheels)	2014 - 2020	RR
TC	85	(2T) (19"/16" wheels)	2014 - 2020	RR
KTM				
E-SM		Freeride	2015 - 2017	RR
E-SX		Freeride	2014 - 2017	RR
E-XC		Freeride	2015 - 2020	RR
SX	85	(17"/14" wheels - 220mm F/Disc/Radial Caliper)	2012 - 2015	RR
SX	85	(17"/14" wheels - 240mm F/Disc/Radial Caliper)	2016 - 2020	RR
SX	85	(19"/16" wheels - 220 F/Disc/Radial Caliper)	2012 - 2012	RR
SX	85	(19"/16" wheels - 240mm F/Disc Caliper)	2013 - 2020	RR
	250	Freeride (2T)	2014 - 2017	RR
	350	Freeride (4T)	2012 - 2017	RR
SWM				
MC	650	R	2018 - 2018	RR

EQUIVALENTS OEM

470 130 90 300	8000H7138

PART NUMBER

298

AD	S3	S33 RACING	GP5	GP6	GP7

1 set = 2 pcs small/large

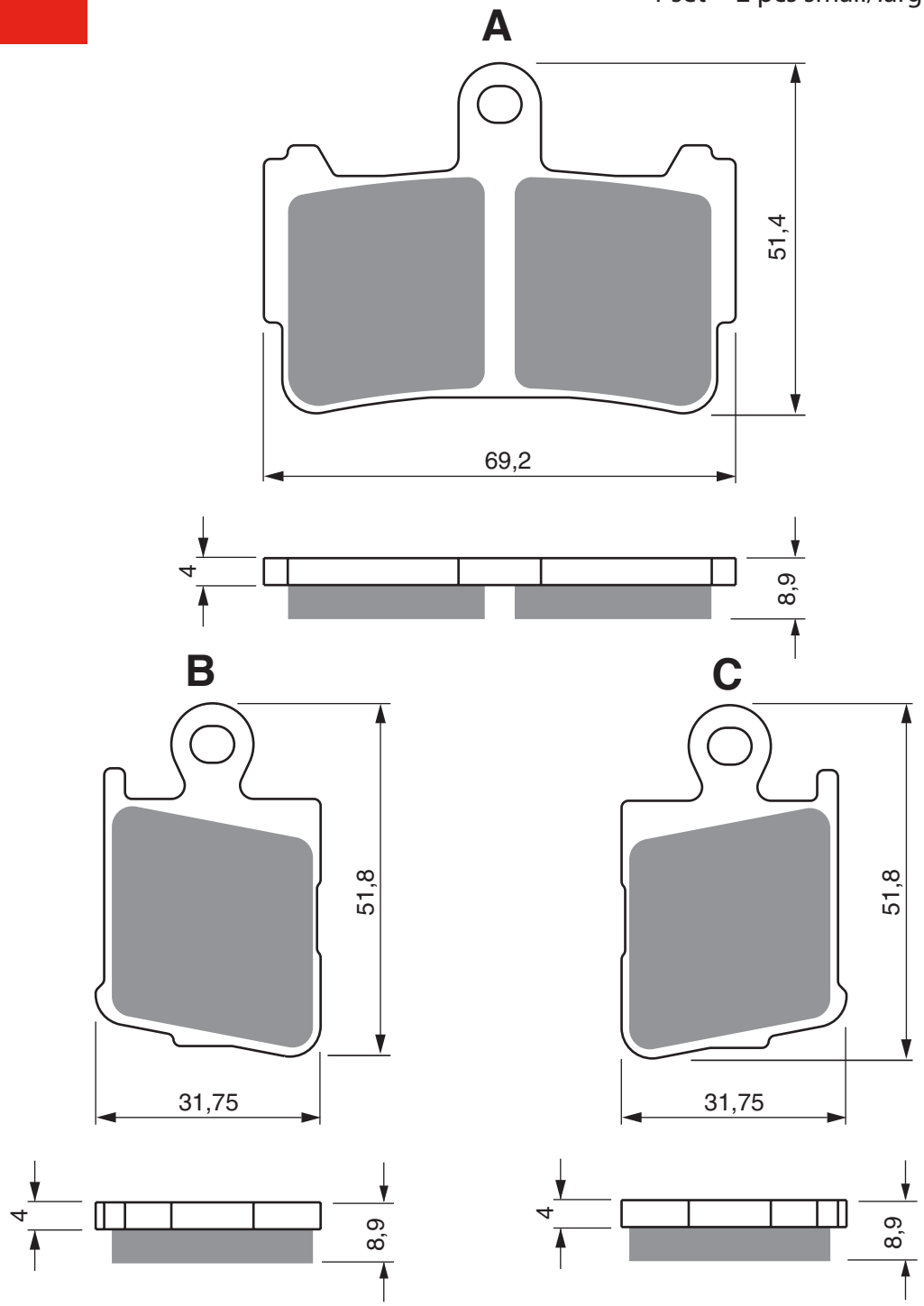

HONDA

VFR	1 200	FA	2010 - 2016	FL	FR
VFR	1 200	FA GT	2014 - 2015	FL	FR
VFR	1 200	FAD DCT	2010 - 2017	FL	FR
VFR	1 200	FAD GT/DCT	2014 - 2015	FL	FR

EQUIVALENTS OEM

06435 MGE 006	06455 MGE 016

AD | S3 | S33 RACING

PART NUMBER

299

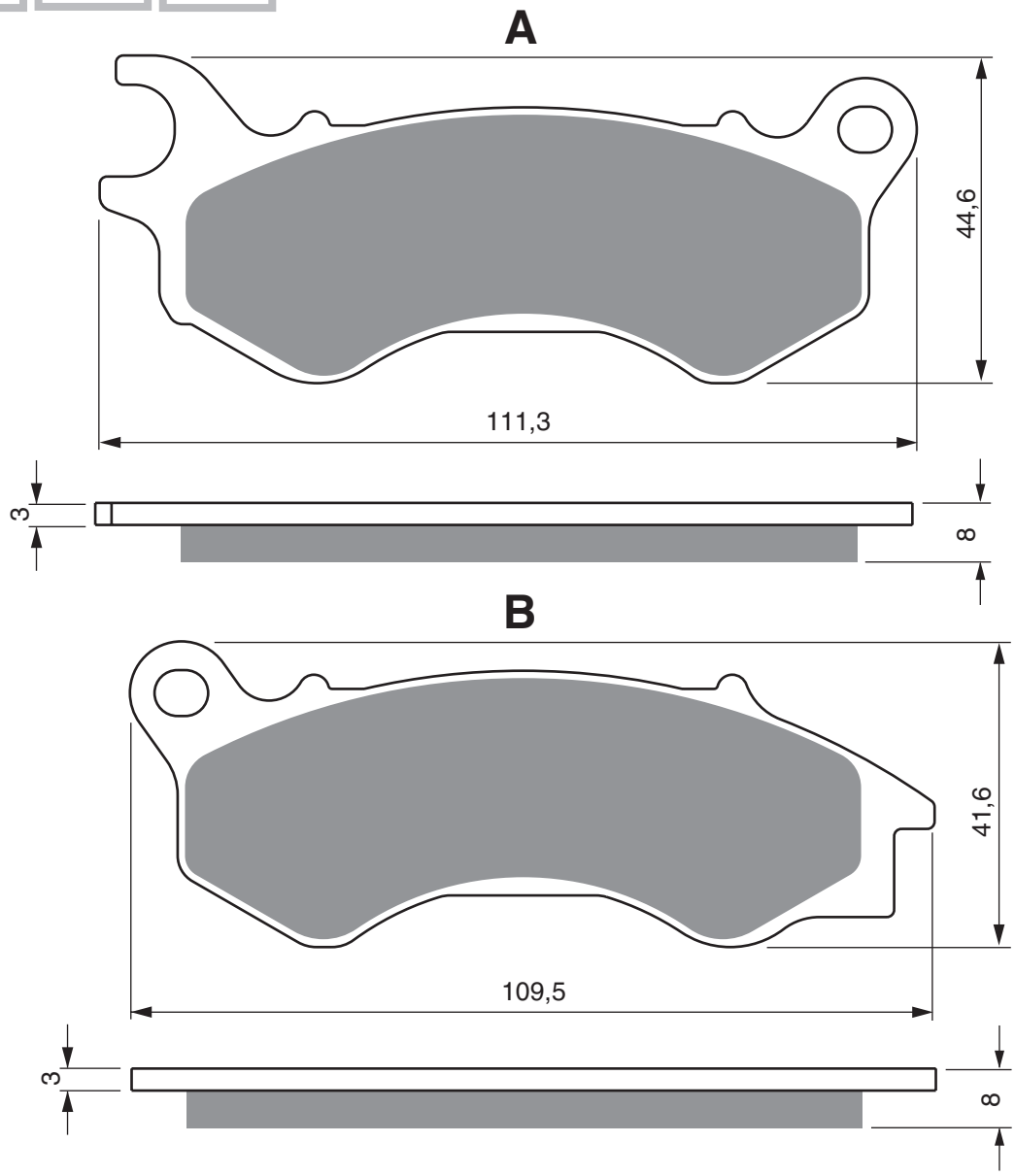

HONDA

NSC	50	AC Vision 50 (4T) MPDC/E/F/G/H/J (16" Wheels)	2012 - 2018	FL
NSC	50	C Vision 50 (4T) WHC/T2E/F (14" Wheels)	2012 - 2016	FL
NSC	50	R (14"whees)	2013 - 2016	FL
NSC	110	MPDC/E Vision (16" wheel)	2012 - 2014	FL
NSC	110	WHB/E Vision 110 (14" Wheels)	2011 - 2016	FL
SCV	110	(NHX 110 WHA) (4 bolt lead disc fixing)	2010 - 2012	FL
PCX	125	(WW 125 EX2 C/D/F/H/J)	2012 - 2018	FL
SH	125	i Mode (ANC 125E)	2014 - 2018	FL
PCX	150	(ABS)	2018 - 2020	FL
PCX	150	(WW 150 EX2 C/D/F/H/J)	2012 - 2020	FL

KYMCO

	125	People One	2016 - 2019	FL

LEXMOTO

		Michigan (ZS125-79-E4)	2013 - 2020	FL
	125	Adrenaline EFi (XFLM125GY-2B-E4)	2015 - 2018	FL
	125	Matador EFi (ZS125T-40-E4)	2013 - 2017	FL

PEUGEOT

	50	Django Allure (2T/4T)	2014 - 2018	FL
	50	Django Evasion (2T)	2014 - 2020	FL
	50	Django Evasion (4T)	2014 - 2018	FL
	50	Django S (2T)	2014 - 2018	FL
	50	Django S (4T)	2014 - 2018	FL
	50	Django Sport (2T)	2014 - 2020	FL
	50	Django Sport (4T)	2014 - 2018	FL
	125	Django Allure (4T / 190mm Rear Disc)	2014 - 2020	FL
	125	Django Allure SBC (4T /190mm Rear Disc)	2014 - 2020	FL
	125	Django Evasion (4T/ 190mm Rear Disc)	2014 - 2020	FL
	125	Django Evasion SBC (4T/ 190mm Rear Disc)	2014 - 2020	FL
	125	Django Heritage SBC (4T/190mm Rear Disc)	2014 - 2020	FL
	125	Django S (4T/190mm Rear Disc)	2014 - 2020	FL
	125	Django Sport (4T/ 190mm Rear Disc)	2014 - 2020	FL
	125	Django Sport SBC (4T/190mm Rear Disc)	2014 - 2020	FL
	125	Satelis	2013 - 2013	FL
	125	Speedfight 4 (4T)	2017 - 2018	FL
	150	Django Allure (4T/ 190mm Rear Disc)	2014 - 2018	FL
	150	Django Evasion (4T/190mm Rear Disc)	2014 - 2019	FL
	150	Django S (4T / 190mm Rear Disc)	2014 - 2020	FL
	150	Django Sport (4T/ 190mm Rear Disc)	2014 - 2019	FL

EQUIVALENTS OEM

06455 KWN 641	06455 GFM D31	06455 KZL 861	PE8033443

PART NUMBER

300

AD	K1	K5	S3	S33 RACING

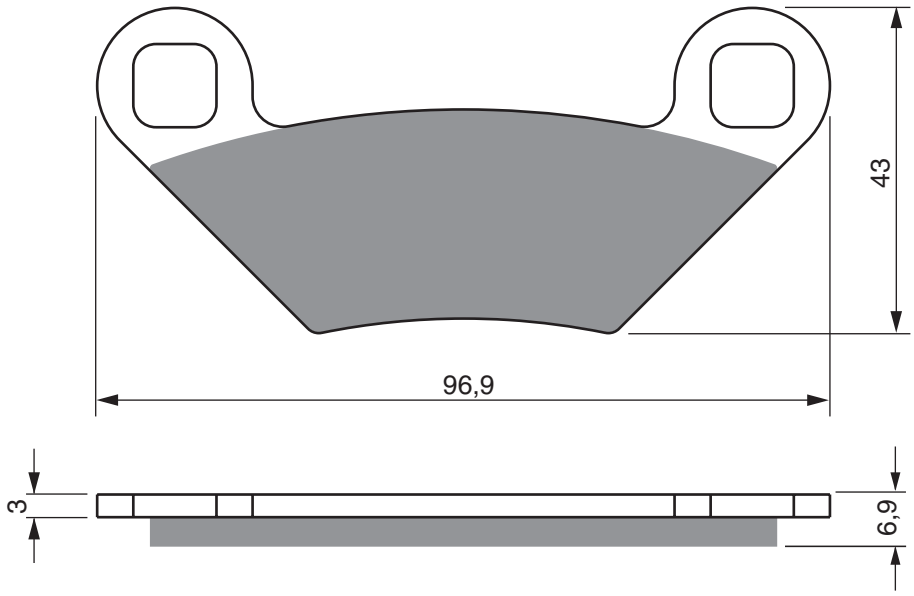

POLARIS

325	2x4 Hawkeye	2015 - 2015	RR		
400	Hawkeye H0 (2x4)	2011 - 2014	RR		
400	Sportsman H0 (4x4)	2011 - 2014	RR		
500	Sportsman H0 (After 16/12/2008)	2009 - 2012	RR		
500	XP Sportsman	2009 - 2009	FL	FR	RR
550	Sportsman	2011 - 2013	FL	FR	RR
550	Sportsman EPS	2010 - 2014	FL	FR	RR
550	Sportsman Forest	2010 - 2010	FL	FR	RR
550	Sportsman Touring EPS	2010 - 2014	FL	FR	RR
550	Sportsman X2	2010 - 2014	FL	FR	RR
550	Sportsman XP Touring EPS	2012 - 2012	FL	FR	RR
550	X2 Sportsman	2010 - 2014	FL	FR	RR
550	XP Sportsman	2009 - 2013	FL	FR	RR
550	XP Sportsman EPS	2009 - 2014	FL	FR	RR
570	Forest Tractor EFi/EPS	2015 - 2015	RR		
570	Sportsman 6x6	2017 - 2018	RR		
570	Sportsman 6x6 Tractor	2017 - 2018	RR		
570	Sportsman EFI (Inc EPS)	2011 - 2015	RR		
570	Sportsman EFi HD	2014 - 2018	RR		
570	Sportsman EFi UTE	2014 - 2018	RR		
570	Sportsman EFi X2 EPS	2014 - 2018	RR		
570	Sportsman SP	2015 - 2018	RR		
570	Sportsman SP Touring	2015 - 2018	RR		
570	Sportsman Touring EFi EPS	2014 - 2015	RR		
570	Sportsman Touring Tractor EFi EPS	2016 - 2018	RR		
800	Sportsman	2012 - 2014	FL	FR	RR
800	Sportsman EFI	2010 - 2013	RR		
800	Sportsman H0/EFi (After 16/12/2008)	2009 - 2009	RR		
850	Forest	2015 - 2015	FL	FR	RR
850	Scrambler	2013 - 2018	FL	FR	RR
850	Sportsman Forest	2012 - 2015	FL	FR	RR
850	Sportsman SP	2015 - 2018	FL	FR	RR
850	Sportsman Touring EPS	2010 - 2014	FL	FR	RR
850	Sportsman Touring H0 EPS	2013 - 2015	FL	FR	RR
850	Sportsman Touring SP	2015 - 2018	FL	FR	RR
850	Sportsman XP Touring EPS	2012 - 2012	FL	FR	RR
850	XP Sportsman	2009 - 2015	FL	FR	RR
850	XP Sportsman EPS	2009 - 2014	FL	FR	RR
1 000	Forest	2015 - 2015	FL	FR	RR
1 000	Scrambler	2014 - 2018	FL	FR	RR
1 000	Scrambler XP	2014 - 2018	FL	FR	RR
1 000	Sportsman MD/XP	2015 - 2018	FL	FR	RR
1 000	Sportsman Touring	2015 - 2018	FL	FR	RR
1 000	Sportsman Touring Tractor	2016 - 2018	FL	FR	RR
1 000	Sportsman XP Tractor	2016 - 2018	FL	FR	RR
XP 1 000	Scrambler	2020 - 2020	FL	FR	RR

EQUIVALENTS OEM

2203628	2204088	2205606

S33 RACING | GP5 | GP6 | GP7 | GPR

PART NUMBER

301

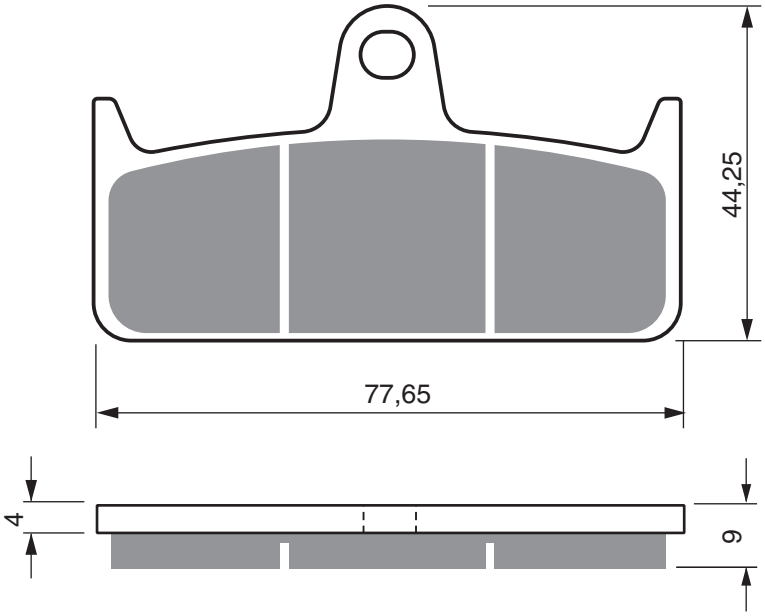

GOLDFREN

CP005 4 Piston monoblock caliper	2011 -	FL

PART NUMBER

302

AD	S3	S33 RACING

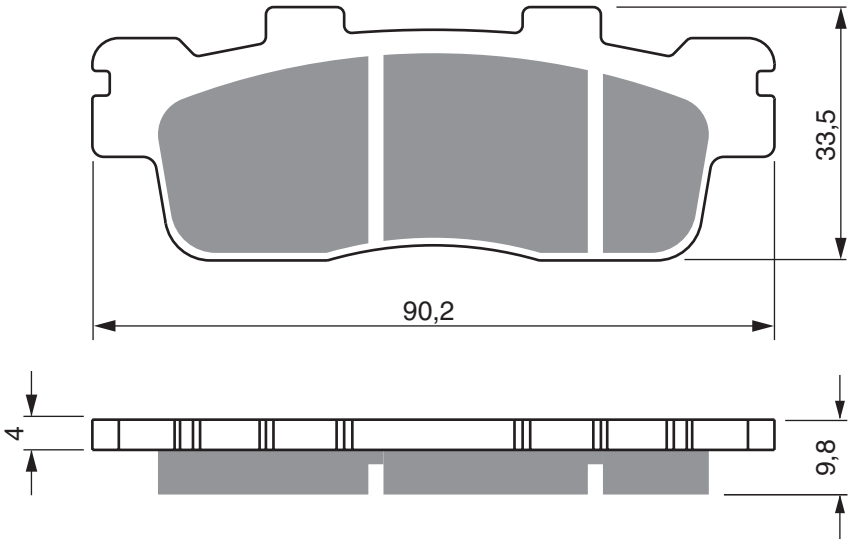

BENELLI				
	125	Velvet (Touring)	2008 - 2012	RR
	150	Velvet (Touring)	2008 - 2012	RR
KAWASAKI				
J	125	ABS (SC125 AGF/BGF/CGF/CHF/CJF)	2016 - 2021	RR
J	125	SE/ABS (SC125 AGFA/BGFA/CGFA/CHFA/CJFA)	2016 - 2018	RR
J	300	AEF/AFF/AGF (Non ABS)	2014 - 2016	RR
J	300	AEFA/AFFA Special Edition (Non ABS)	2014 - 2016	RR
J	300	BEF/BFF/BGF/CHF/CJF (ABS Model)	2014 - 2021	RR
J	300	BEFA/BFFA/BGFA/CHFA/CJFA Special Edition (ABS Model)	2014 - 2021	RR
KYMCO				
	125	i Downtown (C21000)	2009 - 2015	RR
	125	i Super Dink (C21000)	2009 - 2015	RR
	200	i Downtown	2010 - 2015	RR
	300	i Downtown (V20000)	2009 - 2012	RR
	300	i Downtown (ABS/C20010)	2010 - 2015	RR
	300	Super Dink i (V20000)	2009 - 2012	RR

EQUIVALENTS OEM

43105 LEA7 305	430 82 Y008	43082 Y006

AD	K5	S3	S33 RACING

PART NUMBER

303

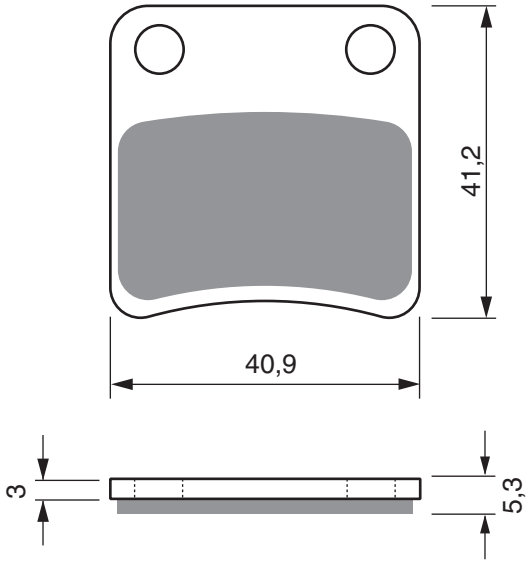

APRILIA

	850	Mana (ABS)	2008 - 2013	PB
	850	Mana (Non ABS)	2008 - 2011	PB
	850	Mana GT (ABS Model)	2009 - 2016	PB
SRV	850		2012 - 2014	PB

BMW

C		Evolution (Scooter)	2014 - 2018	PB
C	600	Sport Evolution Scooter	2014 - 2020	PB
C	600	Sport Highline	2013 - 2015	PB
C	600	Sport Scooter	2012 - 2015	PB
C	650	GT Highline	2013 - 2018	PB
C	650	GT Scooter	2012 - 2018	PB
C	650	Sport Scooter	2016 - 2020	PB

GILERA

	500	Fuoco LT (4V/4T)	2013 - 2015	PB
	500	Fuoco RC/ie	2007 - 2013	PB
GP	800		2008 - 2014	PB

HONDA

FJS	400	A9/D9	2009 - 2009	PB
FJS	400	D6/D7/D8 Silverwing (Non ABS 256mm front disc)	2006 - 2008	PB
SW-T	400	(FJS 400 A9/AB) ABS	2009 - 2016	PB
SW-T	400	(FJS 400 D9)	2009 - 2009	PB
FJS	600	1/2/B3/B4/D5/D6/D7/D8 Silverwing	2001 - 2008	PB
SW-T	600	(FJS 600 AB) (ABS Model)	2011 - 2016	PB
DN-01	680	(NSA 700 A8/A9)	2008 - 2011	PB
CTX	700	DE-DCT	2014 - 2019	PB
CTX	700	N-DCT	2014 - 2019	PB
NC	700	DC Integra Scooter	2012 - 2014	PB
NC	700	SD (ABS/DCT)	2012 - 2014	PB
NC	700	XA (ABS)	2012 - 2013	PB
NC	700	XD (ABS/DCT)	2012 - 2014	PB
ADV	750	H (X-ADV DCT)	2017 - 2018	PB
NC	750	D Integra Scooter DCT	2014 - 2015	PB
NC	750	S (Non ABS)	2014 - 2015	PB
NC	750	S DCT (ABS)	2014 - 2018	PB
NC	750	X DCT (ABS)	2014 - 2018	PB
NM4	750	Vultus (NC750J)	2015 - 2019	PB
CRF	1 000	Africa Twin ABS DCT	2016 - 2020	PB
VFR	1 200	FAD DCT	2010 - 2017	PB
VFR	1 200	FAD GT/DCT	2014 - 2015	PB
VFR	1 200	XDC/XDCD/XDE/XDF/XDG/XDH/XDJ DCT Crosstourer	2012 - 2018	PB
GL	1 800	D Goldwing Tour J (DCT)	2018 - 2020	PB
GL	1 800	DA Goldwing Tour Airbag J (DCT)	2018 - 2020	PB
GL	1 800	J Goldwing (DCT)	2018 - 2020	PB

KYMCO

	400	Maxxer	2009 - 2010	PB
MXU	400	(A40000)	2008 - 2011	PB
	450	Maxxer i (4T)	2010 - 2015	PB

PIAGGIO VESPA

MP3	125	Hybrid	2009 - 2012	PB
MP3	125	ie (EFi Models)	2008 - 2011	PB
MP3	250	(EFI) (12" Rear Wheel)	2006 - 2008	PB
MP3	250	LT (EFi) (14" Rear Wheel)	2009 - 2009	PB
MP3	300	Business LT 300 ie ABS (13" Front Wheel/ 14" Rear Wheel)	2014 - 2018	PB
MP3	300	Business LT ie	2013 - 2013	PB
MP3	300	ie (Hybrid LT)	2011 - 2013	PB
MP3	300	ie (Hybrid)	2011 - 2015	PB
MP3	300	ie Yourban Sport LT	2011 - 2016	PB
MP3	300	LT (EFi)	2010 - 2011	PB
MP3	300	Sport LT 300 ie ABS (13" Front Wheel/ 14" Rear Wheel)	2014 - 2018	PB
MP3	300	Sport LT ie	2013 - 2013	PB
MP3	300	Touring ie	2011 - 2012	PB
MP3	300	Touring LT ie	2011 - 2012	PB
MP3	300	Yourban LT ie	2011 - 2016	PB
MP3	300	Yourban LT RL	2017 - 2018	PB
MP3	300	Yourban Sport ie	2011 - 2016	PB
X10	350	ie (4V/4T/EFi)	2012 - 2015	PB
MP3	400	ie	2007 - 2010	PB
MP3	400	LT ie	2009 - 2010	PB
MP3	400	Touring ie	2011 - 2012	PB
MP3	400	Touring LT ie	2011 - 2012	PB
MP3	500	EFi	2009 - 2010	PB
MP3	500	LT Business	2011 - 2015	PB
MP3	500	LT Business ABS (13" Front Wheel/14" Rear Wheel))	2014 - 2020	PB
MP3	500	LT Sport	2011 - 2015	PB
MP3	500	LT Sport ABS (13" Front Wheel/14" Rear Wheel)	2014 - 2018	PB
MP3	500	Touring Business ie	2011 - 2012	PB
MP3	500	Touring Sport ie	2011 - 2012	PB
X10	500	ie (4V/4T/EFi)	2012 - 2015	PB

STOMP MINI MOTO

KZ	140	F		RR
KZR	140	F		RR
Z	140	F		RR

VECTRIX

VX-3		Li+ (3 wheeler model)	2012 - 2013	PB

EQUIVALENTS OEM

06436 MCT 006	648476	649830	668541	890490

PART NUMBER

304

AD	S3	S33 RACING	GP5	GP6	GP7

1 set = 4 pcs

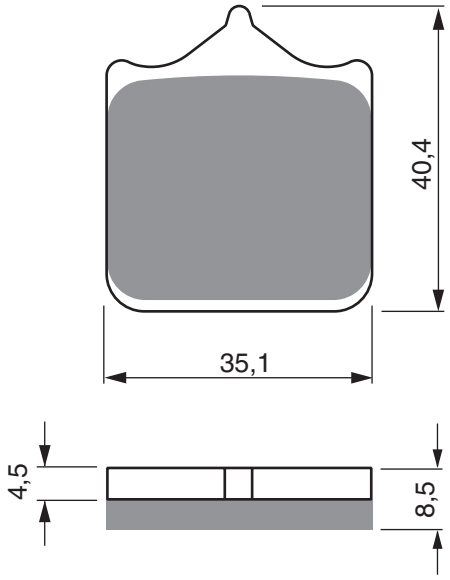

ATTENTION:

For BMW S1000RR always use GOLDfren brake 304 with 4,5 mm thick baking plate.

Never use GOLDfren brake 177 with backing plate 3.00 mm thick.

BMW					
S	1 000	R Naked (K47)	2014 - 2018	FL	FR
S	1 000	R/RR (Models Fitted with Forged Race Wheels - 7 Spoke Type)	2010 - 2018	FL	FR
S	1 000	RR (K46) (Disc Has fixed bobbins)	2010 - 2018	FL	FR
TRIUMPH					
	765	Daytona Moto 2	2020 - 2020	FL	FR
	1 050	Speed Triple (4 Pad Brembo F/Caliper /255mm R/Disc/ ABS) - From VIN461332	2011 - 2016	FL	FR
	1 050	Speed Triple (4 Pad Brembo F/Caliper /255mm R/Disc/Non ABS) - From VIN 461332	2011 - 2016	FL	FR
	1 200	Bonneville Speed Twin (Liquid Cooled)	2019 - 2020	FL	FR

EQUIVALENTS OEM

34 11 7 714 800	T2025247	T2025290

AD | S3 | S33 RACING

PART NUMBER

305

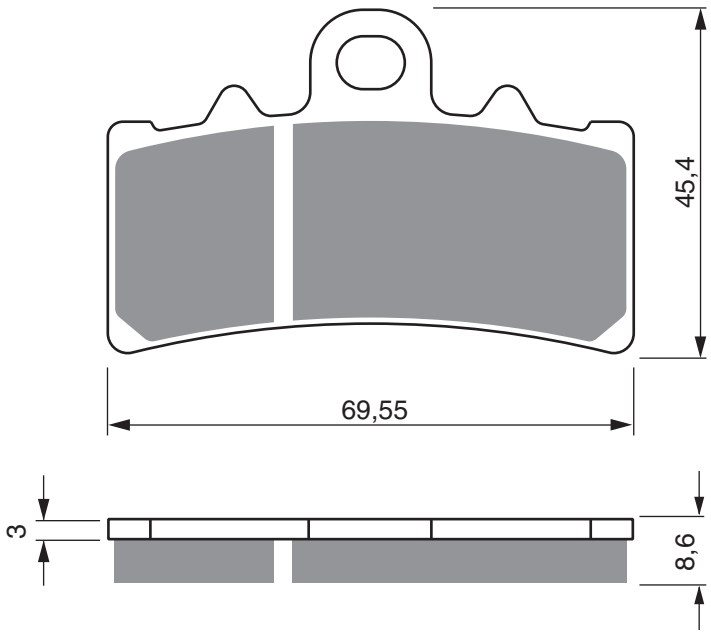

BMW

G	310	GS	2017 - 2021	FL
G	310	GS Edition 40	2020 - 2021	FL
G	310	R	2017 - 2021	FL
C	400	GT	2018 - 2020	FL
C	400	X	2018 - 2020	FL

HUSQVARNA

	125	Vitpilen (4T)	2021 - 2021	FL
	401	Svartpilen (4T)	2018 - 2020	FL
	401	Vitpilen (4T)	2018 - 2020	FL

KTM

	125	Duke (4T)	2011 - 2018	FL
RC	125		2014 - 2019	FL
	200	Duke (4T)	2012 - 2015	FL
RC	200		2014 - 2015	FL
	250	Duke	2015 - 2020	FL
	390	Adventure	2019 - 2020	FL
	390	Duke (300mm F/Disc)	2013 - 2017	FL
	390	Duke (320mm F/Disc)	2018 - 2020	FL
	390	Duke (4T)	2015 - 2015	FL
RC	390		2014 - 2016	FL
RC	390		2017 - 2020	FL

EQUIVALENTS OEM

901-13-030-000

PART NUMBER

306

AD | S3 | S33 RACING

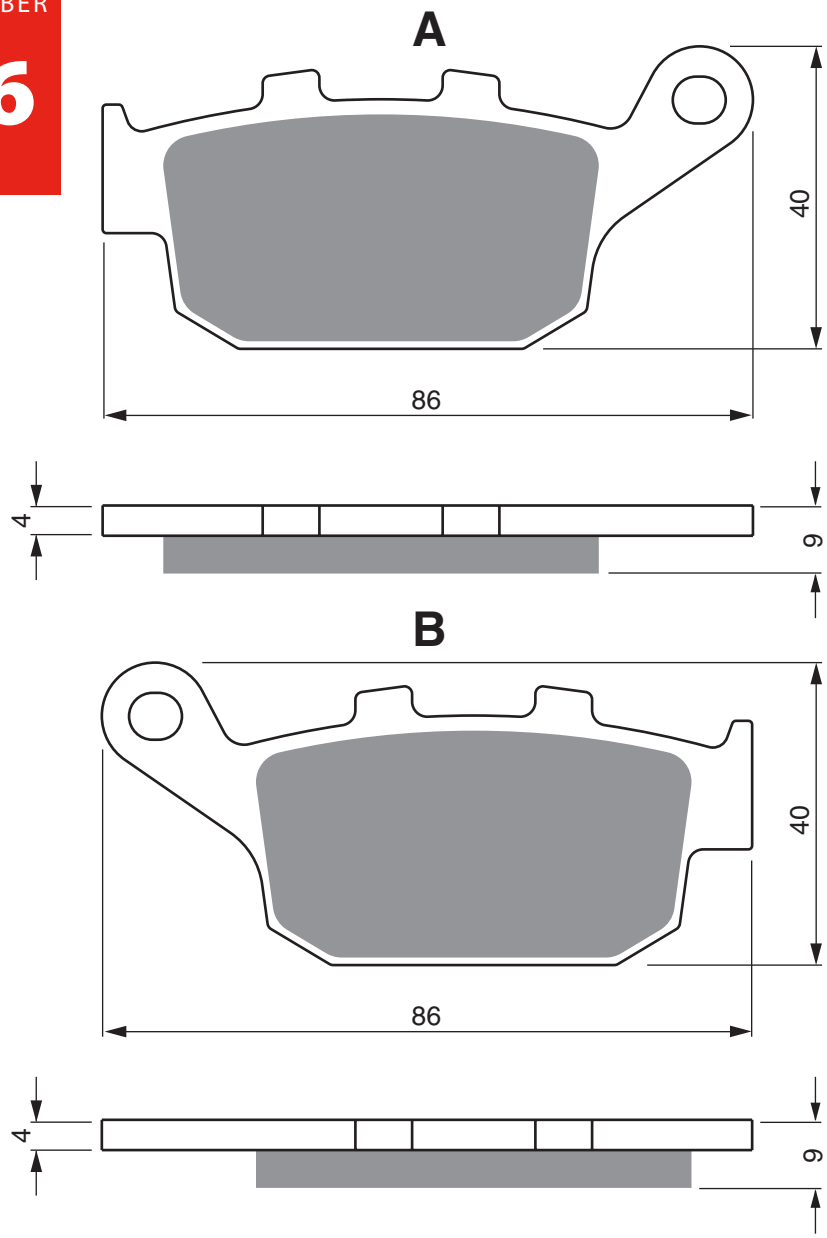

HONDA

CBR	250	RAB/RAC (ABS)	2011 - 2013	RR
CBR	250	RB/RC (Non ABS)	2011 - 2013	RR
CB	300	F AC (ABS)	2015 - 2017	RR
CB	300	FA AC (ABS)	2018 - 2020	RR
CB	300	R AC	2018 - 2021	RR
CBR	300	R (Non ABS)	2018 - 2020	RR
CBR	300	RA (ABS)	2014 - 2021	RR
CMX	300	Rebel	2018 - 2020	RR
CMX	300	Rebel (ABS)	2018 - 2020	RR
CBR	400	RRL/RRN/RRR (NC29) Gull-Arm	1990 - 1994	RR
CB	500	F (Non ABS)	2013 - 2020	RR
CB	500	FA (ABS)	2013 - 2020	RR
CB	500	FD/FE/FF (Non ABS)	2013 - 2020	RR
CMX	500	REBEL (ABS)	2018 - 2020	RR
CMX	500	REBEL (Non ABS)	2018 - 2020	RR
CB	650	F (ABS)	2014 - 2020	RR
CB	650	FE/FG	2014 - 2016	RR
CB	650	R AC	2019 - 2021	RR
CB	650	RA AC	2019 - 2020	RR
CBR	650	F (Non ABS)	2014 - 2020	RR
CBR	650	FA (ABS)	2014 - 2020	RR
CBR	650	R 2AC	2018 - 2020	RR
CBR	650	RA 2AC	2018 - 2020	RR
ADV	750	H (X-ADV DCT)	2017 - 2021	RR
NC	750	D Integra Scooter DCT	2014 - 2015	RR
NC	750	S (ABS)	2014 - 2018	RR
NC	750	S (Non ABS)	2014 - 2015	RR
NC	750	S DCT (ABS)	2014 - 2018	RR
NC	750	X (ABS)	2014 - 2021	RR
NC	750	X (Non ABS)	2014 - 2015	RR
NC	750	X DCT (ABS)	2014 - 2021	RR

SINNIS

RSX	125		2019 - 2020	RR

SUZUKI

DL	250	V- Strom AL8/AL9 (ABS)	2018 - 2021	RR
GSX	250	RL7/RL8	2017 - 2018	RR
GW	250	FL5 Inazuma	2015 - 2015	RR
GW	250	L3 Inazuma	2013 - 2013	RR
SFV	650	AK9/AL0/AL1/AL2/AL3/AL4/AL5 (ABS)	2009 - 2015	RR
SFV	650	K9/L0/L1/L2/L3/L4/L5 Gladius	2009 - 2015	RR
SV	650	AL7/AL8/AL9 (ABS)	2016 - 2021	RR
SV	650	X AL8/AL9 (ABS)	2018 - 2021	RR

EQUIVALENTS OEM

69101 44850	06435 KYJ 901	69100 48820	06435 MOZ JO1	06435 MGS D31	06435 MGZ J01

AD	K1	K5	K5-LX	S3	S33 RACING

PART NUMBER

307

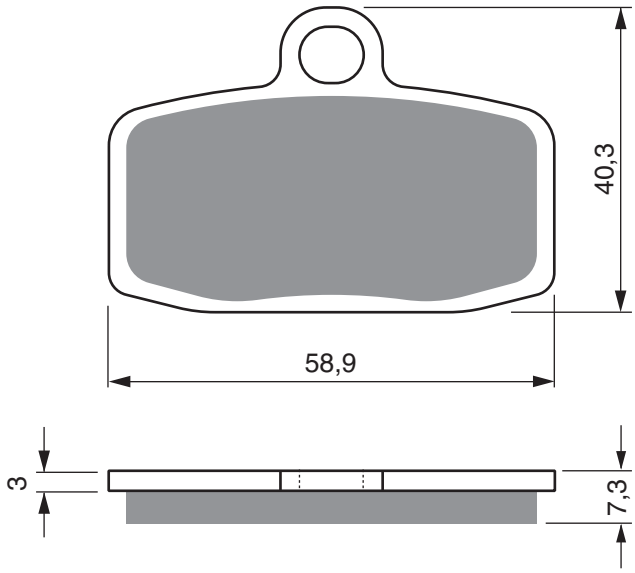

GAS GAS				
TXT	125	(For models with Formula front caliper/single pin pad fixing)	2012 - 2014	FL
TXT	250	(For models with Formula front caliper/single pin pad fixing)	2012 - 2014	FL
TXT	280	(For models with Formula front caliper/single pin pad fixing)	2012 - 2014	FL
TXT	300	(For models with Formula front caliper/single pin pad fixing)	2012 - 2014	FL
HUSQVARNA				
TC	85	(2T) (17"/14" wheels)	2014 - 2020	FL
TC	85	(2T) (19"/16" wheels)	2014 - 2020	FL
KTM				
E-SM		Freeride	2015 - 2017	FL
E-SX		Freeride	2014 - 2017	FL
E-XC		Freeride	2015 - 2020	FL
SX	85	(17"/14" wheels - 220mm F/Disc/Radial Caliper)	2012 - 2015	FL
SX	85	(17"/14" wheels - 240mm F/Disc/Radial Caliper)	2016 - 2020	FL
SX	85	(19"/16" wheels - 220 F/Disc/Radial Caliper)	2012 - 2012	FL
SX	85	(19"/16" wheels - 240mm F/Disc Caliper)	2013 - 2020	FL
	250	Freeride (2T)	2014 - 2017	FL
	350	Freeride (4T)	2012 - 2017	FL

EQUIVALENTS OEM

470 13 030 000	BT 6000063012	4252

PART NUMBER

308

AD	K5	S3	S33 RACING

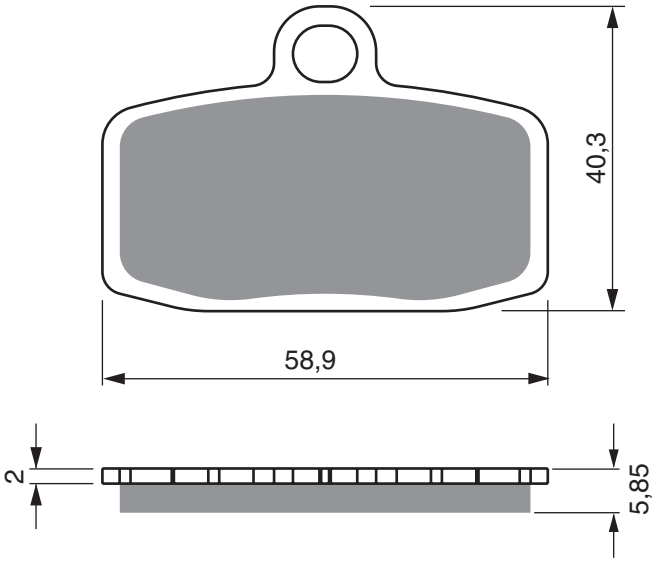

JOTAGAS

JTG		JT	2012 - 2012	FL

SHERCO

ST	80	2T (Formula caliper)	2013 - 2014	FL
ST	125	2T (Formula caliper)	2013 - 2014	FL
ST	250	2T (Formula caliper)	2013 - 2014	FL
ST	290	2T (Formula caliper)	2013 - 2014	FL
ST	290	Cabastany Replica (2T/Formula Caliper)	2012 - 2012	FL
ST	305	2T (Formula caliper)	2013 - 2014	FL

EQUIVALENTS OEM

470 13 030 000	BT 60000 63012	4252

AD	K1	K5	S3	S33 RACING

PART NUMBER

309

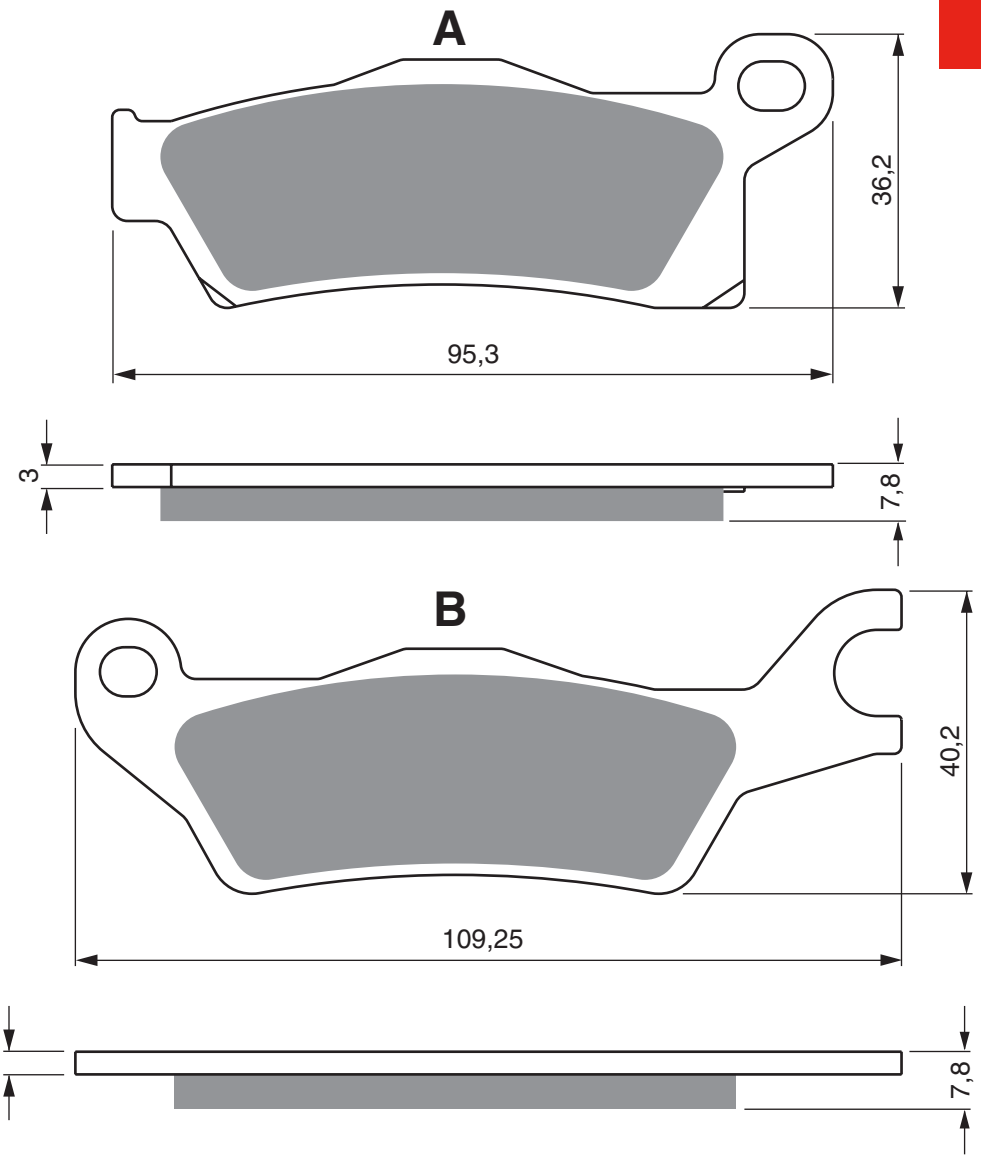

CAN-AM

	Outlander 6x6 inc Max and T3	2019 - 2019	FL	RL
450	Outlander EFI, inc MAX and T3	2018 - 2019	FL	RL
500	Outlander 4x4 (DPS)	2013 - 2014	FL	
500	Outlander 4x4 (XT)	2013 - 2014	FL	RL
500	Outlander L EFI STD inc Max	2013 - 2015	FL	RL
500	Outlander Max 4x4 (DPS)	2013 - 2014	FL	
500	Outlander Max EFI (XT)	2013 - 2015	FL	
500	Renegade (STD)	2012 - 2015	FL	
570	Outlander MAX EFI T3 PRO inc DPS XT	2018 - 2019	FL	RL
570	Outlander MAX Pro	2017 - 2017	FL	
570	Outlander T3 EFI inc (3FJD)	2018 - 2018	FL	RL
570	Renegade EFI	2019 - 2019	FL	RL
650	Outlander 4x4 (DPS/XT/STD)	2013 - 2015	FL	RL
650	Outlander Max 4x4 (STD/DPS/AX)	2013 - 2014	FL	
650	Outlander MAX 6x6 EFI T3	2019 - 2019	FL	RL
650	Outlander MAX EFI T3 PRo inc DPS XT	2018 - 2019	FL	RL
650	Outlander MAX Pro	2017 - 2017	FL	RL
650	Outlander T3 EFI inc	2018 - 2018	FL	RL
650	Renegade EFI T3	2019 - 2019	FL	RL
800	Outlander Max R 4x4 (DPS/XT/XT-P)	2013 - 2014	FL	
800	Outlander R 4x4 (DPS)	2013 - 2014	FL	
800	Outlander R STD	2012 - 2015	FL	
800	Outlander R XT	2012 - 2013	FL	
800	Renegade R STD	2012 - 2015	FL	
800	Renegade R XXC	2012 - 2014	FL	RL
850	Outlander EFI	2018 - 2018	FL	
850	Outlander MAX	2017 - 2017	FL	
850	Renegade EFI	2019 - 2019	FL	RL
1 000	Commander Max DPS/XT	2014 - 2017	RL	
1 000	Outlander 4x4 (DPS/XT/XT-P/LTD/STD)	2013 - 2014	FL	
1 000	Outlander 4x4 (LTD)	2013 - 2013	FL	
1 000	Outlander 4x4 (XMR)	2013 - 2014	FL	RL
1 000	Outlander 6x6 EFI T3	2018 - 2019	FL	RL
1 000	Outlander EEFI T3 and R	2017 - 2019	FL	RL
1 000	Outlander Max 4x4 (DPS/XT/XT-P)	2013 - 2013	FL	
1 000	Outlander MAX EFI T3 L and R	2017 - 2019	FL	RL
1 000	Outlander STD	2012 - 2014	FL	RL
1 000	Outlander XT/XT-P	2012 - 2014	FL	RL
1 000	Renegade EFI T3 and R	2019 - 2019	FL	RL
1 000	Renegade STD	2012 - 2014	FL	RL
1 000	Renegade XXC	2012 - 2014	FL	RL

EQUIVALENTS OEM

705 601 015

PART NUMBER

310

AD	K1	K5	S3	S33 RACING

A

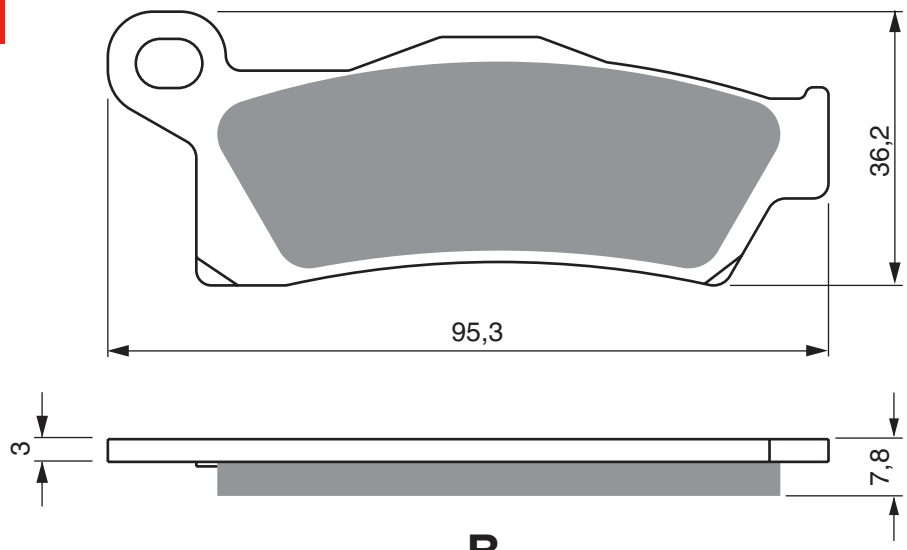

B

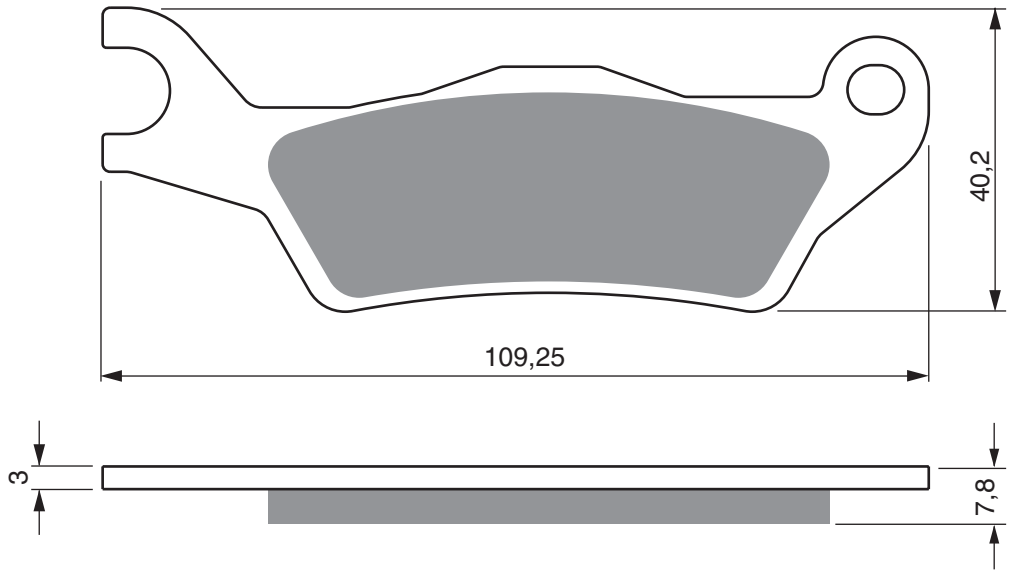

CAN-AM

	Outlander 6x6 inc Max and T3	2019 - 2019	FR	RR
450	Outlander EFI, inc MAX and T3	2018 - 2019	FR	RR
500	Outlander 4x4 (DPS)	2013 - 2014	FR	RR
500	Outlander 4x4 (XT)	2013 - 2014	FR	RR
500	Outlander L EFI STD inc Max	2013 - 2015	FR	RR
500	Outlander Max 4x4 (DPS)	2013 - 2014	FR	RR
500	Outlander Max EFI (XT)	2013 - 2015	FR	RR
500	Renegade (STD)	2012 - 2015	FR	RR
570	Outlander MAX EFI T3 PRO inc DPS XT	2018 - 2019	FR	RR
570	Outlander MAX Pro	2017 - 2017	FR	RR
570	Outlander T3 EFI inc (3FJD)	2018 - 2018	FR	RR
570	Renegade EFI	2019 - 2019	FR	RR
650	Outlander 4x4 (DPS/XT/STD)	2013 - 2015	FR	RR
650	Outlander Max 4x4 (STD/DPS/AX)	2013 - 2014	FR	RR
650	Outlander MAX 6x6 EFI T3	2019 - 2019	FR	RR
650	Outlander MAX EFI T3 PRo inc DPS XT	2018 - 2019	FR	RR
650	Outlander MAX Pro	2017 - 2017	FR	RR
650	Outlander T3 EFI inc	2018 - 2018	FR	RR
650	Renegade EFI T3	2019 - 2019	FR	RR
800	Outlander Max R 4x4 (DPS/XT/XT-P)	2013 - 2014	FR	RR
800	Outlander R 4x4 (DPS)	2013 - 2014	FR	RR
800	Outlander R STD	2012 - 2015	FR	RR
800	Outlander R XT	2012 - 2013	FR	RR
800	Renegade R STD	2012 - 2015	FR	RR
800	Renegade R XXC	2012 - 2014	FR	RR
850	Outlander EFI	2018 - 2018	FR	RR
850	Outlander MAX	2017 - 2017	FR	RR
850	Renegade EFI	2019 - 2019	FR	RR
1 000	Commander Max DPS/XT	2014 - 2017	RR	
1 000	Outlander 4x4 (DPS/XT/XT-P/LTD/STD)	2013 - 2014	FR	RR
1 000	Outlander 4x4 (LTD)	2013 - 2013	FR	RR
1 000	Outlander 4x4 (XMR)	2013 - 2014	FR	RR
1 000	Outlander 6x6 EFI T3	2018 - 2019	FR	RR
1 000	Outlander EEFI T3 and R	2017 - 2019	FR	RR
1 000	Outlander Max 4x4 (DPS/XT/XT-P)	2013 - 2013	FR	RR
1 000	Outlander MAX EFI T3 L and R	2017 - 2019	FR	RR
1 000	Outlander STD	2012 - 2014	FR	RR
1 000	Outlander XT/XT-P	2012 - 2014	FR	RR
1 000	Renegade EFI T3 and R	2019 - 2019	FR	RR
1 000	Renegade STD	2012 - 2014	FR	RR
1 000	Renegade XXC	2012 - 2014	FR	RR

EQUIVALENTS OEM

705 601 014

AD | S3 | S33 RACING

PART NUMBER

311

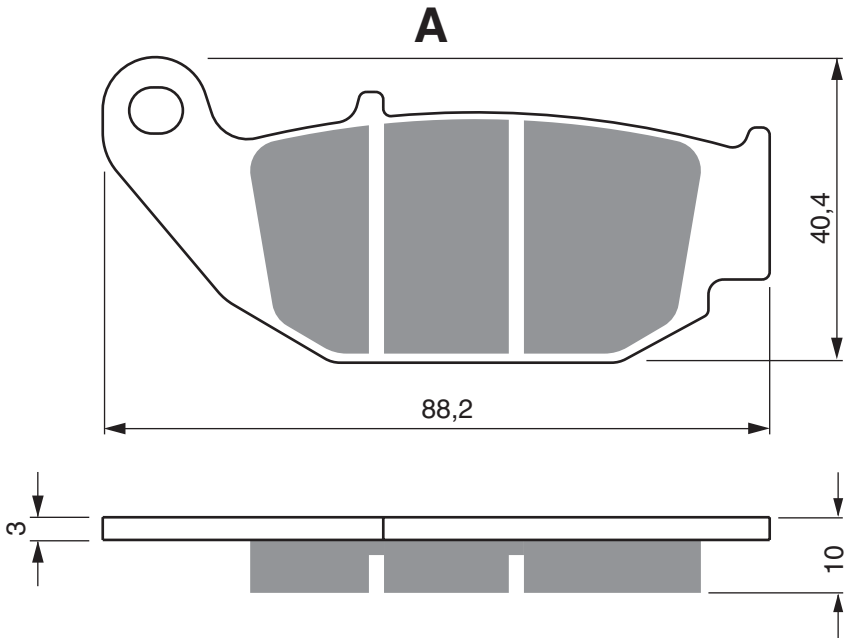

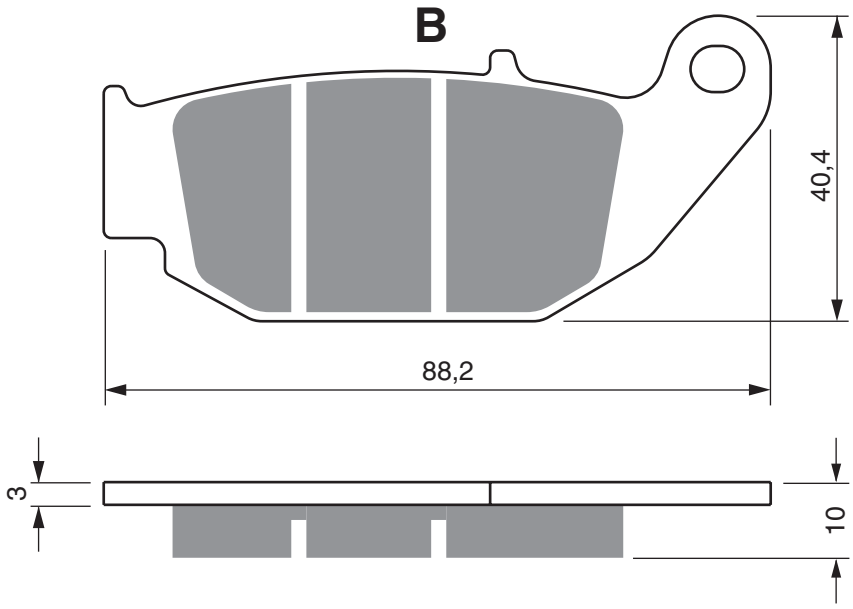

BENELLI

BN	125		2018 - 2020	RR
TNT	135	Tornado Naked T (135cc)	2017 - 2020	RR
TNT	135	Tornado Naked T (135cc)	2018 - 2018	RR
TNT	200	Tornado Naked T (200cc)	2017 - 2018	RR

HONDA

CB	125	F	2017 - 2020	RR
CB	125	R	2018 - 2020	RR
CBR	125	RWB/RC/RD/RF/RG (5 Bolt Front Disc)	2011 - 2016	RR
MSX	125	AG/AH Grom (ABS)	2018 - 2020	RR
MSX	125	D/E/F/G/H Grom (Non ABS)	2013 - 2020	RR
CBF	150	MB/MC Unicorn (Cast Wheels)	2011 - 2012	RR
CRF	250	L (ABS)	2017 - 2021	RR
CRF	250	LD/LH	2013 - 2020	RR
CRF	250	ME Supermoto	2014 - 2016	RR
CRF	250	Rally (CRF 250 RL Rally Non ABS)	2017 - 2020	RR
CRF	250	Rally (CRF 250 RLA Rally ABS)	2017 - 2021	RR
CRF	300	L (ABS)	2020 - 2021	RR
CRF	300	Rally ABS	2020 - 2021	RR

SUZUKI

GSX-R	125	RLXL8/RLL8	2018 - 2020	RR
GSX-S	125	MLXL8/MLL8	2018 - 2020	RR
GSX-R	150	FRFAL7/FRZAL7	2017 - 2020	RR
GSX-R	150	RF-Q/RFX-Q	2017 - 2020	RR
GSX-R	150	RFL8/RFXL8/RFXL9	2018 - 2020	RR
GSX-S	150	MFL8/MFXL8/MFXL9	2018 - 2020	RR

EQUIVALENTS OEM

06435 KZZ 901	0635 K26 921	610164810	6910034890	06435 K98 E01

PART NUMBER

312

AD	K1	K5	S3	S33 RACING

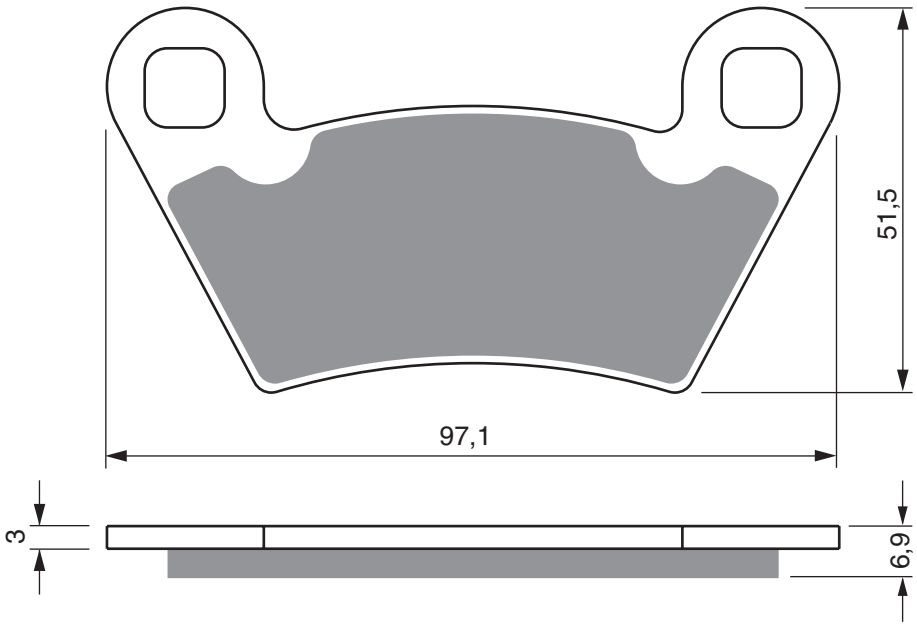

POLARIS

		Ranger 2x4/4x4	2002 - 2005	FL	FR	RR
		Ranger 48v EV	2013 - 2013	RR		
		Ranger 6x6	2004 - 2005	FL	FR	
		Ranger Series 10 "500 6x6"		FL	FR	RR
		Ranger Series 11		FL	FR	RR
		Ranger TM	2004 - 2005	FL	FR	RR
		Ranger TM	2006 - 2006	FL	FR	RR
		Ranger XP	2005 - 2005	FL	FR	RR
EV		Ranger (Electric)	2010 - 2014	RR		
PPS		/UTV/Series 10 2x4		FL	FR	RR
PPS		Series 11 2x4/4x4		FL	FR	RR
PPS		Series 11 6x6		FL	FR	RR
PPS		UTV/Series 10 4x6		FL	FR	RR
UTV		2x4 (Utility task vehicle series 10)	2003 - 2003	FL	FR	RR
	325	Ranger ETX	2015 - 2016	FL	FR	RR
	325	Sportsman Ace	2014 - 2014	RR		
	325	Sportsman Ace EFi	2015 - 2015	RR		
	325	Sportsman Ace Euro	2014 - 2015	RR		
	325	Sportsman Ace HD	2015 - 2015	RR		
	400	Ranger	2010 - 2014	RL	RR	
	500	Ranger (Carb) 2x4	2009 - 2009	RL	RR	
	500	Ranger (EFi) 4x4 HO	2009 - 2011	RL	RR	
	500	Ranger 4x4	2006 - 2007	FL	FR	RR
	500	Ranger 4x4 EFi	2006 - 2007	FL	FR	RR
	500	Ranger 4x4 EFi	2008 - 2008	RL	RR	
	500	Ranger 4x4 EFi	2011 - 2013	FL	FR	RR
	500	Ranger Series 10 6x6		FL	FR	RR
	500	Sportsman Touring H.O.	2011 - 2013	RL	RR	
	570	Ranger Crew	2014 - 2015	RR		
	570	Sportsman Ace	2015 - 2020	RR		
	570	Sportsman Ace Euro	2015 - 2020	RR		
	700	Ranger 4x4 EFi	2009 - 2009	RL	RR	
	700	Ranger 4x4 EFi/LE	2007 - 2007	FL	FR	RR
	700	Ranger 6x4 EFi	2008 - 2008	RL	RR	
	700	Ranger 6x6 EFi	2006 - 2009	FL	FR	RR
XP	700	Ranger 4x4	2006 - 2006	FL	FR	RR
XP	700	Ranger 4x4	2008 - 2008	RL	RR	
	800	Ranger 6x6	2010 - 2014	RL	RR	
	800	Ranger HD	2010 - 2011	RL	RR	
	800	Ranger TM	2006 - 2006	FL	FR	RR
	800	Ranger XP	2010 - 2012	RL	RR	
RZR-4	800	Ranger	2010 - 2014	RL	RR	
RZR-4	800	Ranger EPS	2012 - 2012	RL	RR	
RZR	900	Brutus	2013 - 2017	RL	RR	
RZR	900	Ranger XP	2011 - 2011	RR		
RZR	900	Ranger XP White Lightning LE	2011 - 2011	RL	RR	
	1 000	Ranger Diesel	2015 - 2015	RR		
	1 000	Ranger Diesel Crew	2015 2015	RR		
PPS	1 500	Series II UTV 2x4		FL	FR	RR

EQUIVALENTS OEM

1910514	2202413	2202097	1911228

AD	K1	K5	S3	S33 RACING

PART NUMBER

313

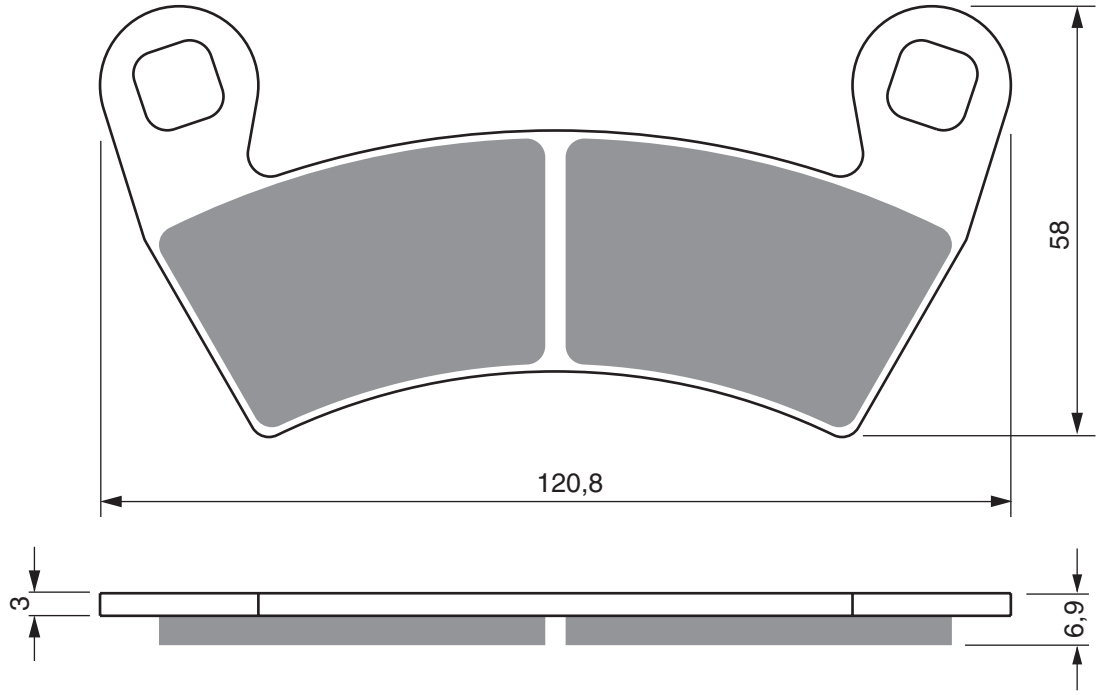

POLARIS

		Ranger 48v EV	2013 - 2013	FL	FR	
EV		Ranger (Electric)	2010 - 2014	FL	FR	
RZR		XP 4 Turbo	2016 - 2016	RL	FR	
RZR		XP Turbo	2016 - 2016	RL	FR	
	325	Sportsman Ace	2014 - 2014	FL	FR	
	325	Sportsman Ace EFi	2015 - 2015	FL	FR	
	325	Sportsman Ace Euro	2014 - 2015	FL	FR	
	325	Sportsman Ace HD	2015 - 2015	FL	FR	
	400	Ranger	2010 - 2014	FL	FR	
	500	Ranger (Carb) 2x4	2009 - 2009	FL	FR	
	500	Ranger (EFi) 4x4 HO	2009 - 2011	FL	FR	
	500	Ranger 4x4 EFi	2008 - 2008	FL	FR	
	570	Sportsman Ace	2015 - 2020	FL	FR	
	570	Sportsman Ace Euro	2015 - 2020	FL	FR	
	700	Ranger 4x4 EFi	2009 - 2009	FL	FR	
	700	Ranger 6x4 EFi	2008 - 2008	FL	FR	
	700	Ranger Crew (EFi) 4x4	2009 - 2009	FL	FR	RR
XP	700	Ranger 4x4	2008 - 2008	FL	FR	
	800	Ranger 6x6	2010 - 2014	FL	FR	
	800	Ranger Crew	2010 - 2014	FL	FR	
	800	Ranger Crew	2010 - 2014	RL	RR	
	800	Ranger XP	2010 - 2012	FL	FR	
RZR	800	Ranger S EFi	2010 - 2014	FL	FR	
RZR-4	800	Ranger	2010 - 2014	FL	FR	
RZR-4	800	Ranger EPS	2012 - 2012	FL	FR	
	900	D Ranger 4x4 Diesel	2011 - 2014	FL	FR	RR
	900	D Ranger Crew Diesel	-	FL	FR	RR
RZR	900	Brutus	2013 - 2017	FL	FR	
RZR	900	Ranger XP	2011 - 2011	FL	FR	
RZR	900	Ranger XP EFi	2012 - 2012	FL	FR	
RZR	900	Ranger XP White Lightning LE	2011 - 2011	FL	FR	
	1 000	General 4 EPS (4 Seat)	2017 - 2019	FL	FR	
	1 000	General EPS (2 Seat)	2017 - 2019	FL	FR	
	1 000	Ranger Diesel	2015 - 2015	FL	FR	
	1 000	Ranger Diesel Crew	2015 - 2015	FL	FR	
RZR	1 000	XP	2014 - 2014	FL	FR	RR

EQUIVALENTS OEM

2203747	1911228

PART NUMBER

314

AD	K5	S3	S33 RACING

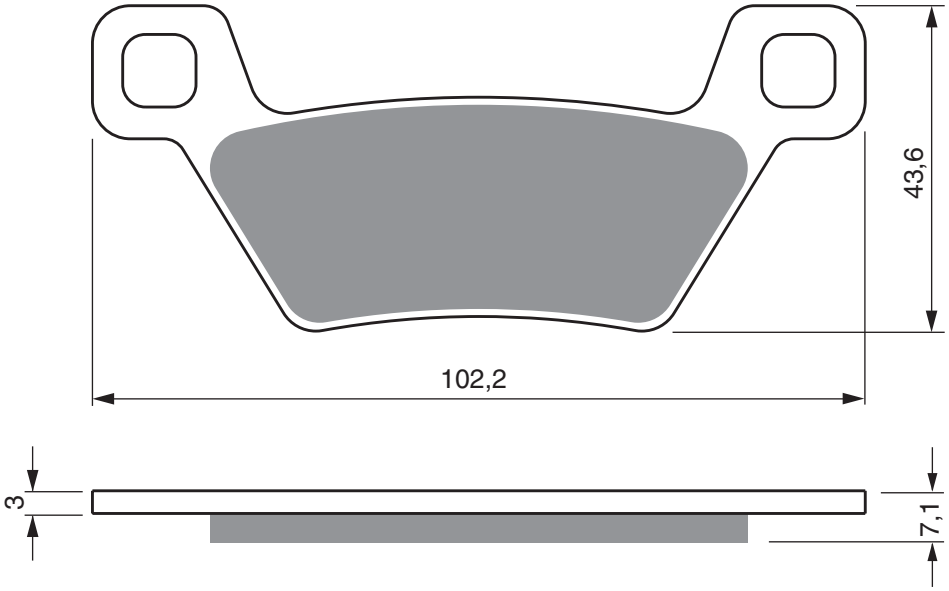

KYMCO

MXU	500	i (4x4 IRS) (LAAOCD/CM)	2009 - 2014	RR
MXU	500	i DX	2011 - 2013	RR
MXU	550	i	2012 - 2015	RR
MXU	550	i (4x4 LOF)	2013 - 2020	RR
MXU	700	i (4x4 LOF)	2013 - 2018	RR
UXV	700	i Turf	2014 - 2015	RR

EQUIVALENTS OEM

43105 LFE9 305

AD	K1	K5	S3	S33 RACING

PART NUMBER

315

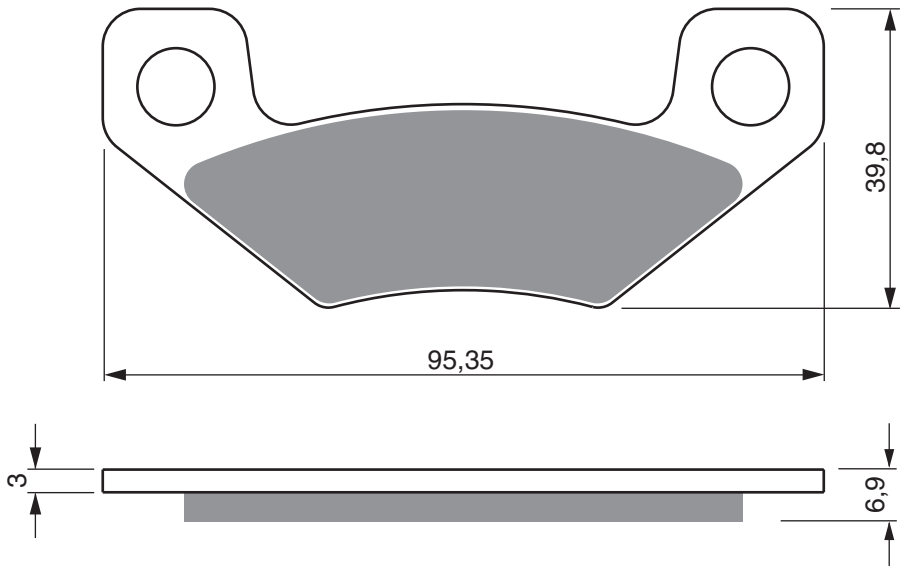

CAN-AM

DS	450	(2x4/EFi)	2008 - 2015	RR
DS	450	X (2x4/EFi)	2008 - 2009	RR
DS	450	XXC/XXM	2010 - 2015	RR

CLUB CAR

	294	Carryall	2004 - 2006	FL
XRT	1 500		2004 - 2006	FL

CUSHMAN

	800	Cushman Hauler	2012 - 2018	FL
	1 200	Cushman Hauler	2012 - 2015	FL

EZ-GO

	E-Z-GO Express S6	2012 - 2019	FL	
	E-Z-GO TXT G5	2008 - 2019	FL	

JOHN DEERE

	Gator HPX (all models)	2004 - 2005	FL	RR	
HPX	4x4 (Diesel) (SN040000)	2010 - 2010	FL	FR	RR
HPX	4x4 Gator (Diesel)	2010 - 2010	FL	RR	
HPX	4x4 Gator (Petrol)	2010 - 2011	FL	FR	RR
HPX	4x4 Gator (Petrol)	2010 - 2011	PB		
HPX	4x4/4x4 Trail Gator (Petrol)	2010 - 2011	FL	FR	RR

EQUIVALENTS OEM

VGA 12182	VGA 12183	705600485	Z150-9261	705600 711

PART NUMBER

316

AD	K5	S3	S33 RACING

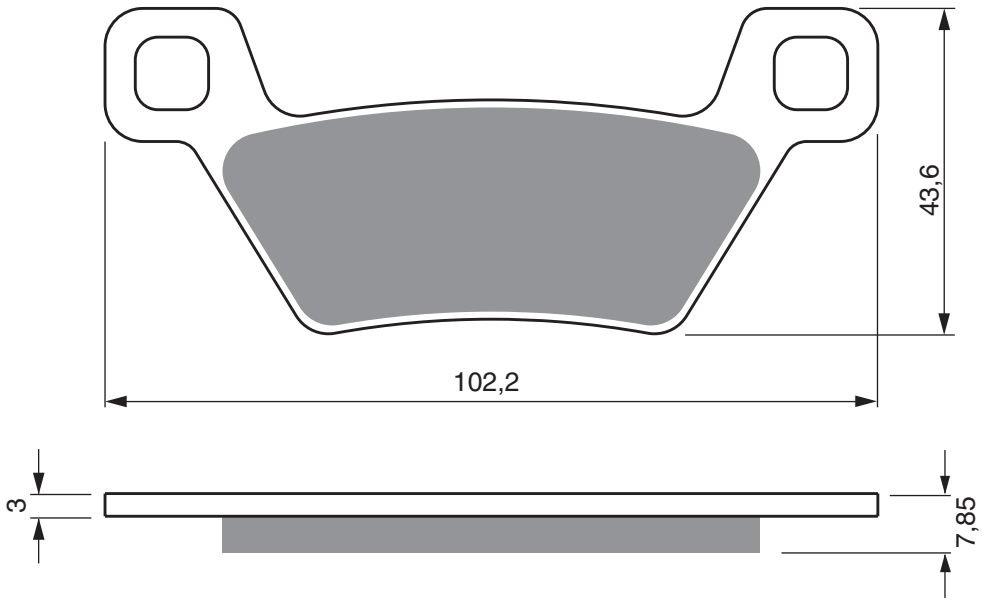

KYMCO

MXU	500	i (4x4 IRS) (LAAOCD/CM)	2009 - 2014	FL	FR
MXU	500	i DX	2011 - 2013	FL	FR
MXU	550	i	2012 - 2015	FL	FR
MXU	550	i (4x4 LOF)	2013 - 2020	FL	FR
MXU	700	i (4x4 LOF)	2013 - 2018	FL	FR
UXV	700	i Turf	2014 - 2015	FL	FR

EQUIVALENTS OEM

45105 LFE9 305	45105 ACL1 305

AD | S3

PART NUMBER

317

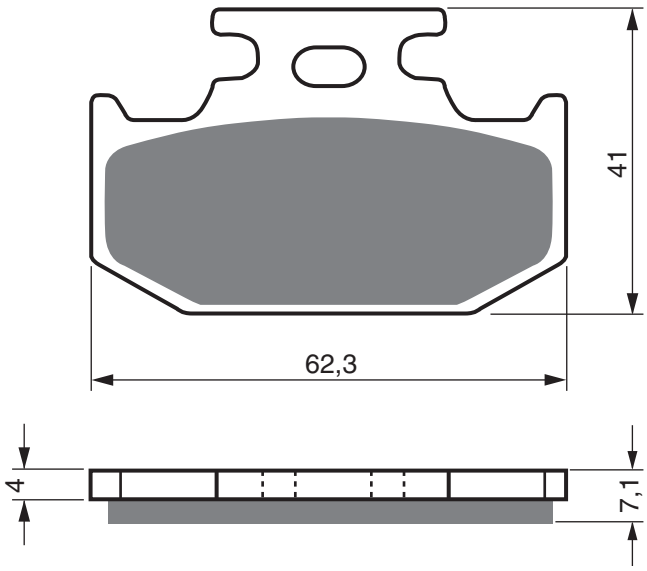

YAMAHA

YXC	700	E Viking VI EPS (YXC700PF/PXG/PXH/PXJ)	2015 - 2018	PB
YXM	700	E Viking EPS COMO (YXM70VPHG)	2016 - 2016	PB
YXM	700	E Wolverine R (YXE70WPHG)	2016 - 2016	PB
YXM	700	ES - Viking EPS SE (YXM700PSE)	2014 - 2016	PB
YXR	700	FA/FB/FD Rhino Side x Side	2011 - 2013	PB
YXR	700	Rhino 4x4 SE	2009 - 2009	PB
YXZ	1 000	R EPS (Side x Side) YXZ10PXG	2016 - 2016	PB
YXZ	1 000	R SE (Side x Side)	2016 - 2016	PB
YXZ	1 000	R SS (Side x Side)	2017 - 2018	PB

EQUIVALENTS OEM

5B4 W0046 00	5B4 2586 00

PART NUMBER

318

AD | S3 | S33 RACING

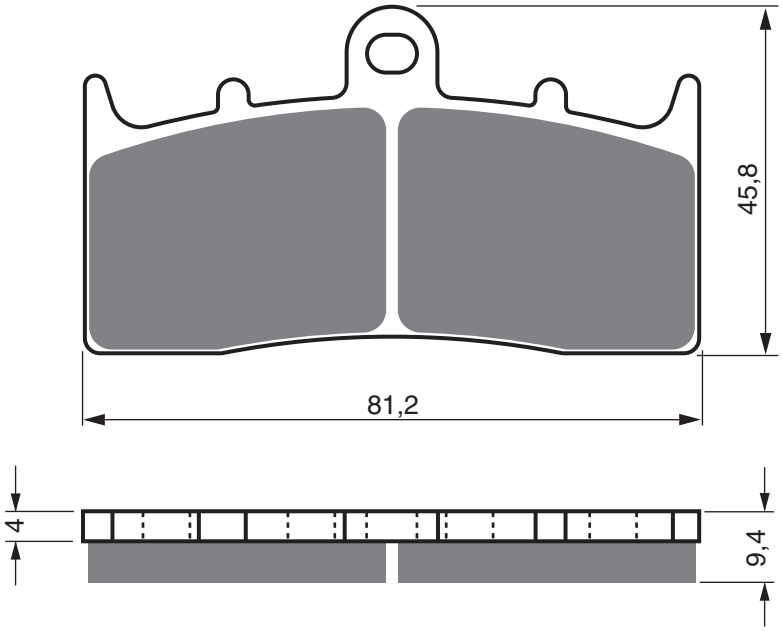

BMW

K	1 600	B Bagger	2017 - 2020	FL	FR
K	1 600	B Grand America	2018 - 2020	FL	FR
K	1 600	GT (Disc has fixed bobbins)	2011 - 2020	FL	FR
K	1 600	GT Sport (Disc has fixed bobbins)	2015 - 2015	FL	FR
K	1 600	GTL (Disc has fixed bobbins)	2011 - 2020	FL	FR
K	1 600	GTL Exclusive (Disc has fixed bobbins)	2013 - 2016	FL	FR
K	1 600	GTSE (Disc has fixed bobbins)	2012 - 2015	FL	FR

EQUIVALENTS OEM

34 11 7 728 945

AD | K5 | S3

PART NUMBER

319

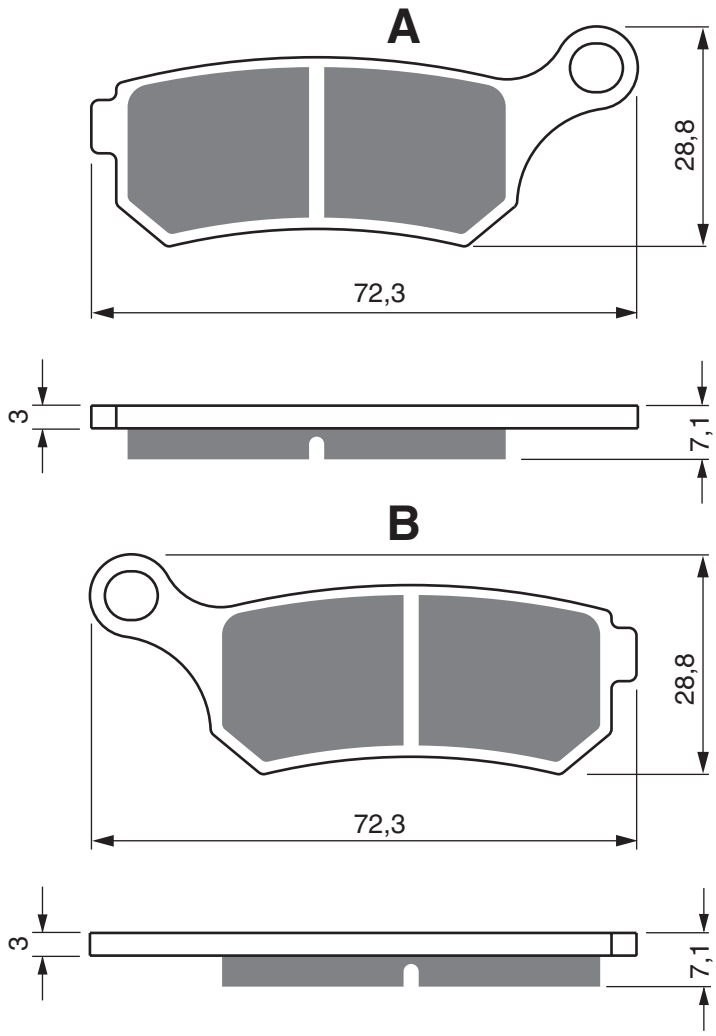

COBRA

CX	65	2013 - 2013 FL

PART NUMBER

320

AD	K1	K5	S3

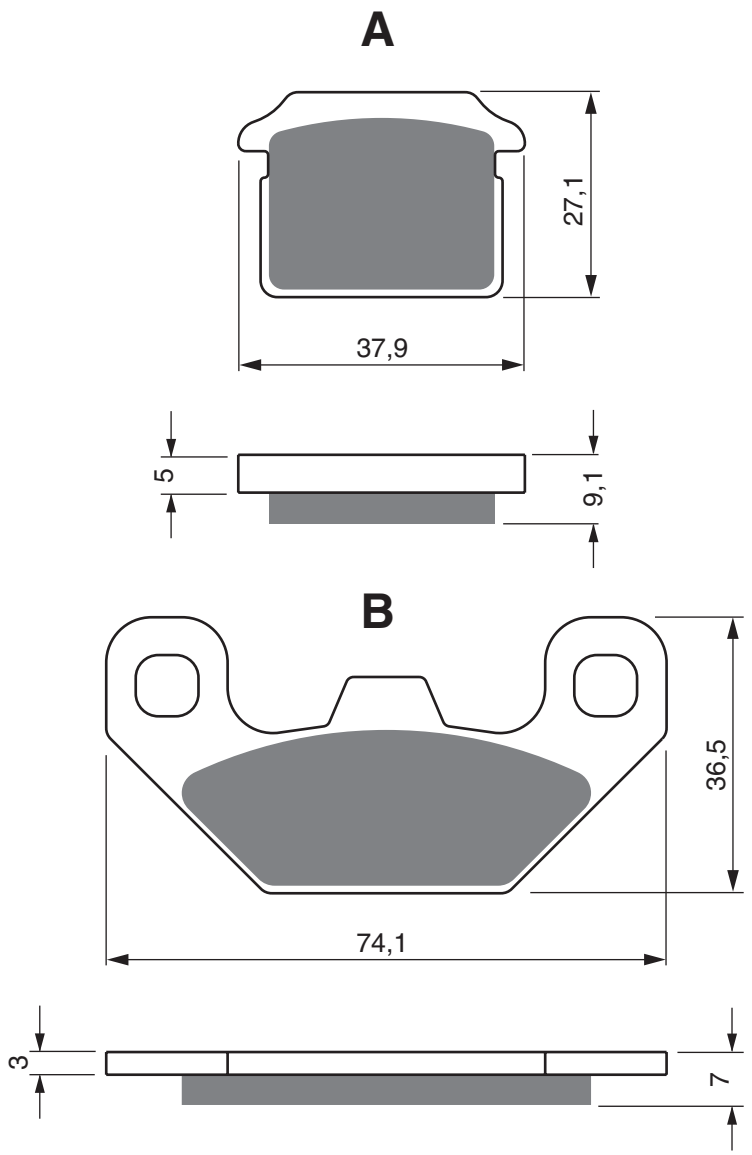

COBRA

CX	65	2013 - 2013 RR

S3 | S33 RACING | GP5 | GP6

PART NUMBER

321

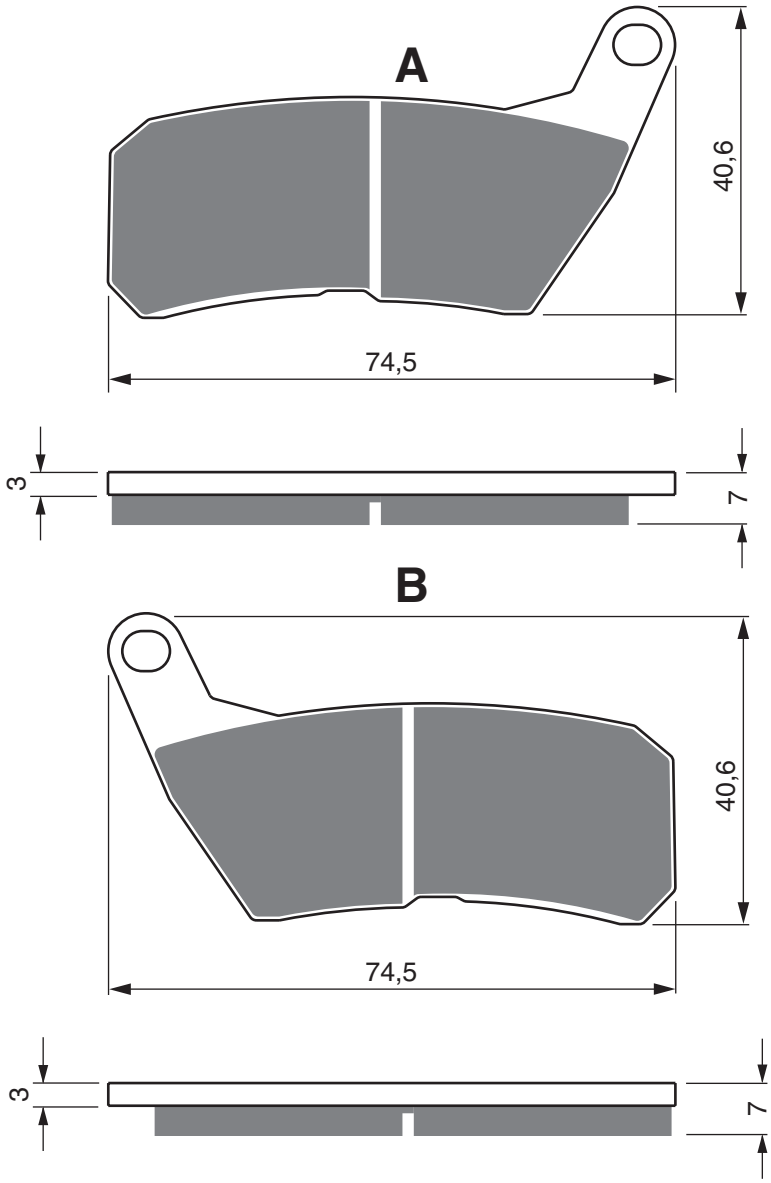

HM

CRE	50	Six Competition	2007 - 2012	FL
CRM	50	Derapage Competition	2009 - 2012	FL
CRE-F	125	X Six (4T)	2010 - 2011	FL
CRM	125	(Derapage Competition 2T)	2011 - 2012	FL
CRM F	125	X (Derapage Competition 4T)	2010 - 2011	FL

MAGURA

	770	Radial Bremssystem	FL

EQUIVALENTS OEM

K00979315

PART NUMBER

322

AD | S3 | S33 RACING

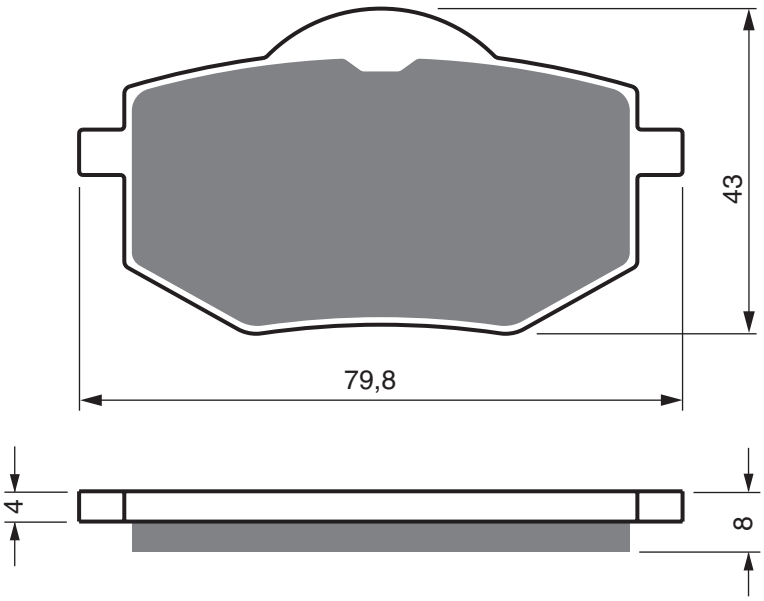

YAMAHA

XV	535	Virago	1988 - 1994 FL

EQUIVALENTS OEM

3JB W0045 00

AD | S3 | S33 RACING

PART NUMBER

323

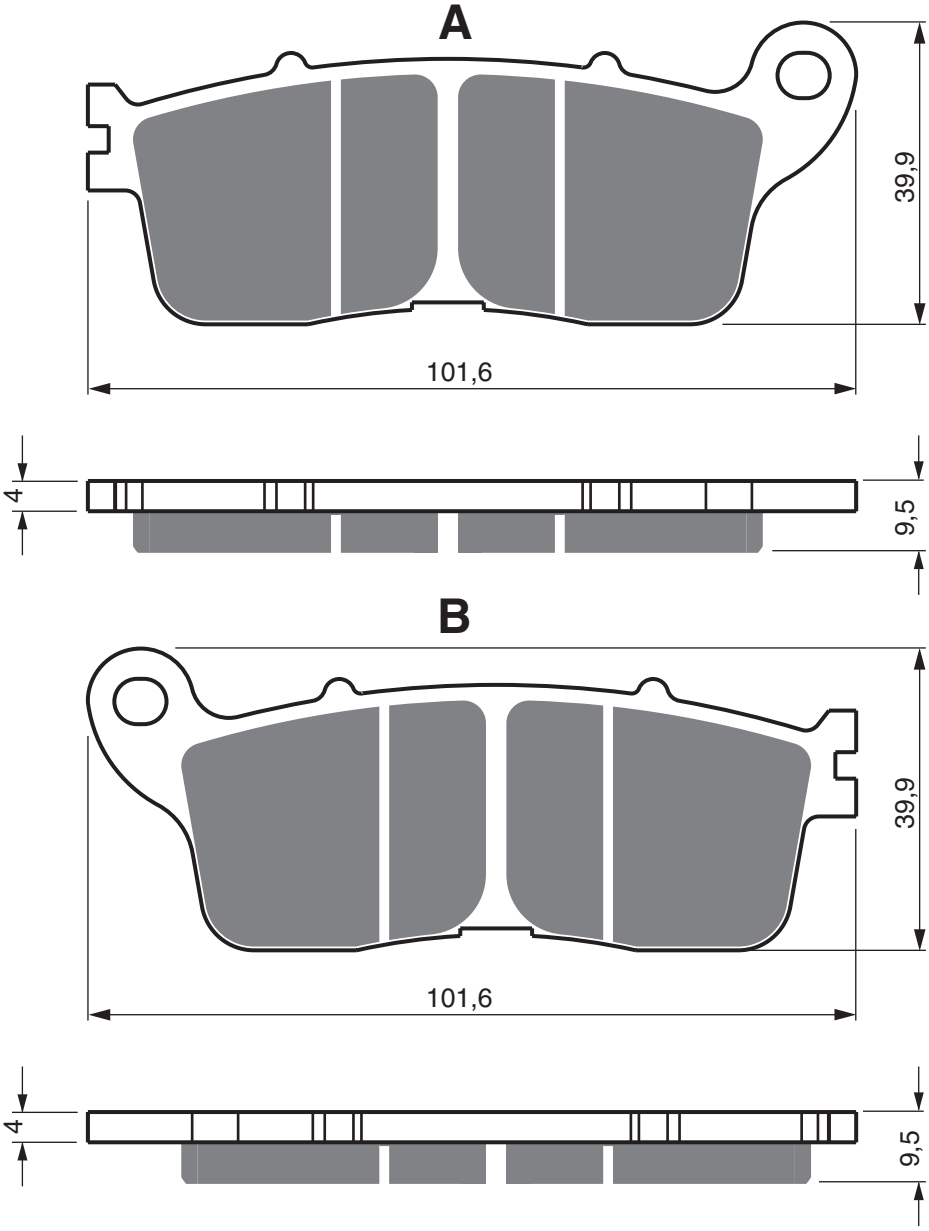

HONDA

VFR	1 200	Crosstourer Highlander T/DCT	2015 - 2016	RR
VFR	1 200	FAD DCT	2010 - 2017	RR
VFR	1 200	FAD GT/DCT	2014 - 2015	RR
VFR	1 200	XAC/XAD/XAE/XAF/XAH/XAJ Crosstourer (Manual G/Box)	2012 - 2018	RR
VFR	1 200	XDC/XDCD/XDE/XDF/XDG/XDH/XDJ DCT Crosstourer	2012 - 2018	RR

EQUIVALENTS OEM

06435 MGE D01	06435 MGE D02

PART NUMBER

324

AD	S3	S33 RACING	GP5	GP6	GP7

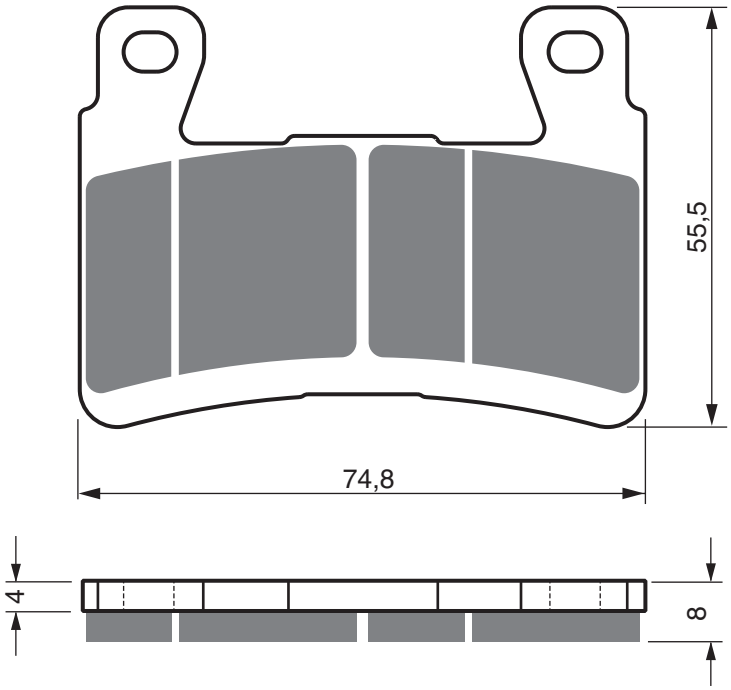

KAWASAKI

ZX-6R	636	30th Anniversary Edition (ZX 636 EFFA / Non ABS/ 636cc)	2015 - 2015	FL	FR
ZX-6R	636	30th Anniversary Edition (ZX 636 FFFA / ABS 636cc)	2015 - 2015	FL	FR
ZX-6R	636	Ninja (ABS - 636cc)	2013 - 2020	FL	FR
ZX-6R	636	Ninja (Non ABS - 636 cc)	2013 - 2020	FL	FR
ZX-6R	636	Ninja KRT (ABS - 636cc)	2016 - 2020	FL	FR
ZX-6R	636	Ninja KRT (Non ABS - 636cc)	2016 - 2020	FL	FR

AD	K5	S3	S33 RACING

PART NUMBER

325

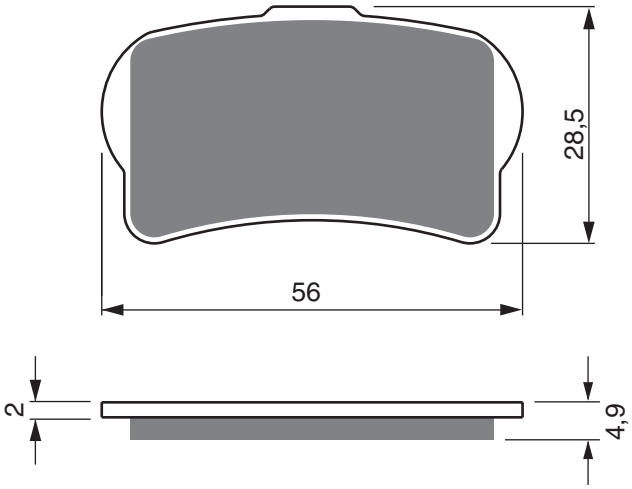

GAS GAS

TXT	125	Racing (2T Monobloc Caliper)	2014 - 2019	FL
TXT	125	Replica Factory (2T Monobloc Caliper)	2013 - 2014	FL
TXT	250	Racing (2T Monobloc Caliper)	2014 - 2019	FL
TXT	250	Replica Factory (2T Monobloc Caliper)	2013 - 2014	FL
TXT	280	Racing (2T Monobloc Caliper)	2014 - 2019	FL
TXT	280	Replica Factory (2T Monobloc Caliper)	2013 - 2014	FL
TXT	300	Racing (2T Monobloc Caliper)	2014 - 2019	FL
TXT	300	Replica Factory (2T Monobloc Caliper)	2013 - 2014	FL

JOTAGAS

JT	125	for FRONT Braktec caliper	2014 - 2014	FL
JT	250	for FRONT Braktec caliper	2014 - 2014	FL
JT	280	for FRONT Braktec caliper	2014 - 2014	FL
JT	300	for FRONT Braktec caliper	2014 - 2014	FL

MONTESA

	260	4 Ride Enduro (260cc/4T)	2016 - 2018	FL
4RT	260	Cota (Repsol Edition 2E/4E)	2014 - 2021	FL
RR	300	Cota (4T)	2016 - 2016	FL

EQUIVALENTS OEM

BT65003013	45105 NN4 K20

PART NUMBER

326

AD	S3	S33 RACING

1 set = 4 pcs

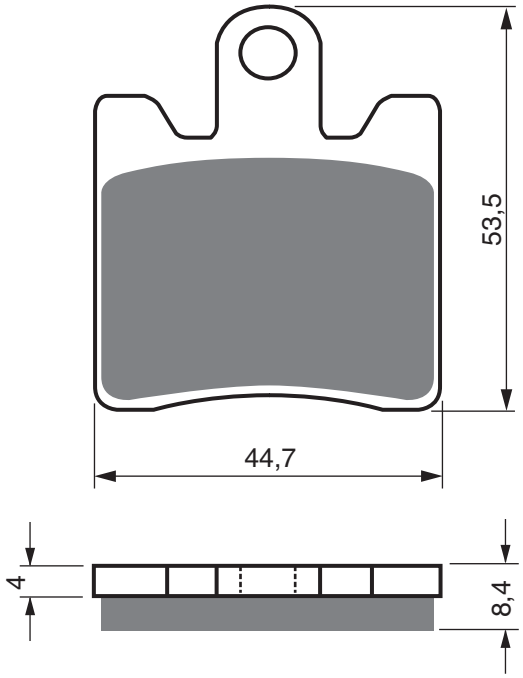

TRIUMPH

	1 215	Trophy SE	2012 - 2017	FL	FR
	1 215	Trophy	2012 - 2016	FL	FR

YAMAHA

FJR	1 300	A (ABS)	2006 - 2009	FL	FR
FJR	1 300	A (ABS)	2010 - 2012	FL	FR
FJR	1 300	A (ABS)	2013 - 2020	FL	FR
FJR	1 300	AE (Electronic Suspension Adjustment/USD Forks)	2014 - 2021	FL	FR
FJR	1 300	AS (ABS/Electric Shift)	2006 - 2009	FL	FR
FJR	1 300	AS (ABS/Electric Shift)	2010 - 2012	FL	FR
FJR	1 300	AS (ABS/Electric Shift)	2013 - 2021	FL	FR
XV	1 900	A Midnight Star	2011 - 2013	FL	FR
XV	1 900	ACFD Midnight Star/Handlebar Fairing	2013 - 2016	FL	FR
XVS	1 900	A (Midnight Star 3 Spring Clutch)	2011 - 2013	FL	FR
XVS	1 900	A (Midnight Star 3 spring clutch)	2013 - 2016	FL	FR

EQUIVALENTS OEM

3P6 W0045 00	1CR W0045 00	T2022395	202239

AD | S3 | S33 RACING

PART NUMBER

327

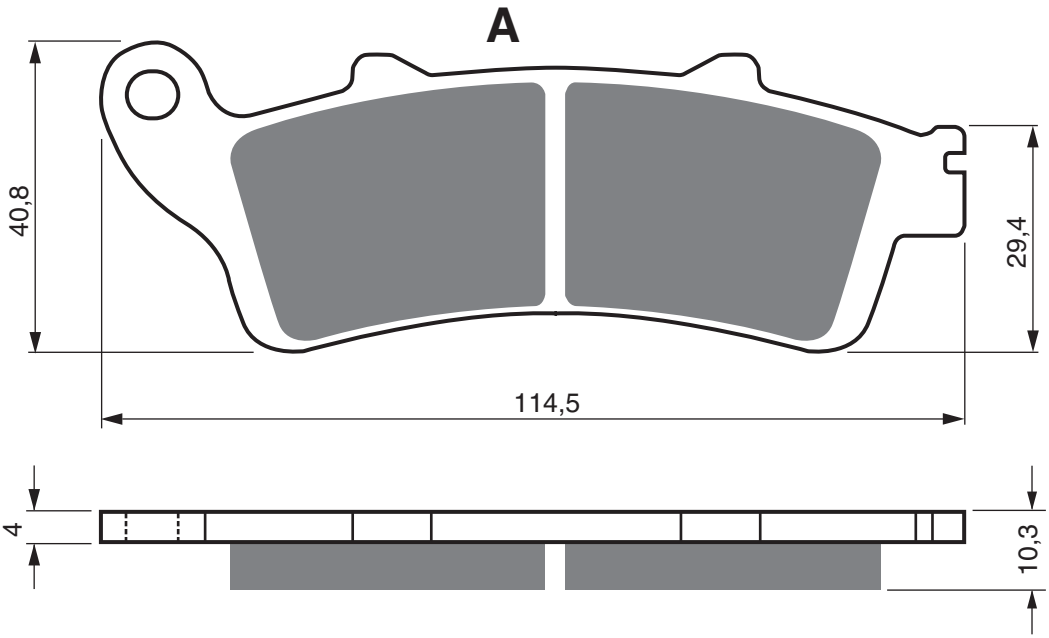

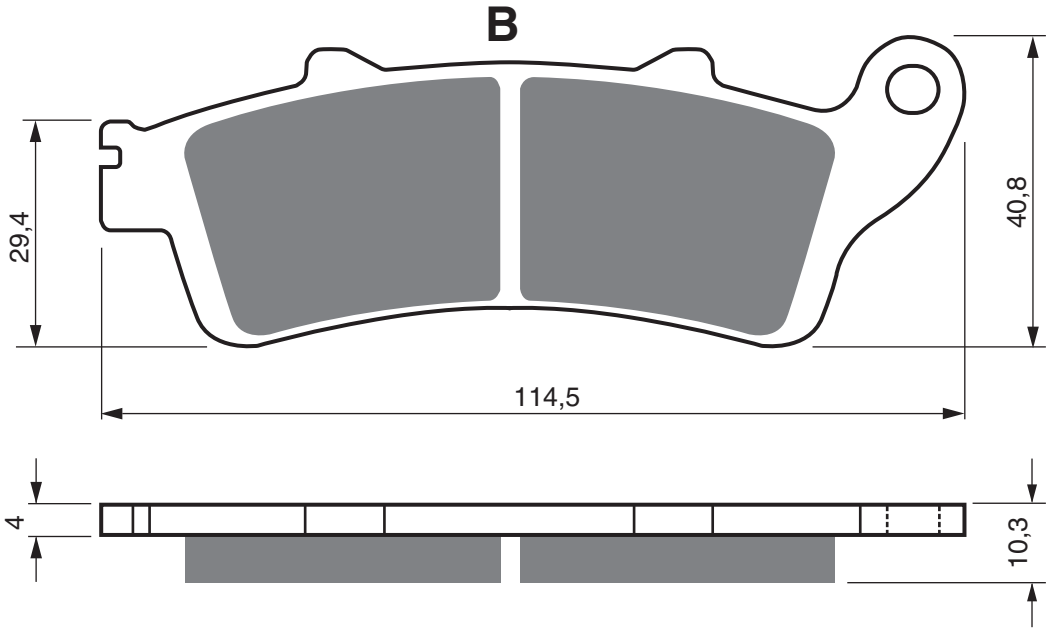

HONDA

VT	1 300	CTA Interstate	2011 - 2013	RR
F6B	1 800	Goldwing (GLF6BA)	2013 - 2017	RR
F6C	1 800	Goldwing (4 Piston Caliper) (GLF6CAE)	2014 - 2017	RR
GL	1 800	A1/A2/A3/A4/A5 "Goldwing"	2001 - 2005	RR
GL	1 800	6/7/8/9/A/C/D/E/F/G/H Goldwing	2006 - 2017	RR

EQUIVALENTS OEM

06435 MCA 006	06435 MCA 016

PART NUMBER

328

AD	S3	S33 RACING	GP5	GP6	GP7	GPR

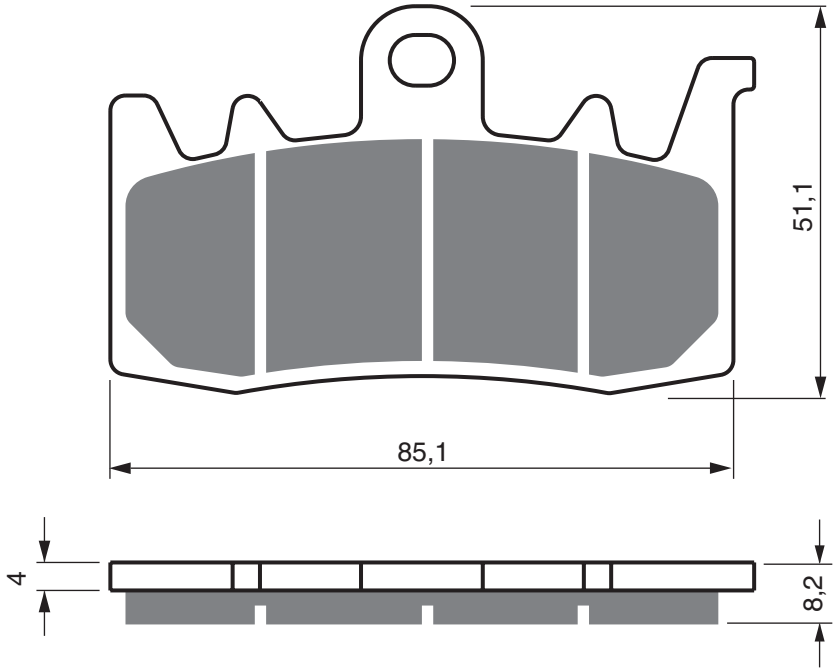

APRILIA

	1 000	Tuono V4R APRC ABS	2013 - 2014	FL	FR
	1 100	Tuono Factory V4	2015 - 2016	FL	FR
	1 100	Tuono RR V4	2015 - 2016	FL	FR
	1 200	Caponord (Cast Wheels)	2013 - 2016	FL	FR
	1 200	Caponord Rally (Spoke Wheels)	2015 - 2020	FL	FR

BENELLI

BN	600	R	2014 - 2016	FL	FR
BN	600	S	2014 - 2015	FL	FR

BMW

F	800	R	2015 - 2020	FL	FR
F	800	R Sport	2015 - 2015	FL	FR
F	900	R	2020 - 2020	FL	FR
F	900	XR	2020 - 2020	FL	FR
S	1 000	XR (Disc has fixed bobbins)	2015 - 2018	FL	FR
R	1 200	GS (K50) (Liquid Cooled/radial mount caliper)	2013 - 2018	FL	FR
R	1 200	GS Adventure (inc TE/XE models/K51/LC)	2014 - 2018	FL	FR
R	1 200	Nine T (K21) (1170cc)	2014 - 2020	FL	FR
R	1 200	R (Disc has fixed bobbins)	2015 - 2018	FL	FR
R	1 200	R Sport (Disc has fixed bobbins)	2015 - 2018	FL	FR
R	1 200	RS (Disc has fixed bobbins)	2015 - 2018	FL	FR
R	1 200	RS Sport (Disc has fixed bobbins)	2015 - 2018	FL	FR
R	1 200	RT (K52 Radial F-Caliper / LC)	2014 - 2018	FL	FR

CAN-AM

		Spyder F3 (SE6/SM6)	2015 - 2021	FL	FR
		Spyder F3 LTD	2016 - 2021	FL	FR
		Spyder F3-S (SE6/SM6)	2015 - 2021	FL	FR
		Spyder F3-S (Special Series)	2016 - 2016	FL	FR
		Spyder F3-T	2016 - 2021	FL	FR
		Spyder RS (Brembo Calipers)	2013 - 2016	FL	FR
		Spyder RS-S (Brembo Calipers)	2013 - 2016	FL	FR
		Spyder RT (3 cyl eng/6 speed)	2013 - 2021	FL	FR
		Spyder RT LTD (3 cyl eng/6 speed)	2013 - 2021	FL	FR
		Spyder RT-S (3 Cyl Eng/6 Speed)	2013 - 2015	FL	FR
		Spyder RT-S (Special Series)	2016 - 2017	FL	FR
		Spyder ST (Brembo calipers)	2013 - 2016	FL	FR
		Spyder ST LTD (Brembo calipers)	2013 - 2015	FL	FR
		Spyder ST-S (Brembo calipers)	2013 - 2016	FL	FR
	500	Spyder F3-S Daytona	2017 - 2017	FL	FR

CCM

	600	Spitfire	2019 - 2019	FL	
	600	Spitfire Bobber	2019 - 2020	FL	
	600	Spitfire Bobber Stealth Edition	2019 - 2020	FL	
	600	Spitfire Foggy Edition	2019 - 2020	FL	
	600	Spitfire Foggy Edition S	2019 - 2020	FL	
	600	Spitfire Foggy Stealth Edition	2019 - 2020	FL	
	600	Spitfire RAFBF 100	2019 - 2020	FL	
	600	Spitfire Six	2019 - 2020	FL	
	600	Spitfire Six Stealth Edition	2019 - 2020	FL	
	600	Spitfire Stealth	2019 - 2020	FL	

DUCATI

	797	+ Monster	2018 - 2020	FL	FR
	797	Monster	2017 - 2021	FL	FR
	803	Scrambler Café Racer (Cast Wheels)	2017 - 2021	FL	FR
	803	Scrambler Classic (Spoke Wheels)	2015 - 2020	FL	FR
	803	Scrambler Desert Sled (Spoke Wheels)	2017 - 2020	FL	FR
	803	Scrambler Flat Track Pro	2016 - 2016	FL	FR
	803	Scrambler Full Throttle (Cast Wheels)	2015 - 2021	FL	FR
	803	Scrambler Icon (Cast Wheels)	2015 - 2021	FL	FR
	803	Scrambler Mach 2 (Cast wheels)	2018 - 2020	FL	FR
	803	Scrambler Street Classic (Cast wheels)	2018 - 2021	FL	FR
	821	Hypermotard	2013 - 2016	FL	FR
	821	Hypermotard SP	2013 - 2016	FL	FR

AD | S3 | S33 RACING | GP5 | GP6 | GP7 | GPR

PART NUMBER

328

	821	Hyperstrada	2013 - 2016	FL	FR
	821	Monster	2015 - 2021	FL	FR
	821	Monster Dark/Monster Stripe	2015 - 2020	FL	FR
	899	Panigale	2014 - 2015	FL	FR
	936	Supersport	2017 - 2020	FL	FR
	936	Supersport S	2017 - 2020	FL	FR
	939	Hypermotard	2016 - 2020	FL	FR
	939	Hypermotard SP	2016 - 2020	FL	FR
	939	Hyperstrada	2016 - 2017	FL	FR
	950	Multistrada (936cc)	2017 - 2020	FL	FR
	955	Panigale V2	2019 - 2020	FL	FR
	955	Panigale V2 Bomber	2019 - 2020	FL	FR
	959	Panigale (ABS)	2016 - 2019	FL	FR
	959	Panigale Corse (ABS)	2018 - 2019	FL	FR
	985	Panigale (ABS)	2016 - 2019	FL	FR
	1 100	Scrambler (1079cc)	2018 - 2021	FL	FR
	1 100	Scrambler Special (1079cc)	2018 - 2020	FL	FR
	1 100	Scrambler Sport (1079cc)	2018 - 2021	FL	FR
	1 200	Monster	2014 - 2020	FL	FR
	1 200	Multistrada (ABS (Single PIn F/Caliper)	2015 - 2018	FL	FR
	1 200	Multistrada DVT	2015 - 2017	FL	FR
	1 200	Multistrada Enduro	2016 - 2016	FL	FR
	1 200	Multistrada Enduro	2017 - 2018	FL	FR
	1 200	Multistrada Enduro Pro	2018 - 2019	FL	FR
	1200	Multistrada V4	2021 - 2021	FL	FR
	1 260	Multistrada	2018 - 2020	FL	FR
	1 260	Multistrada Touring	2018 - 2021	FL	FR
	1 262	XDiavel	2016 - 2021	FL	FR

FANTIC

	500	Caballero	2017 - 2017	FL	

HARLEY DAVIDSON

		Livewire (Electric)	2018 - 2020	FL	FR

INDIAN

FTR	1 200		2018 - 2020	FL	FR
FTR	1 200	Rally	2020 - 2020	FL	FR
FTR	1 200	S	2019 - 2020	FL	FR
FTR	1 200	S Race Replica	2019 - 2020	FL	FR
	1800	Challenger	2019 - 2020	FL	FR
	1800	Challenger Dark Horse	2019 - 2020	FL	FR
	1800	Challenger Limited	2019 - 2020	FL	FR

KAWASAKI

Z	1 000	H2	2020 - 2021	FL	FR

KTM

	890	Duke R	2020 - 2020	FL	FR

KYMCO

AK	550		2017 - 2019	FL	FR

MV AGUSTA

	800	Rivale	2017 - 2018	FL	FR
	800	Stradale	2015 - 2015	FL	FR
	800	Turismo Veloce	2014 - 2018	FL	FR
	800	Turismo Veloce Lusso	2015 - 2020	FL	FR
	800	Turismo Veloce Lusso SCS	2019 - 2020	FL	FR
	800	Turismo Veloce RC	2017 - 2018	FL	FR
	800	Turismo Veloce RC SCS	2019 - 2020	FL	FR

NORTON

	961	Commando Café Racer	2015 - 2015	FL	FR
	961	Commando Dominator SS	2015 - 2020	FL	FR
	961	Commando SF	2010 - 2015	FL	FR

TRIUMPH

	1 200	Tiger XCa	2018 - 2020	FL	FR
	1 200	Tiger XCx	2018 - 2020	FL	FR
	1 200	Tiger XR	2018 - 2020	FL	FR
	1 200	Tiger XRt	2018 - 2020	FL	FR
	1 200	Tiger XRx	2018 - 2020	FL	FR
	1 200	Tiger XRx Low	2018 - 2020	FL	FR
	1 215	Tiger Explorer XC	2016 - 2017	FL	FR
	1 215	Tiger Explorer XCa	2016 - 2017	FL	FR
	1 215	Tiger Explorer XCx/XCx Low	2016 - 2017	FL	FR
	1 215	Tiger Explorer XR	2016 - 2017	FL	FR
	1 215	Tiger Explorer XRt	2016 - 2017	FL	FR
	1 215	Tiger Explorer XRx/XRx Low	2016 - 2017	FL	FR
	2 300	Rocket III GT	2019 - 2020	RR	
	2 300	Rocket III R	2019 - 2020	RR	

EQUIVALENTS OEM

219800237	34 11 8 540 956	613 401 21 A	613 410 21 A	2 B000214	B 044601	34 11 8 548 028
8000B9025	34 11 8 535 158					

PART NUMBER

329

AD	K5	S3	S33 RACING

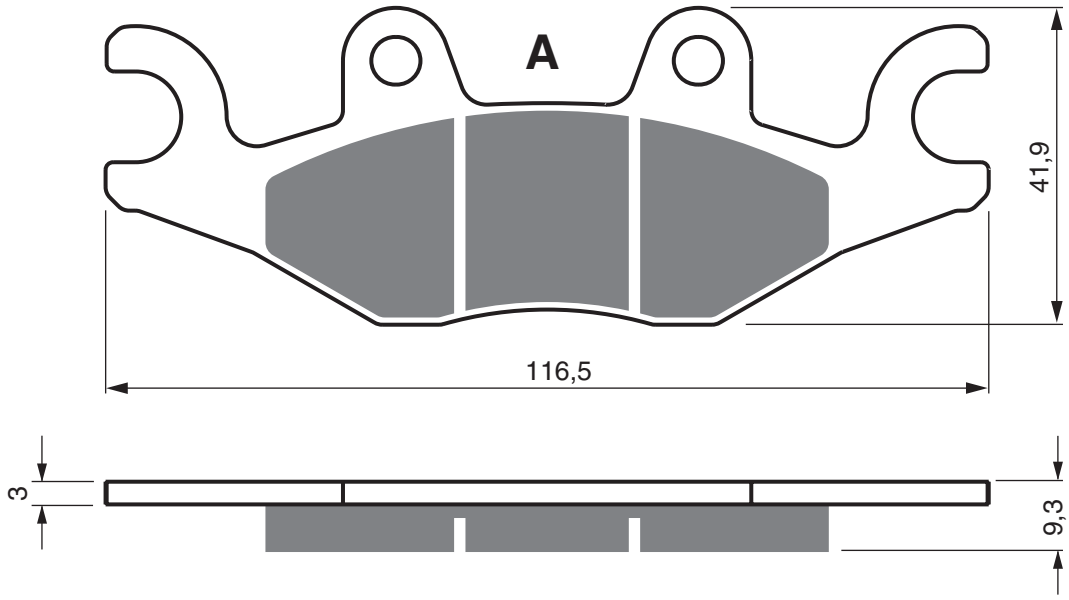

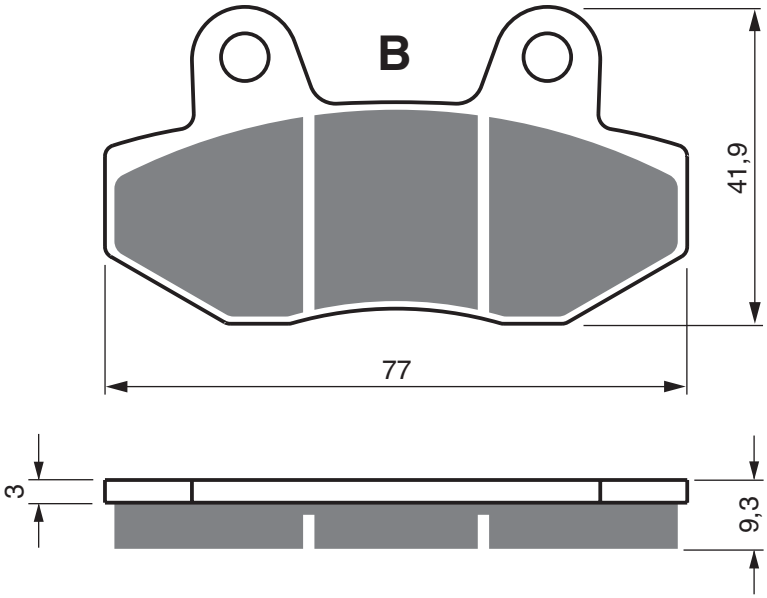

CECTEK

	500	EFI King Cobra	2009 - 2010	FL	FR
	500	EFII Quadrift	2009 - 2010	FL	FR
	500	i Estoc	2010 - 2010	FL	FR

PGO

	500	Bug	2008 - 2009	FL	FR
BR	500	i Racer	2007 - 2009	FL	FR
BR	600	i Bug Racer	2012 - 2012	FL	FR

TGB

125	X-Motion	2008 - 2014	FL	
125	X-Motion Ri	2011 - 2012	FL	
250	X-Motion i	2008 - 2010	FL	
300	X-Motion EFi	2010 - 2012	FL	

EQUIVALENTS OEM

B840C34	3500000	414220

AD | S3 | S33 RACING

PART NUMBER

330

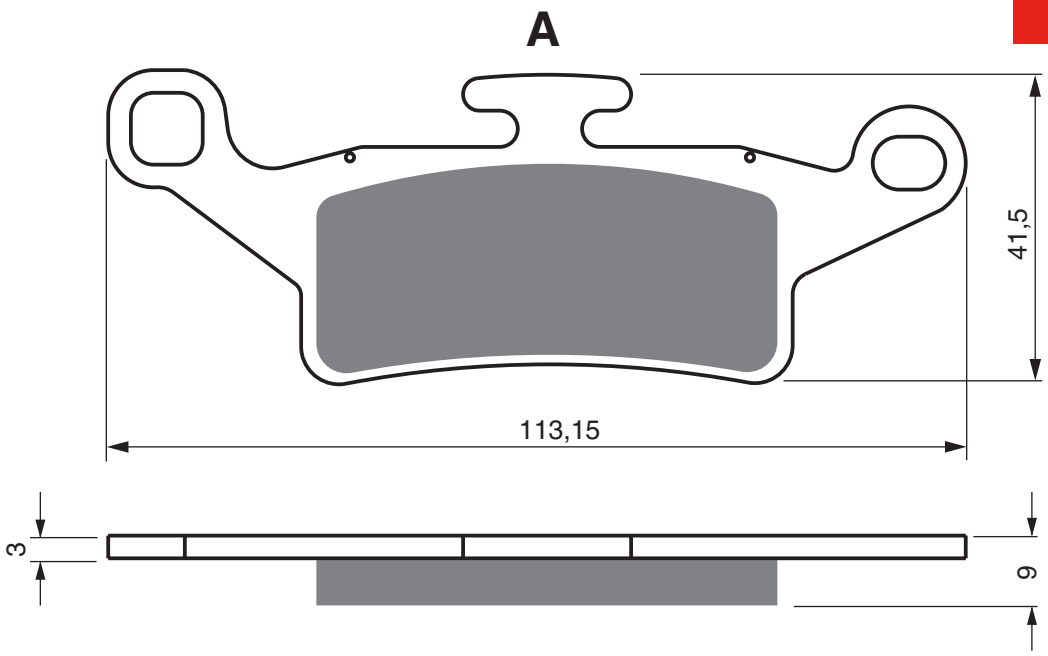

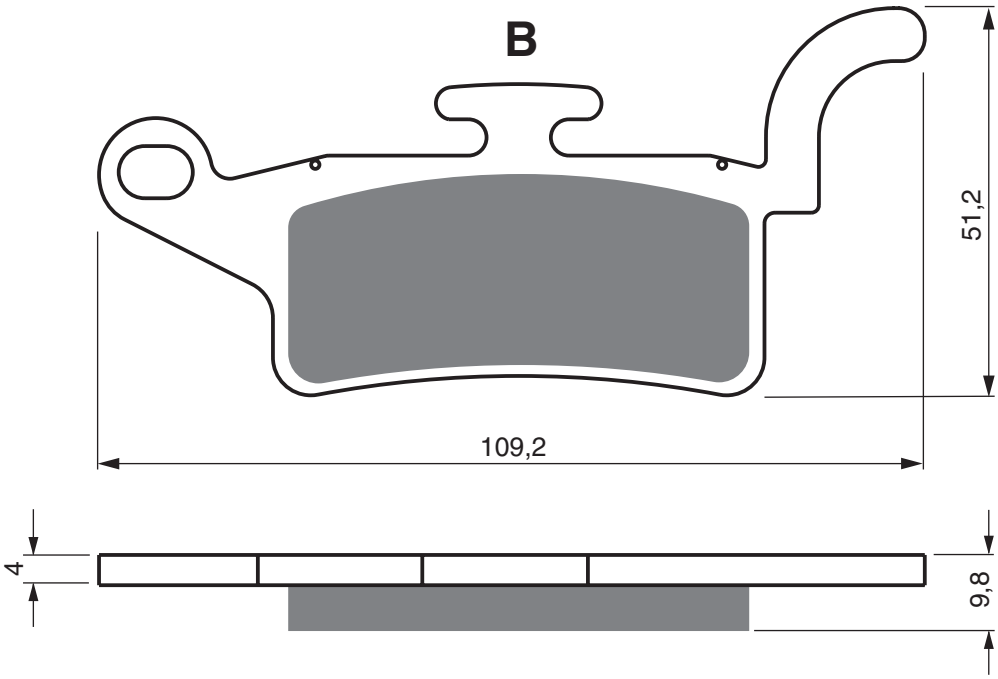

MBK				
YW	125	Z X-Over	2010 - 2010	FL
YAMAHA				
	125	Xenter	2012 - 2018	FL
HW	125		2012 - 2018	FL
YW	125	(BW´s 125)	2010 - 2013	FL
	150	Xenter	2012 - 2017	FL
HW	150		2012 - 2017	FL

EQUIVALENTS OEM

5S9 W0045 00	52S F5811 00

Disc Brake Pads

PART NUMBER

331

AD | S3 | S33 RACING

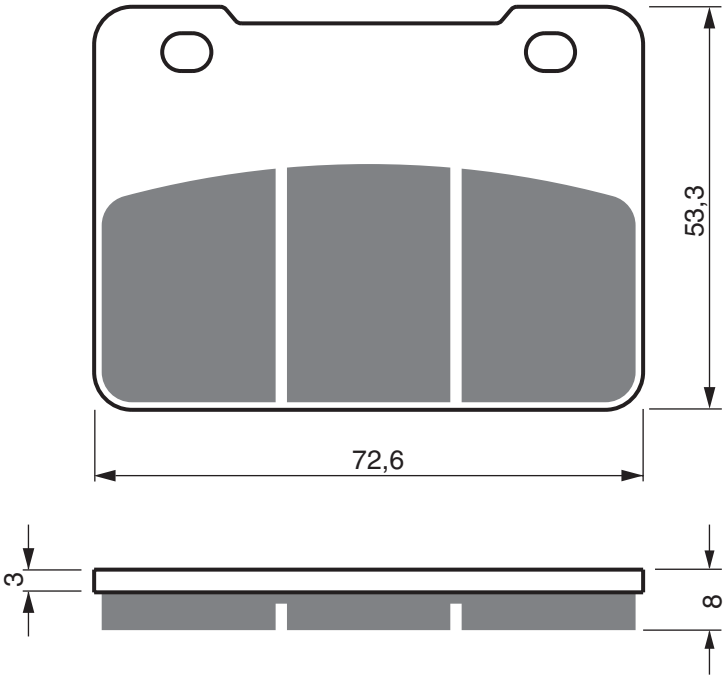

AEON					
	400	i Elite (ABS)	2014 - 2015	FL	
SYM					
SB	250	Ni (Wolf SB)	2012 - 2015	FL	
	400	Max Sym 400i (Inc ABS)	2011 - 2020	FL	FR
	600	Max Sym 600i (ABS)	2014 - 2015	FL	FR

EQUIVALENTS OEM

45130 L4A300	45135 L4A300

AD | S3 | S33 RACING

PART NUMBER
332

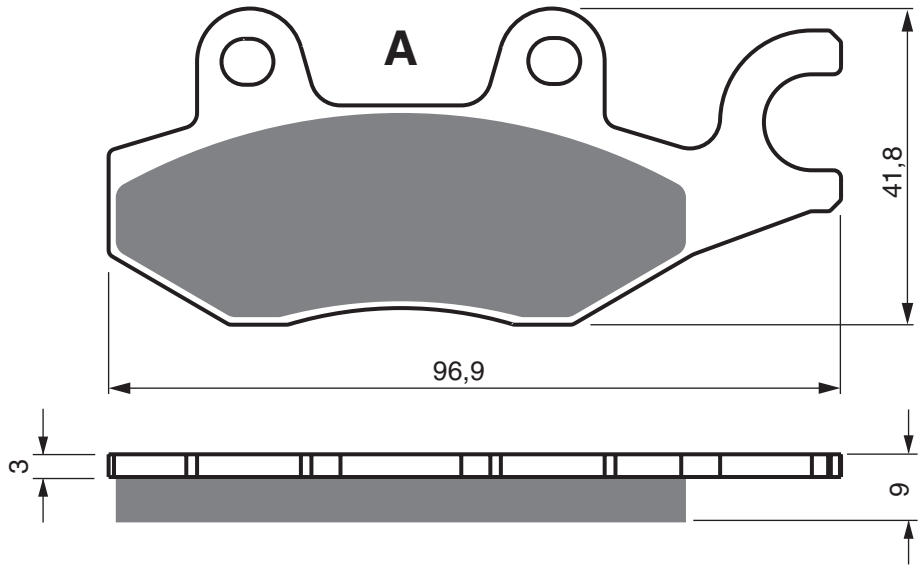

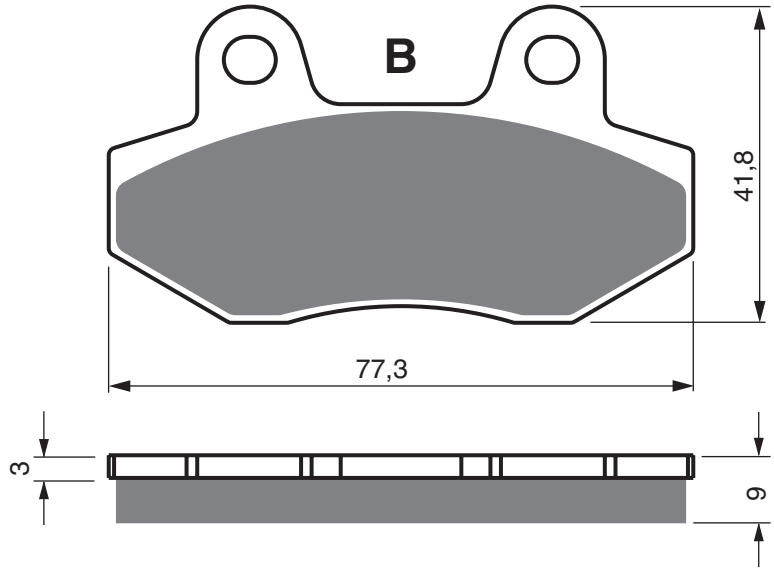

AJS

	50	Crazy Naked	2010 - 2011	FL	
	125	Bobber (Custom)	2010 - 2015	RR	
	125	Daytona	2013 - 2015	RR	
DD	125	E Mk2 Regal Raptor (Cast wheels)	2010 - 2014	RR	
DD	125	E Regal Raptor	2004 - 2006	FL	
EOS	125	Regal Raptor	2009 - 2015	RR	
JSM	125	Trail	2013 - 2014	RR	
NKT 1	125	Naked	2008 - 2009	FL	RR
DD	250	E Regal Raptor	2004 - 2009	FL	
NKT 2	250	Naked	2008 - 2009	FL	
NKT 2	250	Naked	2008 - 2009	RR	
E-9PB	350		2013 - 2014	RR	
EOS	350		2013 - 2014	RR	

ARCTIC CAT

DVX	50	(Y6)	2006 - 2006	RR	

BAJAJ

	125	Discover (Disc Model)	2014 - 2016	FL	
	150	Avenger Street (Cast wheel)	2015 - 2016	FL	
	220	Avenger Street (Cast wheel)	2015 - 2016	FL	
DTS-I	220	Avenger Cruise (Spoke wheel)	2008 - 2014	FL	
DTS-I	220	Avenger Cruise (Spoke wheel)	2015 - 2016	FL	

BENELLI

	250	Caffe Nero	2008 - 2014	FL	

CAN-AM

	600	Ryker	2018 - 2019	FL	
	900	Ryker	2018 - 2019	FL	

CCM

RL	125		2008 - 2009	FL	
SM	125		2008 - 2009	FL	
SM	125		2008 - 2009	RR	
TL	125		2008 - 2009	RR	

CPI

	125	Prince	2001 - 2001	FL	
	125	X-Large	2011 - 2012	FL	RR
	300	X-Large	2011 - 2012	FL	RR

DAELIM

ES	50	S-Four 50cc	2010 - 2012	FL	
S3	125	(SV 125)	2010 - 2011	RR	
SQ	125	Freewing A2	2006 - 2006	RR	
SU	125	Delfino	2007 - 2011	FL	
VJ	125	Roadwin	2004 - 2013	RR	
VJF	125	Roadwin R Fi	2008 - 2014	RR	
SQ	250	Freeway S2	2006 - 2006	RR	
VJF	250	Roadsport	2010 - 2014	RR	
VJF	250	Roadwin R Fi	2008 - 2010	RR	
VL	250	Daystar	2013 - 2014	RR	

GARELLI

	125	Tiger	2007 - 2007	FL	RR

PART NUMBER

332

AD | S3 | S33 RACING

GENERIC

	125	Code (4T)	2017 - 2020	RR	
	125	Worx (4T)	2012 - 2016	FL	
	150	Worx (4T)	2012 - 2016	FL	

GOES

G	125	M	2008 - 2014	RR	
SP	125	R (Motorcycle)	2010 - 2012	RR	

HARTFORD

VR	125	H/X/Z	2004 - 2004	RR	
VR	150	H/X/Z	2004 - 2004	RR	

HONDA

CB	50	V/W Dream 50	1997 - 1998	FL	
NSR	50	RV/RW/RX/RY	1997 - 2000	FL	
NSR	50	V (AC10-180)	1997 - 1997	FL	
NSR	50	X (AC10-190)	1999 - 1999	FL	
XR	50	M5 (AD14) Motard	2005 - 2005	FL	
NSR	75	N/P/R/X/Y (NS-1/NSR80)	1992 - 2000	FL	
NSR	80	P/R/S (HC06)	1993 - 1995	FL	
NSR	80	V (HC06-170)	1997 - 1997	FL	
NSR	80	X (HC06-180)	1999 - 1999	FL	
NF	100	Astra Supra	1999 - 1999	FL	
XR	100	M5 (HD13) Motard	2005 - 2005	FL	
CB	125	F (GLF 125 1WHF)	2015 - 2016	FL	
LS	125	RY	2000 - 2000	RR	
VT	125	CX/CY/C1/C21/C2Y/C3/C4/C7/C8 Shadow	1999 - 2008	FL	
XL	125	V1-VA "Varadero"	2001 - 2016	FL	
NSR	150	RR (Malaysian Market)	2002 - 2005	FL	RR
TA	200	(TA Shadow)	2002 - 2005	FL	RR
CBF	250	4/7	2004 - 2007	FL	
CB	300	R10	2010 - 2010	FL	

HP POWER

	150	Nickel (4T/2V)	2010 - 2011	RR	
	260	Barum (4T/2V/LC)	2010 - 2011	FL	

HYOSUNG

MS3	125	(cc)	2007 - 2009	FR	
MS3	250	i	2007 - 2009	FR	

ITALJET

	50	it Scooter	2009 - 2009	FL	

KAWASAKI

	112	Kaze-R New	2004 - 2004	FL	
	125	Ninja	2016 - 2021	FL	RR
Z	125		2016 - 2021	FL	RR
BN	125	A3/A4/A5/A6F/A7F Eliminator	2000 - 2007	FL	
ZX	130	R Kaze	2008 - 2010	FL	
EX	250	K8F/K9F/KAF/KBF/KBFA/KCF Ninja 250R	2008 - 2012	FL	RR
Z	250	Ninja SL (BX 250 AFF/AFS/AFSA KRT Edition Non ABS)	2015 - 2015	FL	RR
Z	250	Ninja SL (BX 250 BFSA/BGSA KRT/ABS Edition)	2015 - 2016	FL	RR
Z	250	Ninja SL BX 250 (BFF/BFS/BGF/BGFS ABS)	2015 - 2016	FL	RR
Z	250	SL (Naked/ABS) (BR 250 FFF/FGF/FHF)	2015 - 2017	FL	RR
Z	250	SL (Naked/Non ABS) (BR 250 EFF/EGF)	2015 - 2016	FL	RR
EX	300	ADF/AEF/AFF Ninja (Non ABS)	2013 - 2015	FL	RR
EX	300	AEFA/AFFA/AGFA Ninja (Non ABS)	2014 - 2016	FL	RR
EX	300	BDF/BEF/BFF/BGF Ninja (ABS)	2013 - 2016	FL	RR
EX	300	BEFA/BFFA/BGFA Ninja (ABS)	2014 - 2016	FL	RR
KLE	300	BHF Versys-X (Non ABS)	2017 - 2020	RR	
KLE	300	CHF/CJF Versys-X (ABS)	2017 - 2020	RR	
Z	300	ER 300 AFF/AGF/AGFA (Non ABS)	2015 - 2016	FL	RR
Z	300	ER 300 BFF/BGF/BGFA (ABS)	2015 - 2016	FL	RR
EX	400	Ninja (EX 400 GJF/GJFA - ABS)	2017 - 2020	FL	RR
EX	400	Ninja (EX400 GJF/GJFA - ABS KRT)	2018 - 2020	FL	RR
Z	400	ABS	2018 - 2020	FL	RR
KLR	650	(KL 650 E8F/E9F)	2008 - 2009	RR	

KEEWAY

	125	i Silverblade	2013 - 2015	FR	
	125	Silverblade	2010 - 2011	FL	RR
RKS	125		2012 - 2015	FL	
RKV	125	Euro 4	2016 - 2019	RR	
RKS	150		2012 - 2014	FL	
RKS	200		2012 - 2014	FL	
	250	i Blackster	2014 - 2015	RR	
	250	i Silverblade	2013 - 2014	FR	

KREIDLER

	50	Supermoto (2T)	2014 - 2015	RR	
	125	Insignio (4T)	2014 - 2015	FL	
	250	Insignio (4T)	2014 - 2015	FL	

KYMCO

	50	Activ	2004 - 2006	FL	
	50	Bet & Win / Dink Sports 50	2002 - 2006	FL	
	50	Dink	1998 - 2006	FL	
	50	Dink (4T)	2007 - 2014	FL	
	50	Dink Classic Euro 2	2003 - 2003	FL	
	50	Grand Dink (2T)	2004 - 2015	FL	
	50	Grand Dink 50 S	2012 - 2013	FL	
	50	i Kymcosento	2013 - 2013	FL	
	50	i Newsento	2013 - 2013	FL	
	50	Jetix	2010 - 2015	RR	
	50	K-Pipe	2012 - 2012	FL	
	50	Spacer	1998 - 2006	FL	
	50	Super 9 (A/C)	2000 - 2007	FL	
	50	Super 9 (LC) (SH10DA)	2000 - 2007	FL	
	50	Yager	1998 - 2006	FL	
	50	Yager	2007 - 2007	FL	
	110	Activ	2004 - 2006	FL	
	125	Activ	2004 - 2006	FL	
	125	Bet & Win	2000 - 2006	FL	RR
	125	Cruiser	1999 - 1999	FL	
	125	Dink	1997 - 2004	FL	RR
	125	Dink Classic	2002 - 2002	FL	RR
	125	Dink LX	1998 - 2000	FL	RR
	125	Grand Dink	2012 - 2013	RR	
	125	Hipster	1999 - 2006	FL	
	125	i Dink	2006 - 2015	FL	RR
	125	Jetix	2010 - 2015	RR	
	125	K-Pipe	2013 - 2015	FL	
	125	Like (D20000)	2009 - 2009	RR	
	125	Like (LX)	2010 - 2020	RR	
	125	Movie i	2012 - 2013	FL	
	125	Movie XL	2001 - 2009	FL	
	125	Sector	1998 - 2001	FL	
	125	Spacer	1997 - 1997	FL	
	125	Spacer	1997 - 1997	RR	
	125	Spike R	2004 - 2006	FL	RR
	125	Straight	2005 - 2006	FL	
	125	Yager	2000 - 2000	FL	RR
	125	Yager GT	2007 - 2013	FL	RR
	125	Zing	1997 - 2013	FL	
CK	125	Pulsar S	2011 - 2015	FL	
CK	125	Pulstar (RJ25CB)	2001 - 2007	FL	
CK	125	Pulstar 11 (KE25RF)	2008 - 2010	FL	
CK 1	125	(4T/KT25AA)	2014 - 2015	FL	
KR	125	Quannon Naked	2010 - 2015	FL	RR
KR	125	Quannon Sport	2007 - 2013	FL	RR
	150	Agility R16 (C30000) (16"wheels)	2008 - 2012	RR	
	150	Bet & Win	2000 - 2006	FR	RR
	150	Custom	1997 - 1997	FL	
	150	Dink Classic	2002 - 2002	FL	RR
	150	Grand Dink	2001 - 2007	FR	RR
	150	Hipster	1999 - 2006	FL	
	150	Jetix	2010 - 2010	RR	

AD | S3 | S33 RACING

PART NUMBER

332

	150	Miler	2001 - 2007	FL	RR
	150	Movie XL	2001 - 2009	FL	
	200	Activity i R16	2010 - 2012	RR	
	200	Dink i	2006 - 2015	FR	RR
	200	Like i LX	2009 - 2015	RR	
	200	Yager i	2007 - 2013	FR	RR
	250	Bet & Win	2000 - 2006	FL	RR
	250	People	2003 - 2006	FL	
	250	Yup	2003 - 2006	FL	RR
S	250	i People DD	2007 - 2008	FL	
S	300	i People	2008 - 2010	FR	

LEONART

	125	Bobber	2013 - 2014	RR	
	125	Daytona	2013 - 2014	RR	
	125	Raptor	2013 - 2014	RR	
	125	Spyder	2013 - 2014	RR	
	250	Raptor	2013 - 2014	RR	
	350	Bobber	2013 - 2014	RR	
	350	Daytona	2013 - 2014	RR	
	350	Spyder	2013 - 2014	RR	

LEXMOTO

		Michigan (ZS125-79-E4)	2013 - 2020	RR	
	125	Matador EFi (ZS125T-40-E4)	2013 - 2017	RR	
FMS	125	(ZN125T-7H)	2015 - 2018	RR	
MX	125	WY125T-108	2015 - 2018	FL	
XTR-S	125		2013 - 2018	FL	

MODENAS

	115	Kriss		FL	
	125	Dynamic	2008 - 2009	FL	RR
	125	Kristar	2008 - 2011	FL	RR
	135	X-Cite	2009 - 2010	FL	RR

MOTOM

ANA	50		2008 - 2009	RR	
ANA	151		2008 - 2009	RR	

MZ

RT	125		2002 - 2007	FL	
RT	125		2002 - 2007	RR	
SM	125	(All Models)	2002 - 2007	RR	
SX	125	(All Models)	2002 - 2007	RR	

NIPPONIA

	50	Brio (4T)	2012 - 2013	RR	
	125	Arte (4T)		FL	RR
	125	Brio (4T)	2012 - 2015	RR	
	125	Dion (4T)	2013 - 2015	RR	
	150	Arte (4T)		FL	RR
	150	Dion (4T)	2012 - 2014	RR	

PEUGEOT

WTR	125		2008 - 2008	FL	
	400	Metropolis Allure (3 Wheel Model/Nissin Caliper)	2017 - 2018	RR	
	400	Metropolis RS (3 Wheel Model/Nissin Caliper)	2017 - 2018	RR	
	400	Metropolis RX-R (3 Wheel Model / Nisan Caliper)	2017 - 2018	RR	

PGO

	125	G Max	2006 - 2008	RR	
	125	G Max (Wave Disc)	2009 - 2012	RR	
	250	G Max	2006 - 2008	RR	

QUADZILLA

WK	300		2006 - 2008	RR	

SFM

ZX	125	Enduro (Spoke wheels)	2013 - 2015	RR	
ZZ	125	Enduro (Spoke wheels)	2013 - 2015	RR	

SINNIS

QM	125	-2D Stealth	2008 - 2010	FR	

SUZUKI

FD	112	Shogun-R	2004 - 2004	FL	
FL	125	SDWK7/SDWK8 Address/Underbone	2007 - 2010	FL	
FX	125			FL	
UH	125	AL4/AL5/AL6/AL7/AL8 Burgman (ABS)	2014 - 2021	FL	
UH	125	L4/L5/L6 Burgman (Non ABS)	2014 - 2016	FL	
UH	200	AL4/AL5/AL6/AL7/AL8/AL9 Burgman (ABS)	2014 - 2021	FL	
UH	200	L4/L5/L6 Burgman (Non ABS)	2014 - 2016	FL	
AN	250	8 Skywave SS (CJ46A)	2008 - 2008	FR	
AN	250	Skywave Type M (BA-CJ45SA)	2007 - 2008	FR	
AN	250	Skywave Type S (BA-CJ44A)	2007 - 2008	FR	
AN	400	AK9/ZAK9/AL0/ZAL0/AL1/ZAL1/AL2/AL3/AL4/ZAL4/AL5/ ZAL5/AL6/ZAL6/AL7/ZAL7/AL8/ZAL8/AL9/ZAL9 Skywave/ Burgman/ABS	2009 - 2020	FR	
AN	400	K7/ZK7/K8/ZK8/K9/L0/L1/L2/L3/L4 Burgman/Non ABS/ Skywave	2007 - 2015	FR	

SYM

	50	Orbit II Naked (4T)	2012 - 2013	FL	
TS	50	Orbit II (4T)	2012 - 2013	FL	
4VR	125	Shark	2001 - 2002	RR	
MX	125	Euro (Rear Disc model) (HF12 W3-6 Euro 2)	2006 - 2009	RR	
XS	125	K	2007 - 2013	FL	

W.K.BIKES

	125	Trail	2011 - 2015	FL	
	125	Wasp (4T)	2013 - 2015	RR	
WK	125	R (4T)	2010 - 2014	RR	
WK	125	Sport	2011 - 2014	RR	
WK	250	Jetmax (4T)	2010 - 2014	FR	
GTR	300		2013 - 2015	RR	

WUYANG

WY	125	24B	2006 - 2007	FL	

XOR

XO		2 (8.0kW)	2013 - 2014	FL	
XO	125	2 (4.0KW)	2013 - 2014	FL	

YAMAHA

TZR	50	R	1993 - 1996	FL	
TZR	50	Thunderkid (41V21) (5DU1/3)	1997 - 2000	FL	
YBR	250	(5D11/3/4)	2007 - 2011	FL	
YS	250	Fazer (Brasil) (1S41/2/3)	2006 - 2008	FL	

ZONTES

ZT	125	-5A Monster	2009 - 2015	FL	RR
ZT	125	-8A Tiger	2009 - 2015	FL	

EQUIVALENTS OEM

06455 KW6 841	06455 KPC 641	06455 GCR 006	3LD W0045 10	3LD W0045 30	06455 KR3 000	06455 KR3 405
43082 0081	43082 0128	43082 1238	43105 LDH1 E00	43105 LFC4 305	43105 SABR Z00M1	43106 SABR Z00M1
43108 H3C 000A	45105 KR3 871	45106 KR3 871	4510A KW6 9000	4510A KFW6 900	45105 KBE 3050 M2	43150 KBE 3060
43150 LDHIE 00	43150 LLS 3050	902 300 1000	45105 KW6 405	45150 LLB5 3050	4510A KFW6 900	06455 KTK 006
4310A BA4 000M1	59100 07810	59100 05820	1S4 W0045 00	59401 HP7 600	252 0033A	43150 LEA5 306
59301 HP7 600	45105 DE3 A00	06455 KW6 843	06455 KW6 844	43082 0080	45105 SEA 0000	45106 SEA 0000
5HH W0045 10	PE802576	59100 21890	45120 T40 0000	59401 HP7 600	06455-KPN-EO1	06455 KPN E02
43082 0172						

PART NUMBER

333

AD	S3	S33 RACING

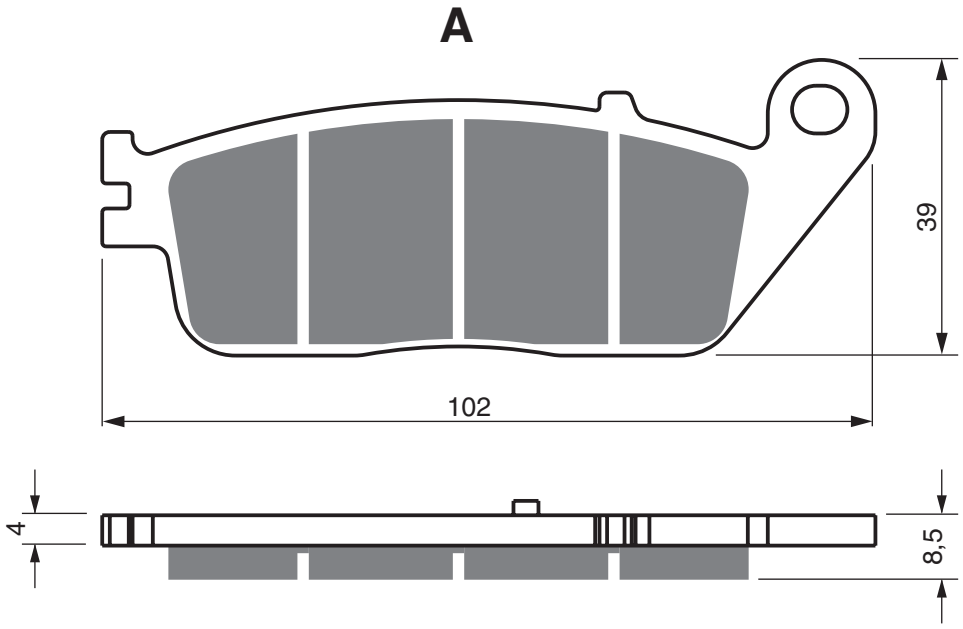

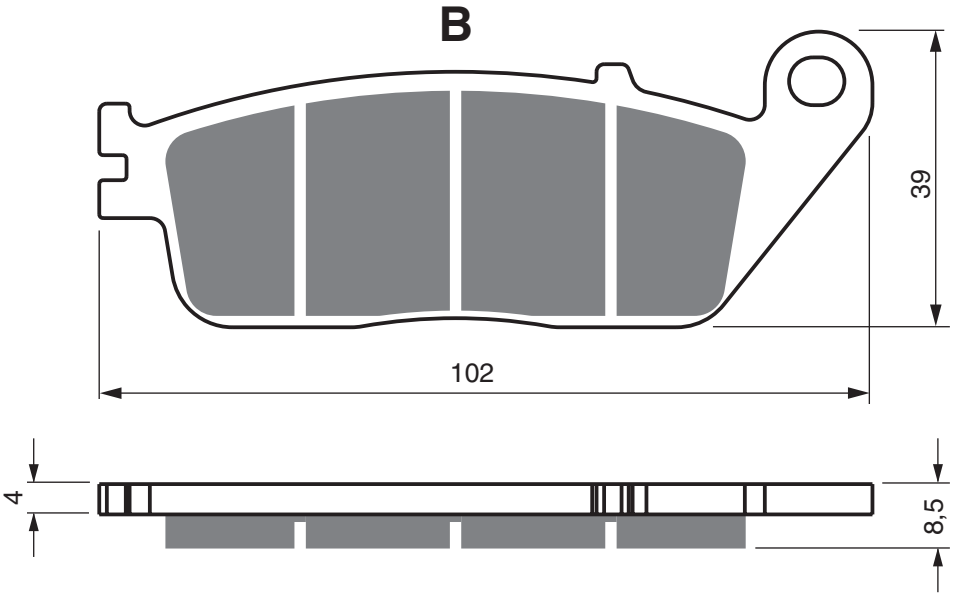

KYMCO

	400	i X-Citing	2012 - 2020	RR
	400	i X-Citing S	2017 - 2020	RR
	500	i X-Citing Evo (ABS)	2013 - 2013	RR
	500	X-Citing (T70000) (Carb Model)	2005 - 2005	RR
	500	X-Citing i (T70020) (EFi Model)	2006 - 2008	RR
	500	X-Citing Ri (T70021)(EFi Model)	2009 - 2015	RR
MX	700	My Road i	2012 - 2015	RR

EQUIVALENTS OEM

43105 LBA2 305	43105LKF 305	430082 Y008

AD | S3 | S33 RACING

PART NUMBER

334

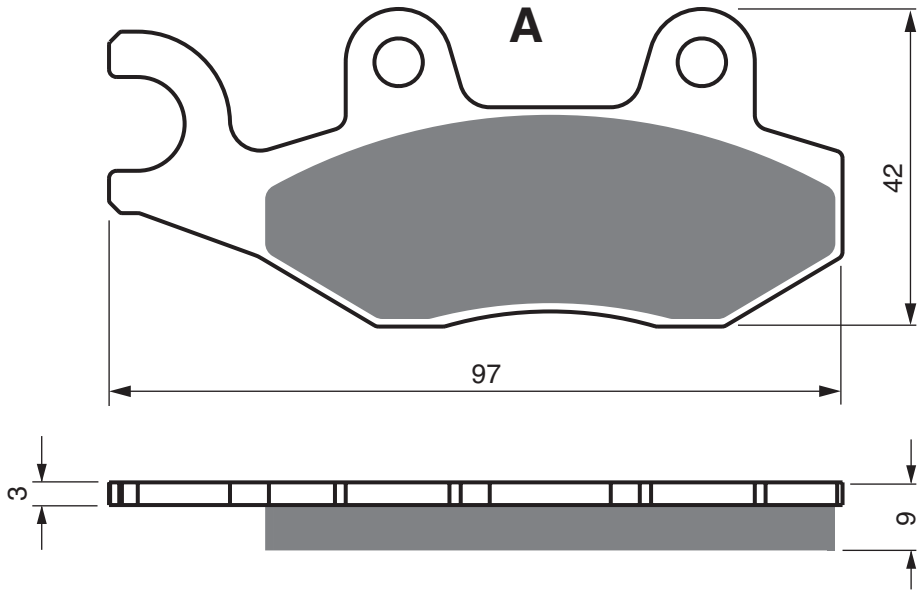

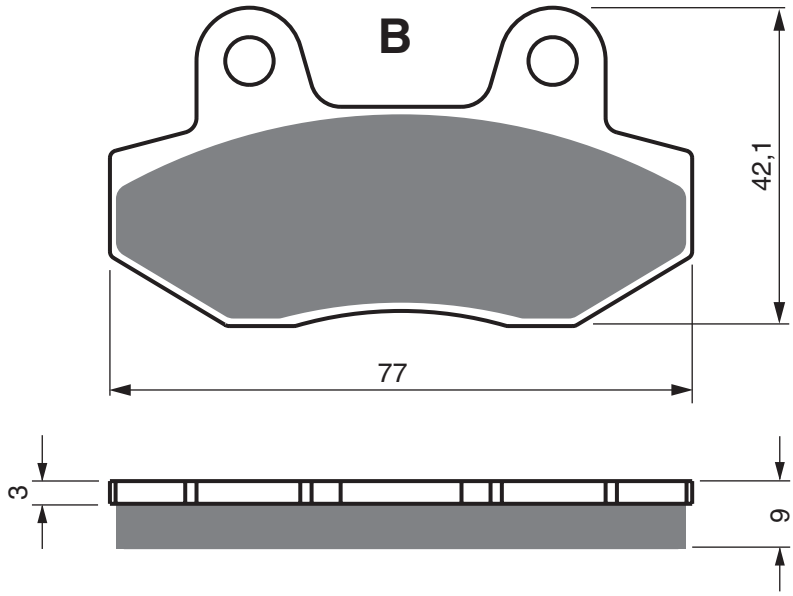

AEON

	125	Elite (4T)	2012 - 2013	FL
	125	MY	-	FL
	125	OZ (4T)	2013 - 2013	FL
	125	Urban (4T)	2012 - 2013	FL
	125	Urban (Scooter)	2011 - 2011	FL
	150	OZ (4T)	2013 - 2013	FL
	200	Elite i (Scooter)	2011 - 2011	FL
	350	i Elite (4T)	2012 - 2013	FL
	350	i Urban (4T)	2013 - 2013	FL
	350	Urban i (Scooter)	2011 - 2011	FL

ASPES

	50	Vega Hybrid	2010 - 2014	FL

BENELLI

	125	Caffe Nero	2011 - 2016	FL	RR
	125	Hobby (4T)	2013 - 2013	FL	RR
	125	Hobby 151 (4T)	2013 - 2013	FL	RR
	125	Macis	2010 - 2016	FL	RR
X	125		2012 - 2014	FL	RR
	150	Caffe Nero	2011 - 2016	FL	RR
	150	Macis	2010 - 2016	FL	RR
X	150		2012 - 2014	FL	RR
	250	Caffe Nero	2008 - 2014	FR	
	350	Zenzero	2012 - 2016	FL	

PART NUMBER

334

AD | S3 | S33 RACING

CAN-AM					
	600	Ryker	2018 - 2019	FR	RR
	900	Ryker	2018 - 2019	FR	RR
CF MOTO					
CF	125	T-21A E-Charm	2010 - 2012	FL	
CF	125	T-22/22A Glory	2010 - 2011	FL	
CF	125	-3A ST Papio	2021 - 2021	FL	
CF	150	T-5i E-Charm	2010 - 2012	FL	
CF	150	T-6/6A Glory	2010 - 2011	FL	
CF	150	T-5i	2010 - 2011	FL	
DAELIM					
SJ	50	A-Four (50 cc)	2006 - 2009	FL	
GENERIC					
	125	Inox (2T)	2012 - 2014	FL	
	125	Zion (Rear Disc model)	2011 - 2016	FL	RR
	125	Zion (Rear drum model)	2008 - 2010	FL	
TR	125	SM (4T)	2012 - 2016	FL	
	150	Zion (Rear Disc Model)	2011 - 2016	FL	RR
	150	Zion (Rear drum model)	2008 - 2010	FL	
HARTFORD					
VR	125	H/X/Z	2004 - 2004	FL	
VR	125	X/H Velo-Cross	2000 - 2003	FL	
VR	125	Z Velo Sport	2000 - 2003	FL	
VR	150	H/X/Z	2004 - 2004	FL	
HONDA					
CA	125	S/T Rebel (JC24/H058)	1995 - 1997	FL	
CMX	250	CT Rebel (Nissin Caliper)	1996 - 1997	FL	
HYOSUNG					
MS3	125	(cc)	2007 - 2009	FL	RR
MS3	250	i	2007 - 2009	FL	RR
KAWASAKI					
KLR	650	(KL 650 E8F/E9F)	2008 - 2009	FL	
KLR	650	ABS	2021 - 2021	RR	
H2	1 000	Ninja H2 SX (ZX1002 AJF)	2018 - 2020	RR	
H2	1 000	Ninja H2 SX SE (ZX1002 BJF)	2018 - 2020	RR	
H2	1 000	Ninja H2 SX SE+ (ZX1002 DKF)	2019 - 2020	RR	
	1 000	Ninja SX	2021 - 2021	RR	
KEEWAY					
	110	Partner	2006 - 2007	FR	
	125	Cityblade	2013 - 2014	FL	
	125	i Silverblade	2013 - 2015	FL	
	125	Logik	2013 - 2015	FL	RR
	125	Outlook	2007 - 2010	FL	RR
	125	Superlight LTD	2007 - 2015	FL	
	150	Cityblade	2013 - 2015	FL	
	150	Logik	2013 - 2015	FL	RR
	150	Outlook	2007 - 2010	FL	RR
	150	Superlight	2007 - 2010	FL	
	250	Cruiser	2009 - 2014	FL	
	250	i Blackster	2014 - 2015	FL	
	250	i Silverblade	2013 - 2014	FL	
	350	i Index	2013 - 2014	FL	
KREIDLER					
	50	Supermoto (2T)	2014 - 2015	FL	
	125	Enduro (4T)	2014 - 2015	FL	
	125	Insignio (4T)	2014 - 2015	FR	
	125	Supermoto (4T)	2014 - 2015	FL	
	250	Insignio (4T)	2014 - 2015	FR	
KYMCO					
	50	Agility (KG10SA)	2005 - 2008	FL	
	50	Agility City+ (4T)	2018 - 2020	FL	
	50	Agility R10 (4T) (CV 50QT S) 10" wheels	2006 - 2014	FL	
	50	Agility R12 (4T) (CV 50QT S) 12" wheels	2006 - 2014	FL	
	50	Filly LX (S210)	2000 - 2006	FL	
	50	Like (2T)	2010 - 2015	FL	
	50	Like LX (4T)	2010 - 2015	FL	
	50	Sento	2008 - 2015	FL	
	50	Vitality (2T) (SF10FA)	2004 - 2009	FL	
	50	Vitality (4T) (U31000)	2004 - 2009	FL	
	50	Yup	2001 - 2009	FL	
RS	50	Agility Naked (2T/12" wheels)	2010 - 2014	FL	
SP	90	Yup	1995 - 1995	FL	
	100	Cobra Racer	1999 - 2003	FL	
	125	Agility 4T (U62000/1 - 12" Wheels/3 Spoke)	2006 - 2014	FL	
	125	Like (LX)	2010 - 2020	FL	
	125	Movie	1999 - 2000	FL	
	125	Stryker	2001 - 2006	FL	
	125	Vivio	2000 - 2003	FL	
RS	125	Agility (4T-12" wheels/ 5 Spooke)	2010 - 2015	FL	
	150	Stryker (Off road)	2000 - 2006	FL	
	150	Vivio	2000 - 2003	FL	
	200	Like i LX	2009 - 2015	FL	
S	250	i People DD	2007 - 2008	FR	
S	300	i People	2008 - 2010	FL	
MALAGUTI					
	125	Blog ie	2009 - 2011	FL	
	125	Centro ie/SL	2007 - 2011	FL	
	160	Blog ie	2009 - 2011	FL	
	160	Centro ie/SL	2007 - 2011	FL	
MASH					
	125	Café Racer	2014 - 2016	FL	
	125	Seventy Five	2014 - 2016	FL	
MZ					
SM	125	(All Models)	2002 - 2007	FL	
SX	125	(All Models)	2002 - 2007	FL	
NIPPONIA					
	125	Duel (4T)	-	FL	
PEUGEOT					
	50	Django Heritage (2T/4T)	2014 - 2018	FL	
	125	Citystar Blue Line (AC/Carb)	2015 - 2015	FL	
	125	Citystar (AC/Carb)	2011 - 2015	FL	
	125	Django Heritage (4T/190mm Rear Disc)	2014 - 2020	FL	
	125	E-Satelis (Electric)	2011 - 2011	FL	RR
	125	Geopolis (Non ABS)(Nissin Caliper)	2007 - 2012	FL	RR
	125	i Citystar	2011 - 2014	FL	
	125	i Citystar (LC)	2013 - 2019	FL	
	125	Satelis Avenue (Nissin Caliper)	2008 - 2009	FL	RR
	125	Satelis Blue Line	2015 - 2015	FL	
	125	Satelis RS (4T)	2013 - 2013	FL	
	125	Vivacity	2010 - 2015	FL	
	125	Vivacity Sixties (4T)	2011 - 2012	FL	
RS	125	Geo (Nissin Caliper)	2007 - 2012	FL	RR
	150	Citystar (AC/Carb)	2011 - 2015	FL	
	150	Citystar i (LC)	2013 - 2015	FL	
	150	Citystar One	2013 - 2014	FL	
	150	Django Heritage (4T/196mm Rear Disc)	2014 - 2020	FL	
	200	Citystar i	2012 - 2018	FL	
	250	Geopolis (Premium/Nissin Calipers/Non ABS)	2007 - 2012	FL	RR
	250	Satelis Premium (Nissin Calipers)	2007 - 2012	FL	RR
RS	250	Geo (Nissin Caliper)	2007 - 2012	FL	RR
RS	250	Satelis (Nissin Calipers)	2007 - 2012	FL	RR
	300	Geopolis	2010 - 2015	FL	RR
	300	Geopolis GT	2014 - 2014	RR	
	300	Geostyle (Nissin Calipers)	2010 - 2012	FL	RR
	300	Satelis (4T)	2013 - 2014	FL	RR
	300	Satelis 2 (4T)	2014 - 2015	FL	RR
RS	300	Geo (Nissin Calipers)	2010 - 2012	FL	RR
	400	Satelis 2 (4T)	2014 - 2015	RR	
	400	Satelis Premium (Nissin Calipers)	2008 - 2011	RR	

AD | S3 | S33 RACING

PART NUMBER

334

	400	Satelis RS (Nissin Calipers)	2008 - 2014	RR	
	400	Satelis Urban (Nissin Calipers/ABS)	2008 - 2012	RR	
RS	400	Geo (Nissin Calipers)	2008 - 2012	FL	RR
RS	400	Satelis 2	2014 - 2015	RR	
	500	Geopolis	2008 - 2011	FR	
	500	Satelis	2007 - 2012	RR	
	500	Satelis RS (Nissin Calipers)	2008 - 2012	RR	

QUADZILLA

WK	300		2006 - 2008	FL	

ROYAL ENFIELD

		Bullet Electra X (All disc models) (Dual Seat)	2005 - 2015	FL	
	500	Bullet Battle Green EFi (Single Seat)	2009 - 2015	FL	
	500	Bullet Classic Chrome EFi (Single Seat)	2009 - 2015	FL	
	500	Bullet Classic EFi (Single Seat)	2009 - 2015	FL	
	500	Bullet Desert Storm (EFi/Single Seat)	2012 - 2015	FL	
	500	Bullet EFi (Dual Seat)	2009 - 2015	FL	
	500	Clubman EFi (Single Seat)	2009 - 2012	FL	
	500	Electra EFI	2009 - 2014	FL	
	500	Fury	2011 - 2012	FL	
	500	Trails EFi	2009 - 2012	FL	
	500	Woodsman EFi	2010 - 2012	FL	

SFM

SFM	125	A8 Roadster	2013 - 2015	FL	

SINNIS

QM	50	Hawk 50 10A-(C)	2008 - 2010	FL	
QM	50	T-10 R Eagle 50	2010 - 2012	FL	
ZN	50	QT-30A Strada 50	2012 - 2014	FL	
QM	125	-2D Stealth	2008 - 2010	FL	
ZN	125	T-30A Strada	2012 - 2014	FL	
ZN	125	T-ES Spirit	2012 - 2014	FL	

SUZUKI

AN	250	8 Skywave SS (CJ46A)	2008 - 2008	FL	
AN	250	Skywave Type M (BA-CJ45SA)	2007 - 2008	FL	
AN	250	Skywave Type S (BA-CJ44A)	2007 - 2008	FL	
AN	400	AK9/ZAK9/AL0/ZAL0/AL1/ZAL1/AL2/AL3/AL4/ZAL4/AL5/ ZAL5/AL6/ZAL6/AL7/ZAL7/AL8/ZAL8/AL9/ZAL9 Skywave/ Burgman/ABS	2009 - 2020	FL	
AN	400	K7/ZK7/K8/ZK8/K9/L0/L1/L2/L3/L4 Burgman/Non ABS/ Skywave	2007 - 2015	FL	

SYM

	125	X-Pro	2011 - 2013	FL	
RS	150		2006 - 2006	RR	

TRIUMPH

	1 200	Tiger XCa	2018 - 2020	RR	
	1 200	Tiger XCx	2018 - 2020	RR	
	1 200	Tiger XR	2018 - 2020	RR	
	1 200	Tiger XRt	2018 - 2020	RR	
	1 200	Tiger XRx	2018 - 2020	RR	
	1 200	Tiger XRx Low	2018 - 2020	RR	
	1 215	Trophy SE	2012 - 2017	RR	
	1 215	Tiger Explorer XC	2016 - 2017	RR	
	1 215	Tiger Explorer XCa	2016 - 2017	RR	
	1 215	Tiger Explorer XCx/XCx Low	2016 - 2017	RR	
	1 215	Tiger Explorer XR	2016 - 2017	RR	
	1 215	Tiger Explorer XRt	2016 - 2017	RR	
	1 215	Tiger Explorer XRx/XRx Low	2016 - 2017	RR	
	1 215	Trophy	2012 - 2016	RR	

VECTRIX

VT-1			2014 - 2014	FL	

VIALLI

	50	Fireforce	2006 - 2006	FL	
DXB	50		2006 - 2006	FL	

W.K.BIKES

WK	125	C (4T) (16" wheel)	2010 - 2015	FL	
WK	125	SC (4T) (14"wheels)	2010 - 2014	FL	
WK	250	Jetmax (4T)	2010 - 2014	FL	

YAMAHA

YBR	125	ED (5HHB/F/H) Brasil (Disc front)	2006 - 2008	FL	

EQUIVALENTS OEM

06455 KEB 900	45105 KCE 3050 M2	45105 KKD 6305	45150 KEC8 3050	902 3002000	59100 05830	45110 K2GP 000
5HH W0045 00	5RM W0045 10	45130T40 000	59401 HP7 600	119 69800	45105 SB3 0001M1	45106 SB3 0001M1
43082 0060	560584	PE 758935	PE 80 2 275	45105 LDC8 305	R1700 7208 0000	45105 LEA1 306
R 800 278	RO 50371008000	1141 40001 100E	6050 080180	45120T58 0000	305128A 003103	45105 KECE 305M2
59301 HP7 600	43082-0179	T2025045	T2022475			

PART NUMBER

335

AD	K5	S3	S33 RACING

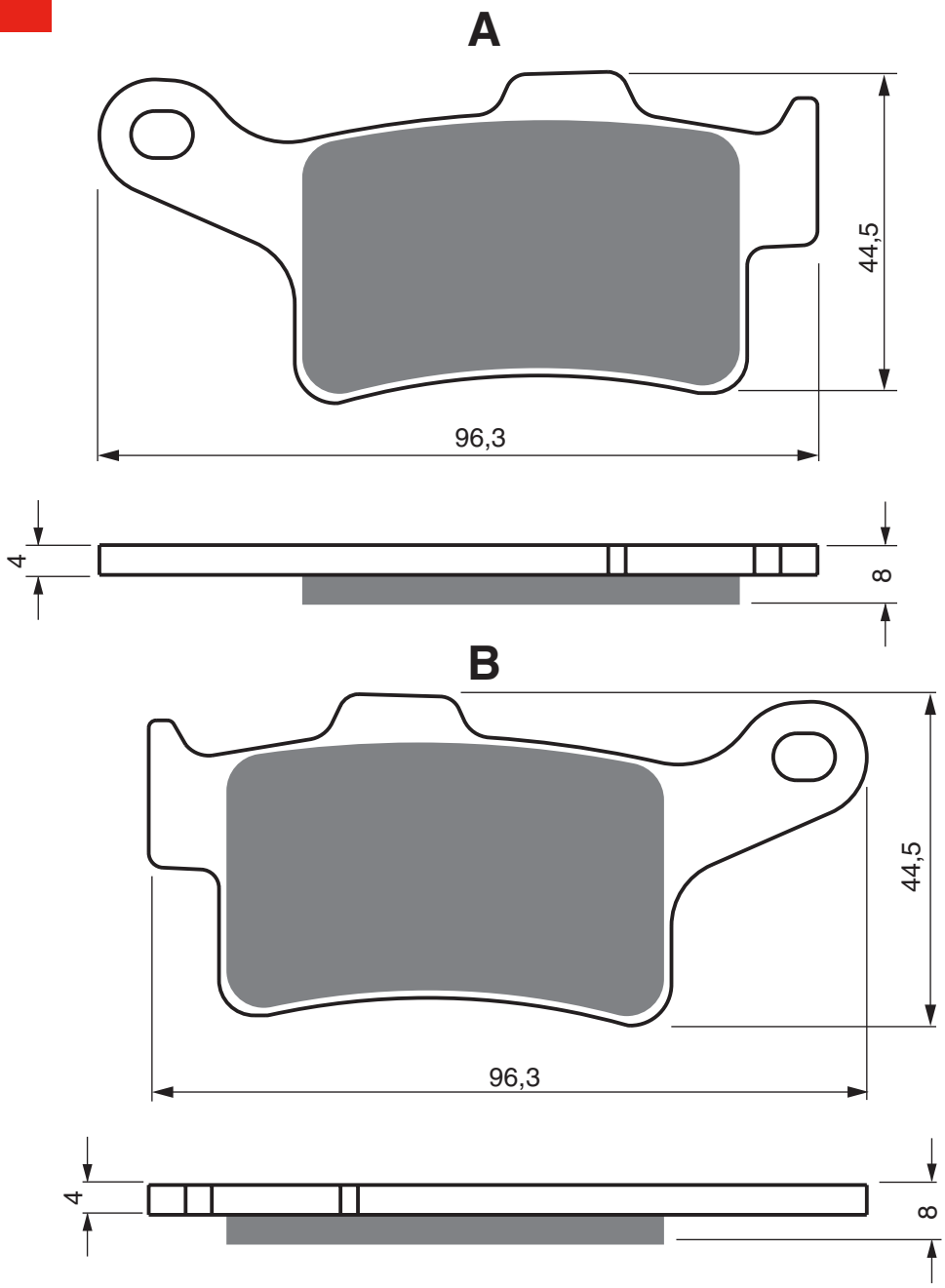

CAN-AM

	Spyder F3 (SE6/SM6)	2015 - 2021	RR
	Spyder F3 LTD	2016 - 2021	RR
	Spyder F3-S (SE6/SM6)	2015 - 2021	RR
	Spyder F3-S (Special Series)	2016 - 2021	RR
	Spyder F3-T	2016 - 2021	RR
	Spyder RS (Brembo Calipers)	2013 - 2016	RR
	Spyder RS-S (Brembo Calipers)	2013 - 2016	RR
	Spyder RT (3 cyl eng/6 speed)	2013 - 2017	RR
	Spyder RT LTD (3 cyl eng/6 speed)	2013 - 2021	RR
	Spyder RT-S (3 Cyl Eng/6 Speed)	2013 - 2015	RR
	Spyder RT-S (Special Series)	2016 - 2017	RR
	Spyder ST (Brembo calipers)	2013 - 2016	RR
	Spyder ST LTD (Brembo calipers)	2013 - 2015	RR
	Spyder ST-S (Brembo calipers)	2013 - 2016	RR
500	Spyder F3-S Daytona	2017 - 2017	RR

EQUIVALENTS OEM

219 800 239

AD	S3	S33 RACING

PART NUMBER

336

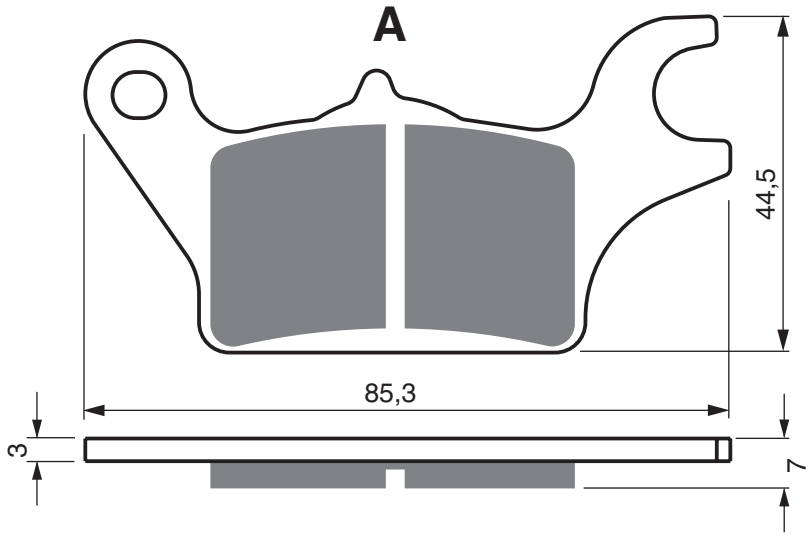

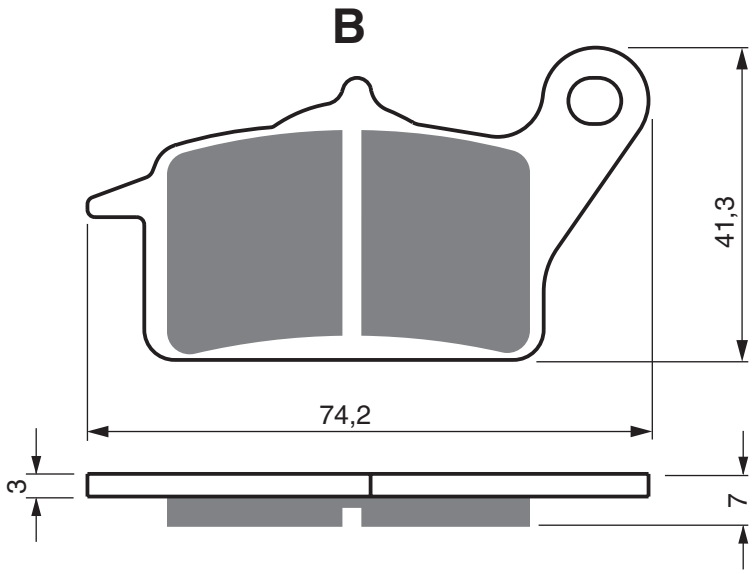

HONDA

	125	Super Cub C (ABS)	2018 - 2021	FL
	125	Super Cub C (ABS) 007	2018 - 2020	FL
CT	125		2020 - 2021	FL

KAWASAKI

Z	125	PRO (BR125 HGF/JHF Manual G/Box)	2016 - 2020	FL
Z	125	Pro SE (BR 125 JJFS Manual G/Box)	2018 - 2020	FL

EQUIVALENTS OEM

06455 KWW C51	430820134

PART NUMBER

337

AD	K1	K5	S3	S33 RACING

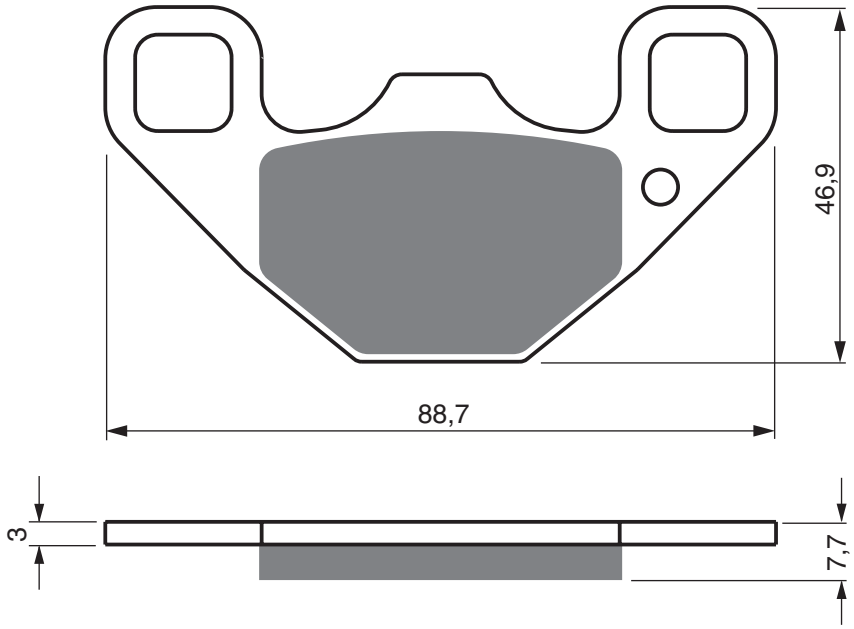

POLARIS

RZR	170	Ranger	2009 - 2014 RR

EQUIVALENTS OEM

43120 214 00 AEON	0454444

AD	K1	K5	S3	S33 RACING

PART NUMBER

338

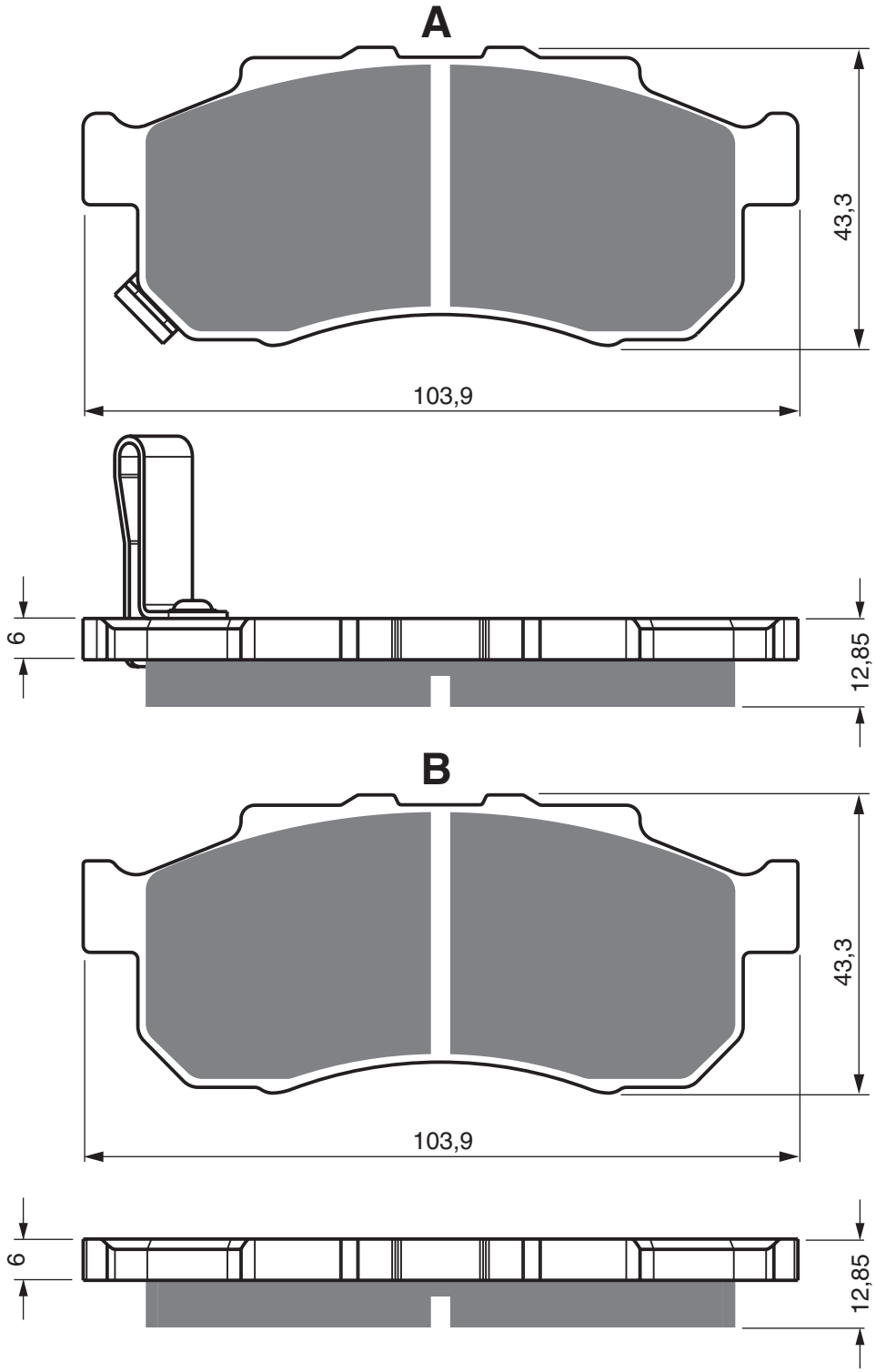

HONDA

MUV	700	-9 Big Red Side x Side	2009 - 2009	FR

EQUIVALENTS OEM

06452 HL1 A01

Disc Brake Pads

PART NUMBER

339

AD	K1	K5	S3	S33 RACING

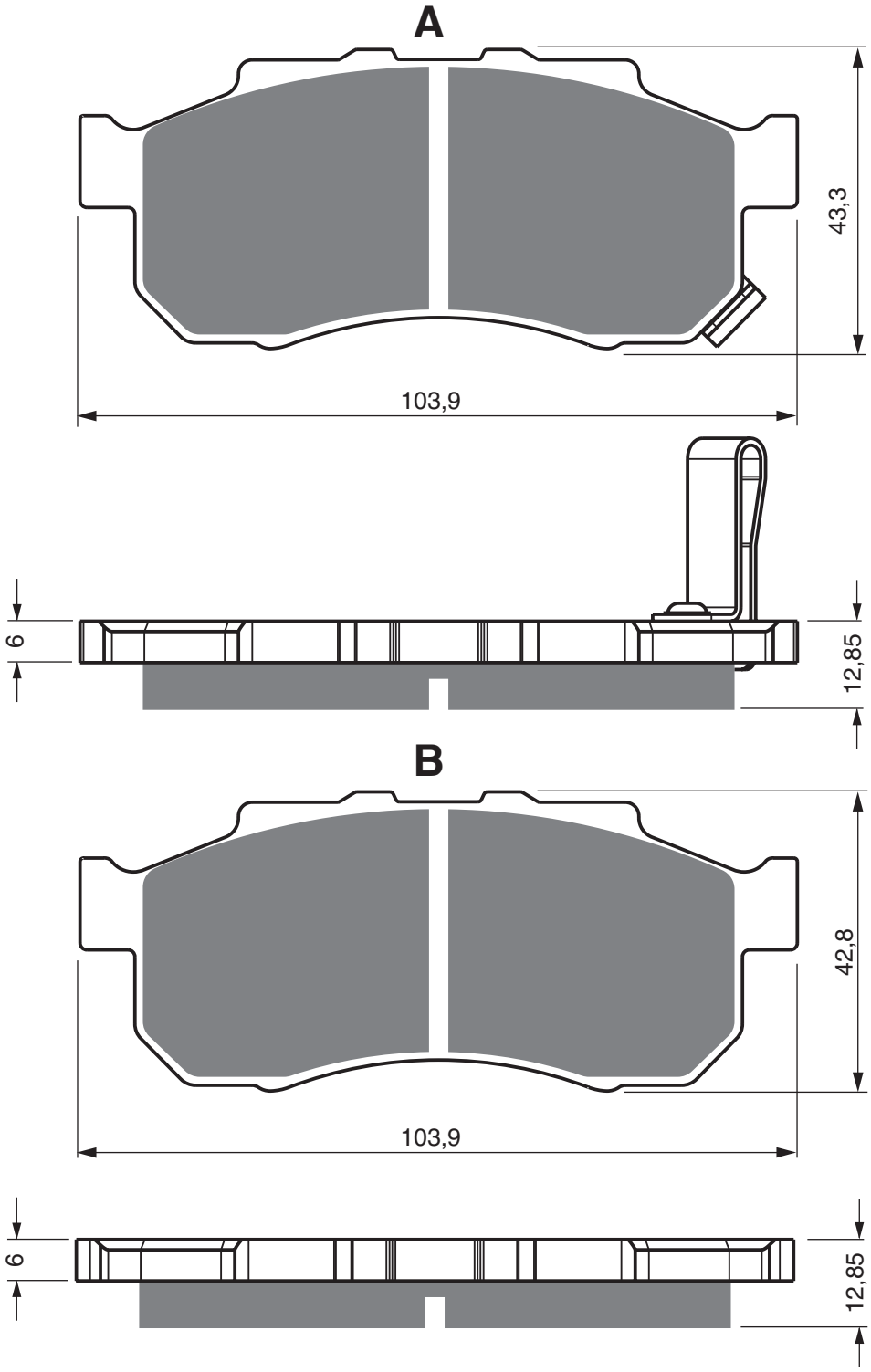

HONDA

MUV	700	-9 Big Red Side x Side	2009 - 2009	FL

EQUIVALENTS OEM

06451 HL1 A01

AD	K1	K5	S3	S33 RACING

PART NUMBER

340

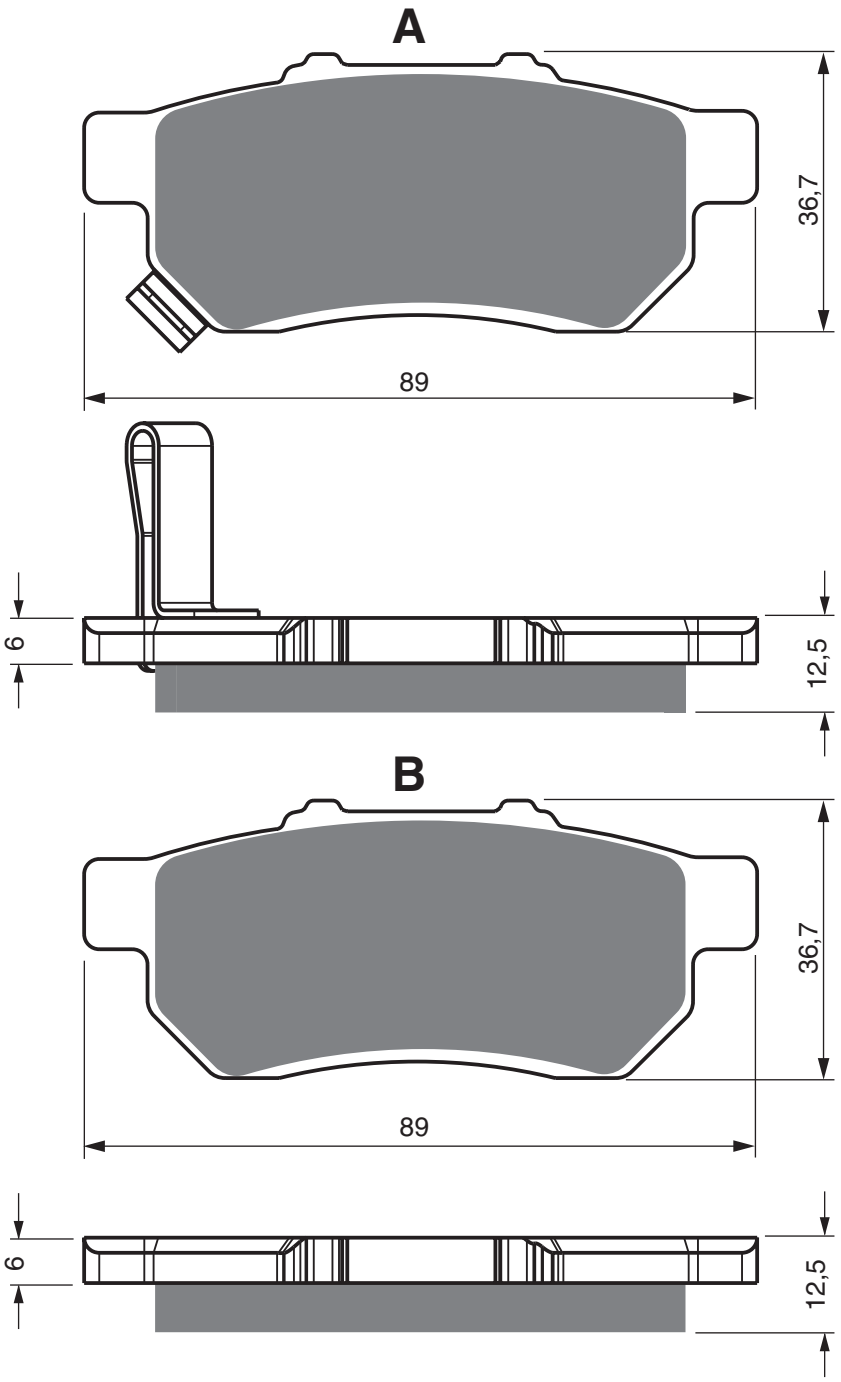

HONDA

MUV	700	-9 Big Red Side x Side	2009 - 2009	RR

EQUIVALENTS OEM

06455 HL1 A01

PART NUMBER

341

AD	K1	K5	S3	S33 RACING

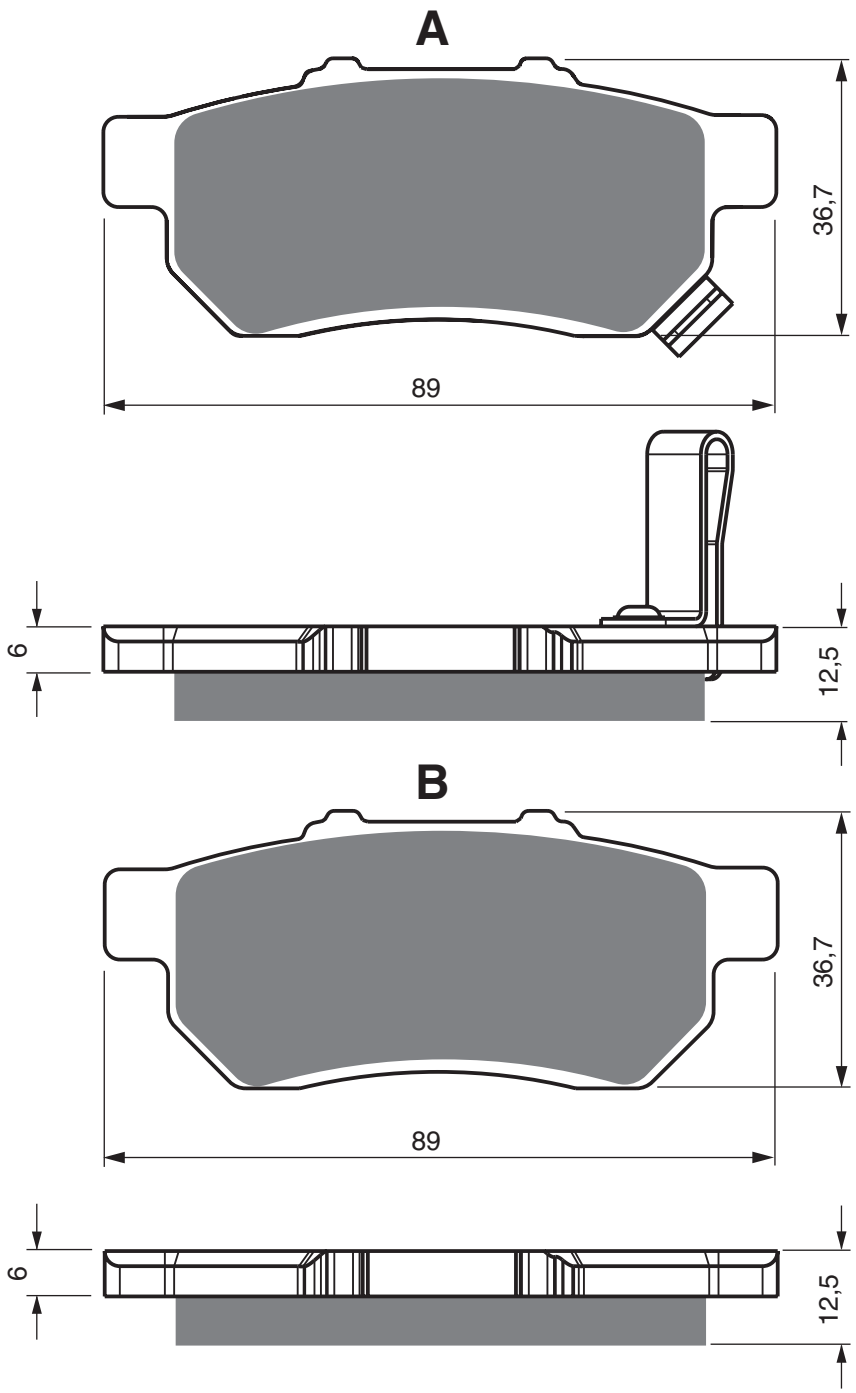

HONDA

MUV	700	-9 Big Red Side x Side	2009 - 2009	RL

EQUIVALENTS OEM

06454 HL1 A01	06454 HL1 A1

AD	K1	K5	S3	S33 RACING

PART NUMBER

342

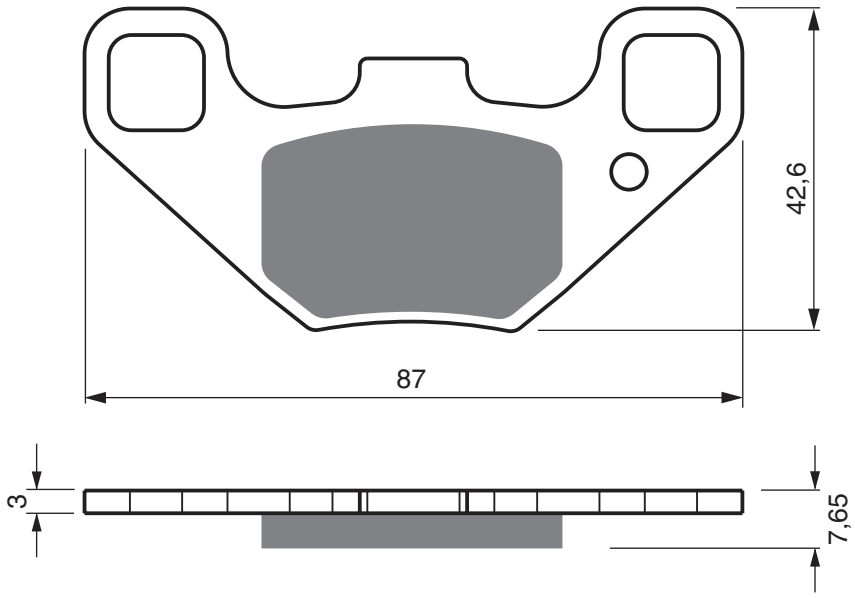

POLARIS

RZR	170	Ranger	2009 -	2014	FL	FR
	200	Phoenix (Rear Drum Model)	2010	2014	FL	FR
	200	Phoenix Quadricycle Model (Rear disc Model)	2010	2010	FL	FR

EQUIVALENTS OEM

43121 205 001 AEON	0454440	0454664

PART NUMBER

343

AD	K5	S3	S33 RACING

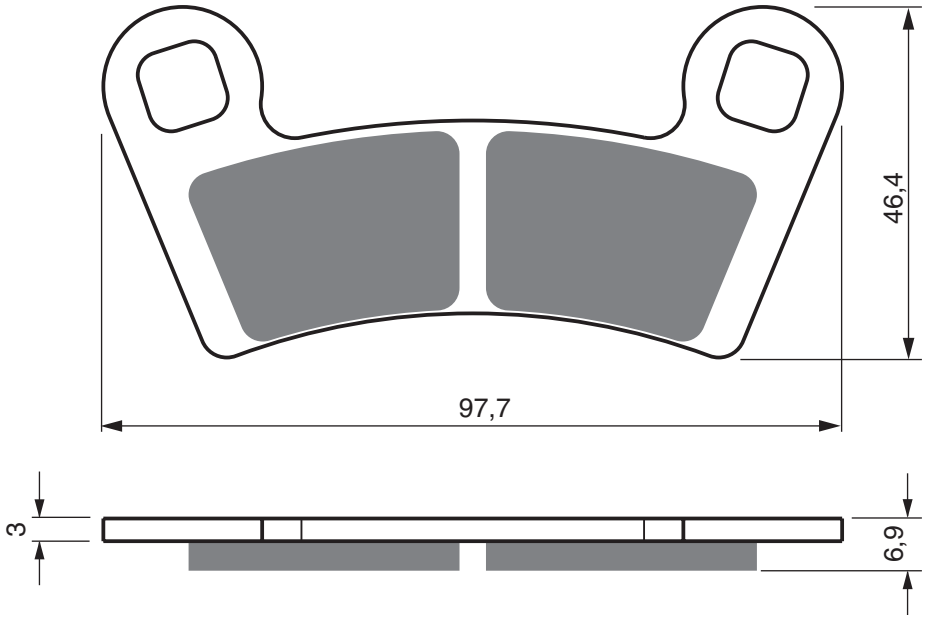

POLARIS

	450	S Outlaw	2008 - 2008	FL	FR	
MXR	450	Outlaw	2009 - 2010	FL	FR	
	525	Outlaw IRS	2008 - 2011	FL	FR	
	525	S Outlaw	2008 - 2010	FL	FR	
RZR	570		2014 - 2020	FL	FR	
RZR	800	Ranger	2008 - 2014	FL	FR	
RZR	900	"50 Inch All Options"	2015 - 2019	FL	FR	RR
RZR	900	S "60 Inch All Options"	2015 - 2019	FL	FR	RR
	1 000	General 4 EPS (4 Seat)	2017 - 2019	RR		
	1 000	General EPS (2 Seat)	2016 - 2016	RR		
	1 000	General EPS (2 Seat)	2017 - 2019	RR		

EQUIVALENTS OEM

1911197	2203318	2203930	1911085

AD | S3

PART NUMBER

344

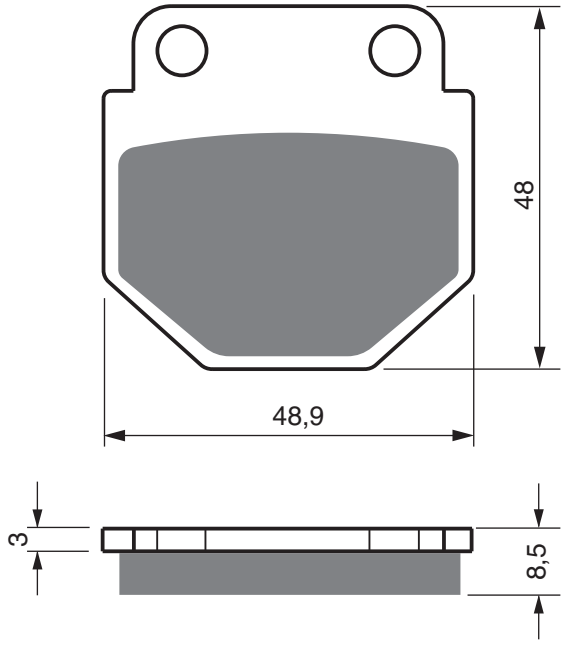

BETTER

BT	125	- 20	2006 - 2009	FL

HANWAY

SM	50	Furious		FL

HONGDOU

GHD	125	-7	2005 - 2007	FL

KYMCO

CK	125	Pulsar	1999 - 2000	FL

ZING BIKES

	150	Vogue (3 wheeler)	2008 - 2009	FL

EQUIVALENTS OEM

45105 KBH E000 GM

PART NUMBER

345

AD	K5	S3	S33 RACING

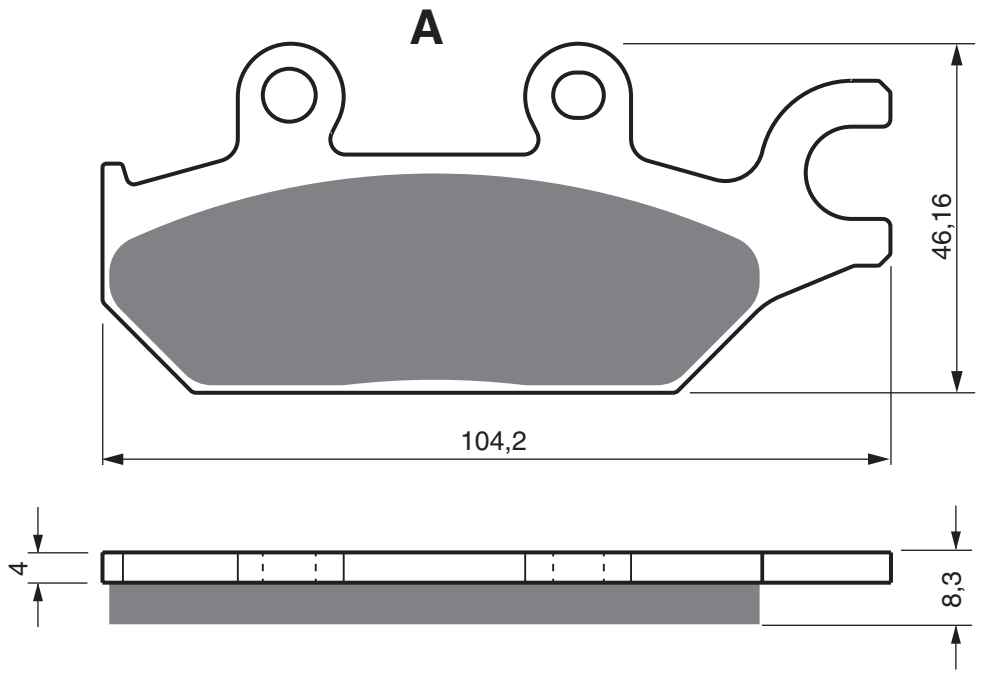

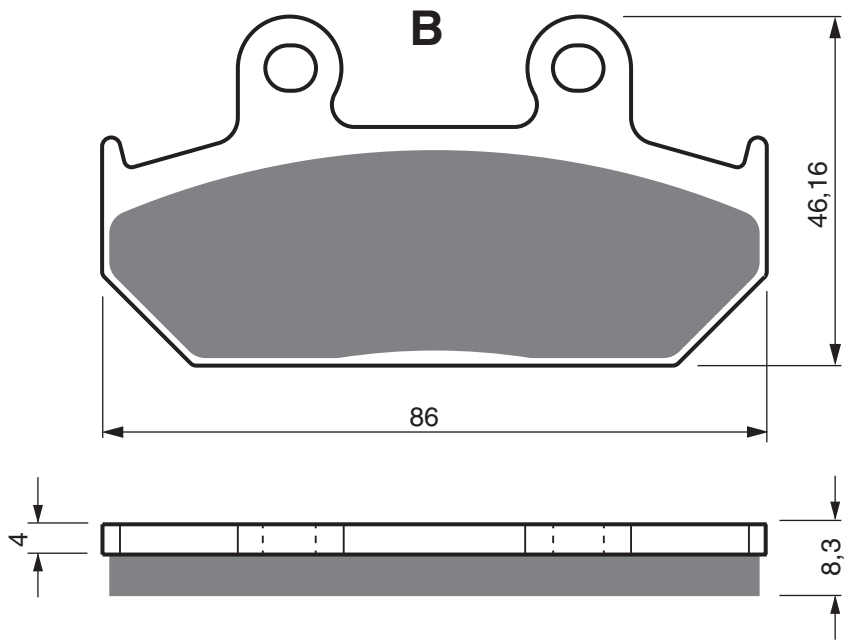

CAN-AM

1 000	Commander Max DPS/XT	2014 - 2017	FL
1 000	Commander R EFI	2018 - 2019	FL
1 000	Maverick Max	2016 - 2017	FL
1 000	Maverick Max STD/XRS/DPS	2015 - 2016	FL

YAMAHA

YXC	700	E Viking VI EPS (YXC700PF/PXG/PXH/PXJ)	2015 - 2018	FL
YXM	700	E Viking EPS COMO (YXM70VPHG)	2016 - 2016	FL
YXM	700	E Wolverine R (YXE70WPHG)	2016 - 2016	FL
YXM	700	ES - Viking EPS SE (YXM700PSE)	2014 - 2016	FL

EQUIVALENTS OEM

1XD25805	00705601149

AD	K1	K5	S3	S33 RACING

PART NUMBER

346

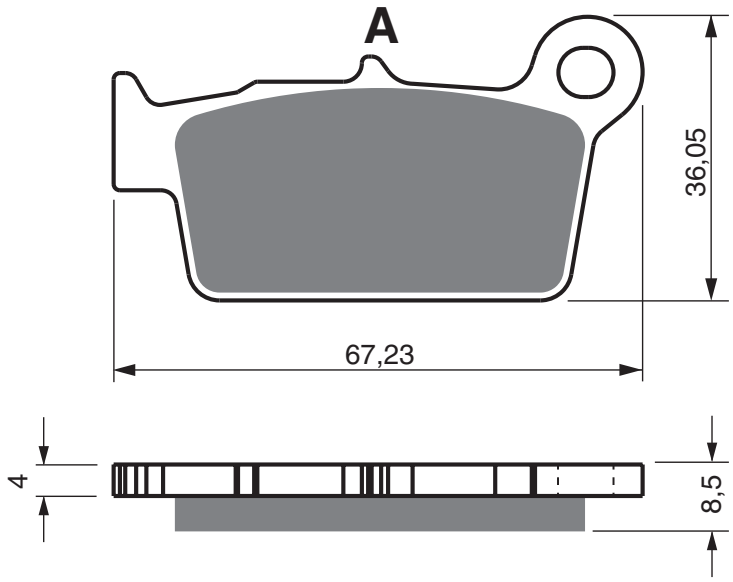

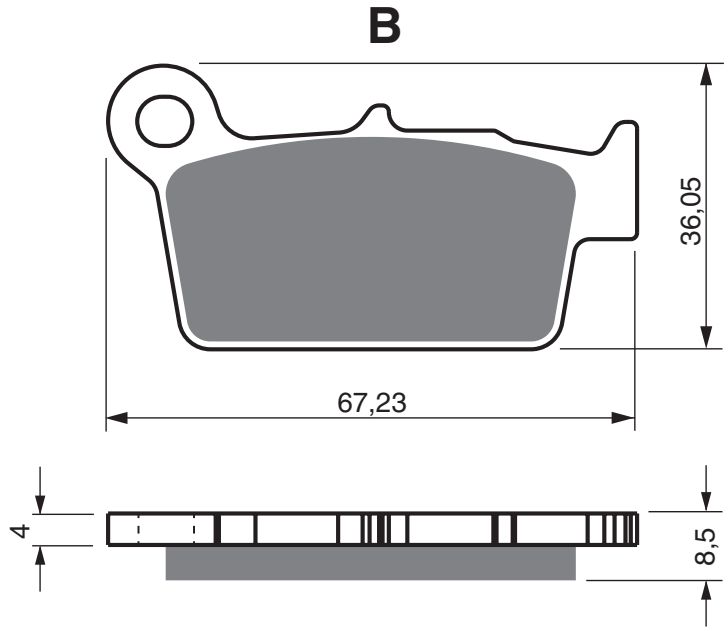

BETA

RR	50	Enduro	2008 - 2020	RR
RR	50	Enduro Factory	2012 - 2020	RR
RR	50	Enduro Standard	2009 - 2014	RR
RR	50	Motard (Spoke Wheels)	2009 - 2012	RR
RR	50	Motard Skull	2011 - 2011	RR
RR	50	Motard Sport (Cast wheel 5 spoke)	2014 - 2020	RR
RR	50	Motard Standard	2009 - 2012	RR
RR	50	Motard Standard (Cast wheel 5 spoke)	2013 - 2014	RR
RR	50	Motard Track (Cast wheels)	2008 - 2014	RR
RR	50	Motard Track/Racing (Spoke Wheels)	2014 - 2020	RR
RR	50	Standard	2009 - 2014	RR
RR	50	Track (Spoke wheel)	2014 - 2014	RR
	125	Urban	2008 - 2015	RR
	125	Urban Special	2009 - 2015	RR
ALP	125	(4T)	2005 - 2015	RR
RR	125	(2T) Inc MY20	2018 - 2020	RR
RR	125	4T Enduro (A/C)	2008 - 2014	RR
RR	125	4T Enduro (A/C]	2009 - 2014	RR
RR	125	4T Enduro (LC)	2011 - 2018	RR
RR	125	4T Motard (A/C Spoke Wheel)	2008 - 2014	RR
RR	125	Enduro LC (2T) MY20	2020 - 2020	RR
RR	125	Motard 4T (LC) (Cast wheels)	2011 - 2018	RR
	200	Urban	2008 - 2015	RR

PART NUMBER

346

AD	K1	K5	S3	S33 RACING

	200	Urban Special	2009 - 2015	RR
ALP	200	(4T)	2005 - 2020	RR
RR	200	Enduro (2T) MY20	2020 - 2020	RR
RR	250	Enduro (2T)	2013 - 2014	RR
RR	250	Enduro (2T) MY20	2020 - 2020	RR
RR	250	Enduro (4T)	2005 - 2007	RR
RR	250	Enduro Racing (2T)	2014 - 2014	RR
RR	250	Enduro RC (2T)	2018 - 2020	RR
RR	250	Racing (2T)	2015 - 2015	RR
	250	X-Trainer (2T)	2020 - 2021	RR
	300	X-Trainer (2T)	2015 - 2020	RR
RR	300	Enduro (2T)	2013 - 2014	RR
RR	300	Enduro (2T)	2018 - 2021	RR
RR	300	Enduro (2T) MY20	2020 - 2021	RR
RR	300	Enduro (2T) RC	2018 - 2021	RR
RR	300	Enduro Racing (2T)	2013 - 2014	RR
RR	300	Racing (2T)	2015 - 2015	RR
ALP	350	4.0 (4T / 349cc)	2005 - 2015	RR
M4	350	4.0 Motard	2007 - 2015	RR
RR	350	(4T) MY20	2020 - 2021	RR
RR	350	EFi (4T)	2015 - 2015	RR
RR	350	Enduro	2012 - 2012	RR
RR	350	Enduro	2013 - 2014	RR
RR	350	Enduro (4T)	2011 - 2014	RR
RR	350	Enduro (4T) Racing	2015 - 2020	RR
RR	350	Racing (4T)	2015 - 2015	RR
RR	390	(4T)	2015 - 2020	RR
RR	390	Enduro (4T) MY20	2020 - 2021	RR
RR	400	4T Enduro	2005 - 2011	RR
RR	400	Enduro (4T)	2012 - 2014	RR
RR	430	(4T)	2015 - 2015	RR
RR	430	Enduro (4T) MY20	2020 - 2020	RR
RR	450	Cross Country (4T)	2012 - 2012	RR
RR	450	Enduro (4T)	2005 - 2011	RR
RR	450	Enduro (4T)	2012 - 2014	RR
RR	450	Enduro Racing (4T)	2015 - 2020	RR
RR	480	(4T)	2015 - 2020	RR
RR	480	Enduro (4T) MY20	2020 - 2020	RR
RR	480	Racing (4T)	2015 - 2020	RR
RR	490	Enduro Racing (4T)	2013 - 2014	RR
RR	498	Enduro (4T)	2012 - 2012	RR
RR	498	Enduro (4T)	2013 - 2014	RR
RR	498	Enduro Racing (4T)	2013 - 2014	RR
RR-S	500	(4T)	2020 - 2021	RR
RR	520	Enduro 4T	2010 - 2011	RR
RR	525	Enduro (4T)	2005 - 2009	RR
KTM				
SX	85	(Aftermarket Caliper used with 220mm Disc)	2003 - 2017	RR
RIEJU				
MTR	50	Pro Competizione (Spoke wheel)	2011 - 2014	RR
	125	Marathon Pro Competizione	2011 - 2014	RR

EQUIVALENTS OEM

2525345000	2525362000

AD	K1	K5	S3	S33 RACING

PART NUMBER

347

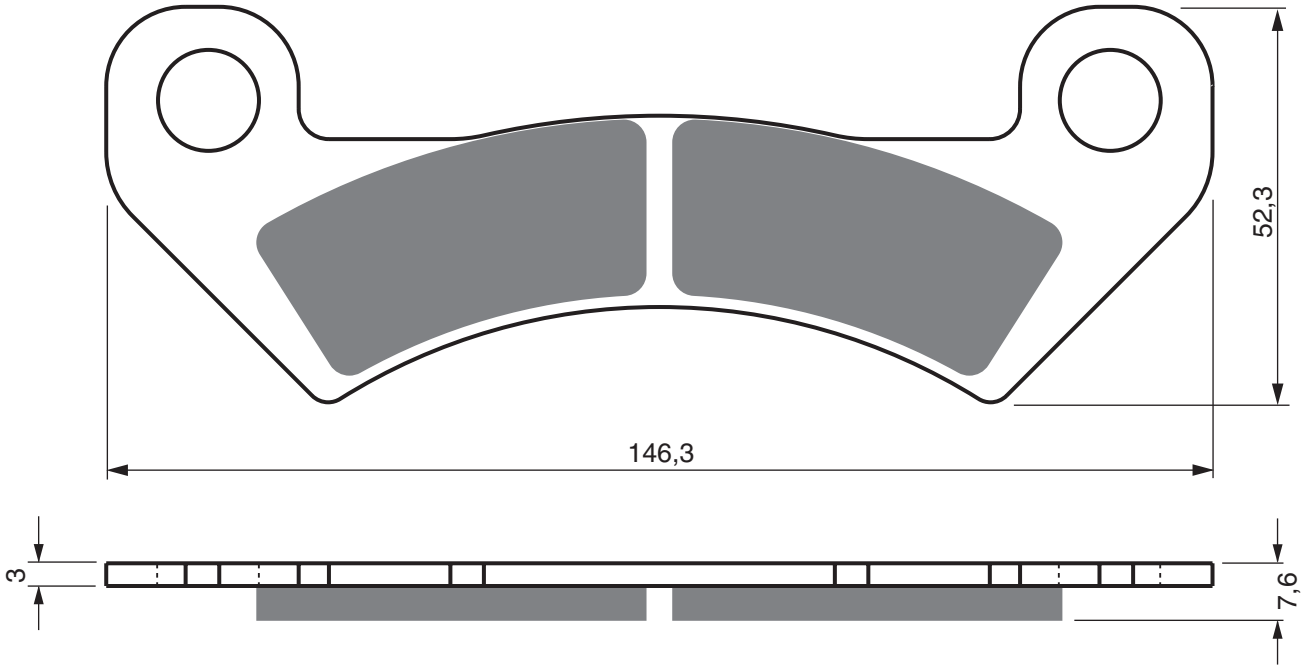

ARCTIC CAT

	1 000	Wildcat 4	2013 - 2016	FL	FR
	1 000	Wildcat 4X	2014 - 2016	FL	FR
	1 000	Wildcat 4X LTD	2014 - 2015	FL	FR

JOHN DEERE

XUV	625	i Gator (Petrol)	2011 - 2011	FL	FR
XUV	825	i Gator (Petrol)	2011 - 2011	FL	FR
XUV	855	D Gator (Diesel)	2011 - 2011	FL	FR

EQUIVALENTS OEM

AM 14 060 7

PART NUMBER

348

AD	S3	S33 RACING

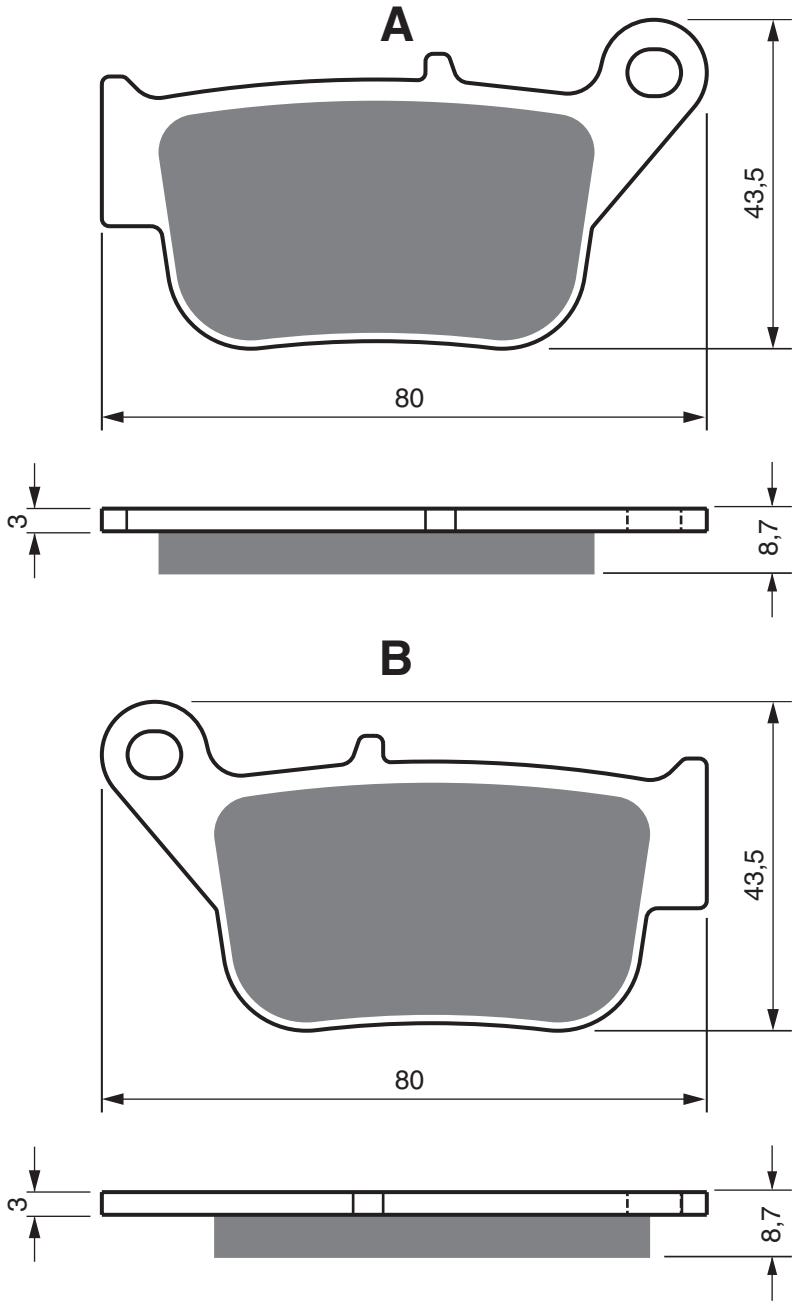

YAMAHA

X-MAX	250	(2DL/Non ABS/HengTong R-Caliper)	2014 - 2016	RR
YP	250	R X-MAX (2DL / Non ABS / Heng Tong R-Caliper)	2014 - 2016	RR

EQUIVALENTS OEM

2DL F5811 00

Disc Brake Pads

AD | S3 | S33 RACING

PART NUMBER

349

A

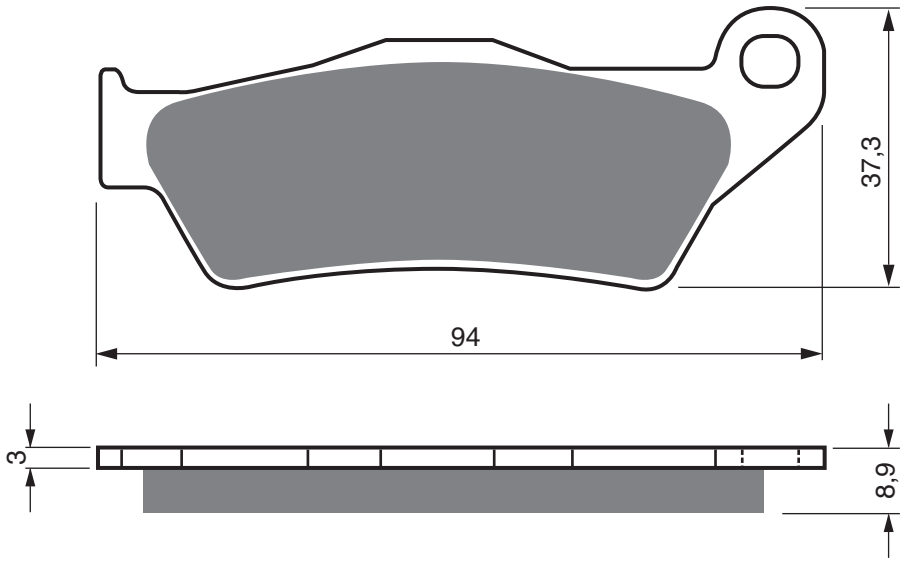

B

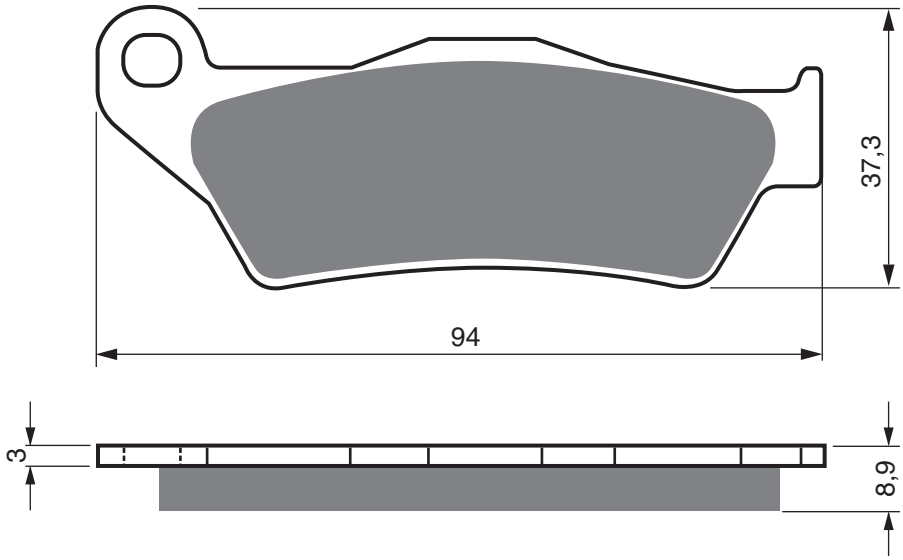

HARLEY DAVIDSON

XG	500	Street (549cc X-Engine)	2014 - 2015	FL	RR
XG	750	Street (749cc X-Engine)	2014 - 2015	FL	RR

EQUIVALENTS OEM

413 00072

Disc Brake Pads

PART NUMBER

350

AD | S3

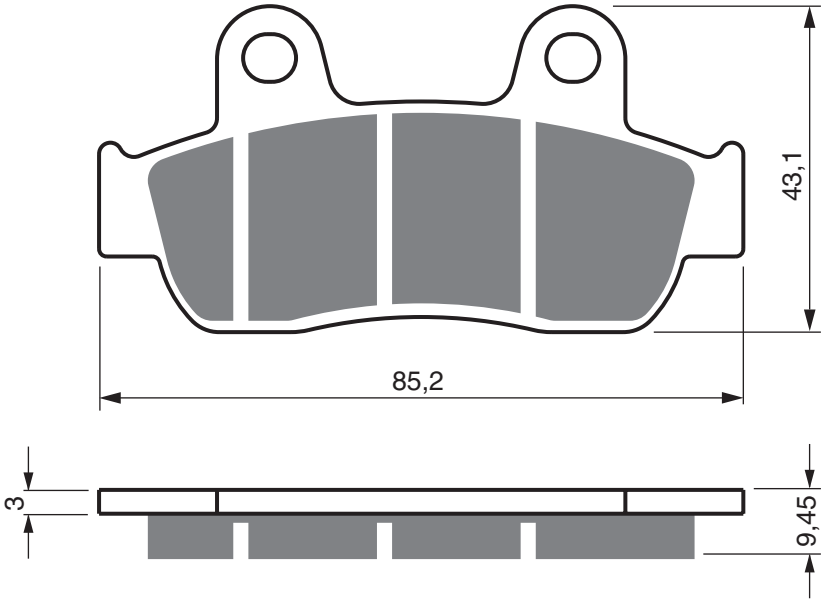

HONDA

111	Spacy (SCR1105WHF) - Korea	2015 - 2015	FL
112	Spacy (SCR1105WHF) - Turkey	2015 - 2015	FL
125	Elite (CHA1253WHE) - Argentina	2014 - 2014	FL
125	Elite (CHA1253WHE) - Colombia	2014 - 2014	FL
125	Elite (CHA1253WHE) - General Export KM/H	2014 - 2014	FL
125	Elite (CHA1253WHE) - Latin America	2014 - 2014	FL
125	Elite (CHA1253WHE) - South Africa	2014 - 2014	FL

EQUIVALENTS OEM

06455-KSY-902

AD | S3

PART NUMBER

351

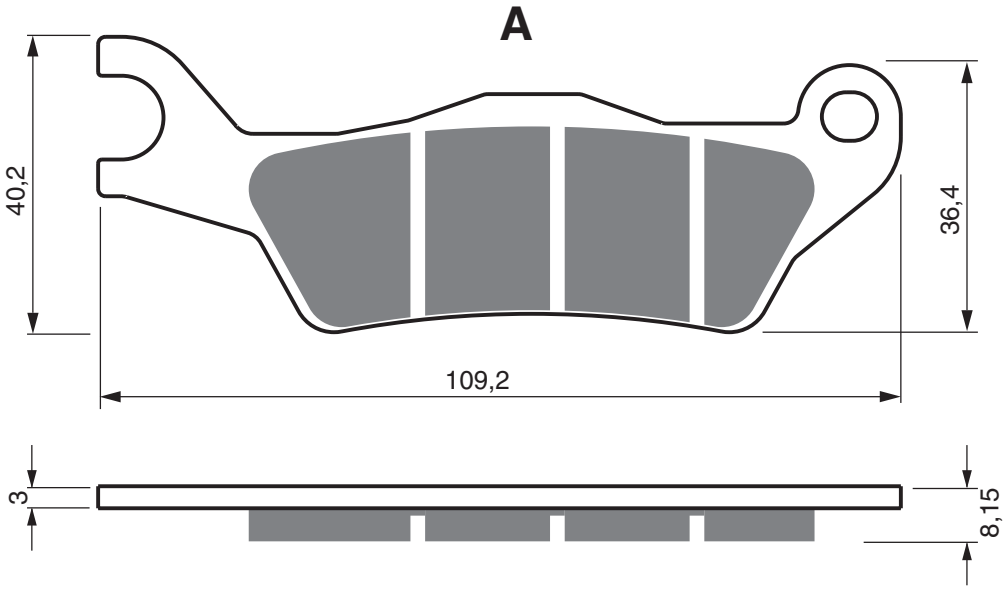

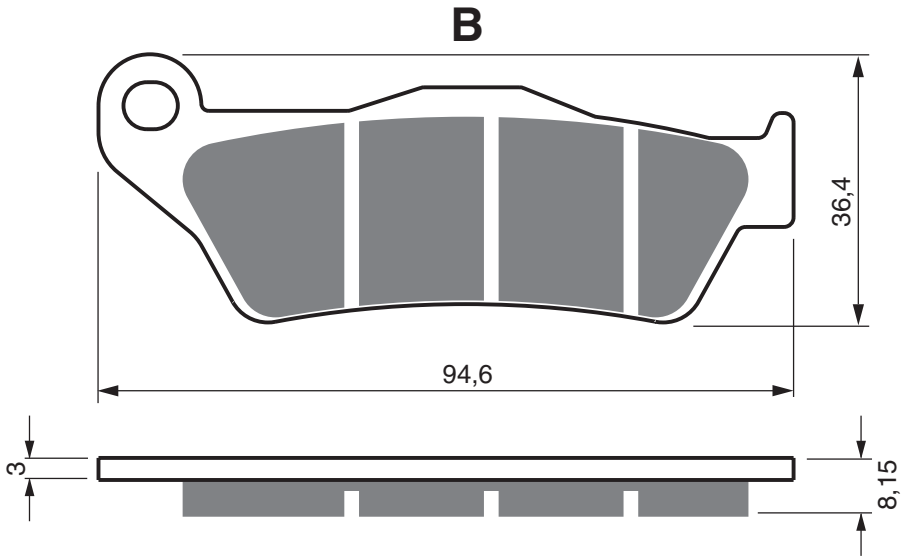

SUZUKI

GS	150	R South Africa	2015 - 2015	FL

EQUIVALENTS OEM

59301-30810-000

PART NUMBER

352

AD | S3 | S33 RACING

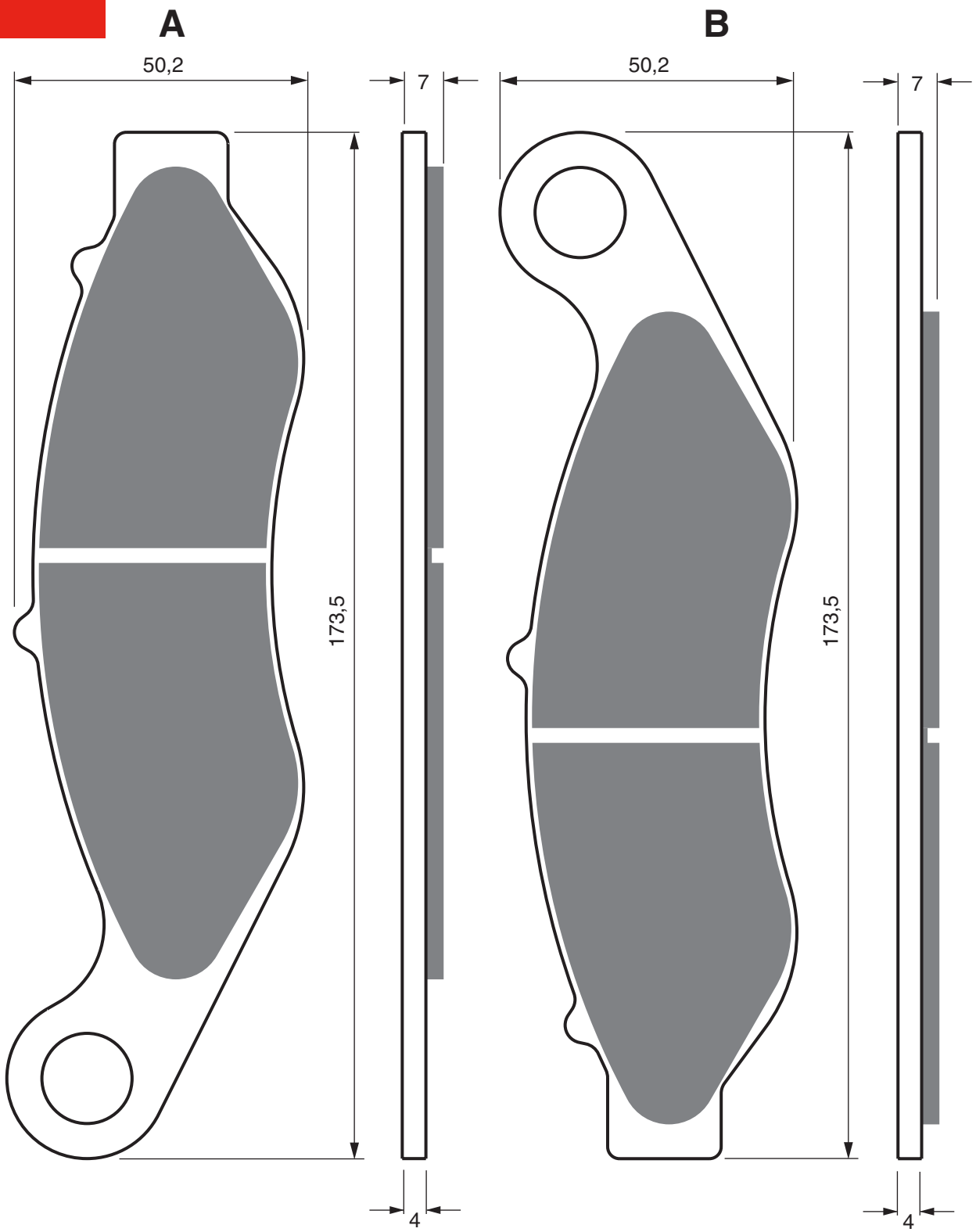

HARLEY DAVIDSON

FLHTCUTG	Tri Glide Ultra Trike Anniversary	2018 - 2018	FR	
FLHTCUTG 1 690	Trike Tri Glide Ultra	2014 - 2020	FL	FR
FLRT 1 690	Freewheeler Trike	2015 - 2020	FL	FR

EQUIVALENTS OEM

41 300 027

AD | S3 | S33 RACING

1 set = 4 pcs

PART NUMBER

353

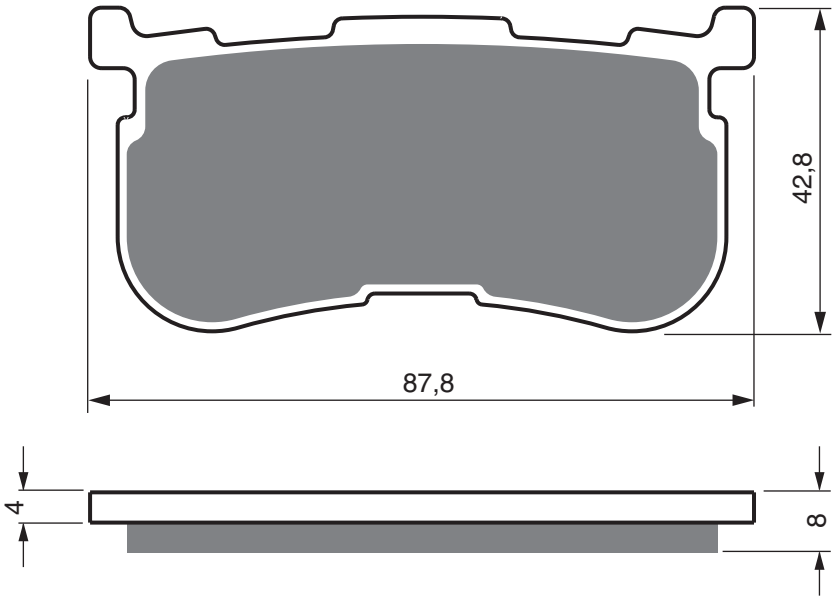

HARLEY DAVIDSON

FLHTCUTG		Tri Glide Ultra Trike Anniversary	2018 - 2018	RR
FLHTCUTG	1 690	Trike Tri Glide Ultra	2014 - 2020	RR
FLRT	1 690	Freewheeler Trike	2015 - 2020	RL RR

EQUIVALENTS OEM

41 300 033

Disc Brake Pads

PART NUMBER

354

AD	S3	S33 RACING

1 set = 4 pcs

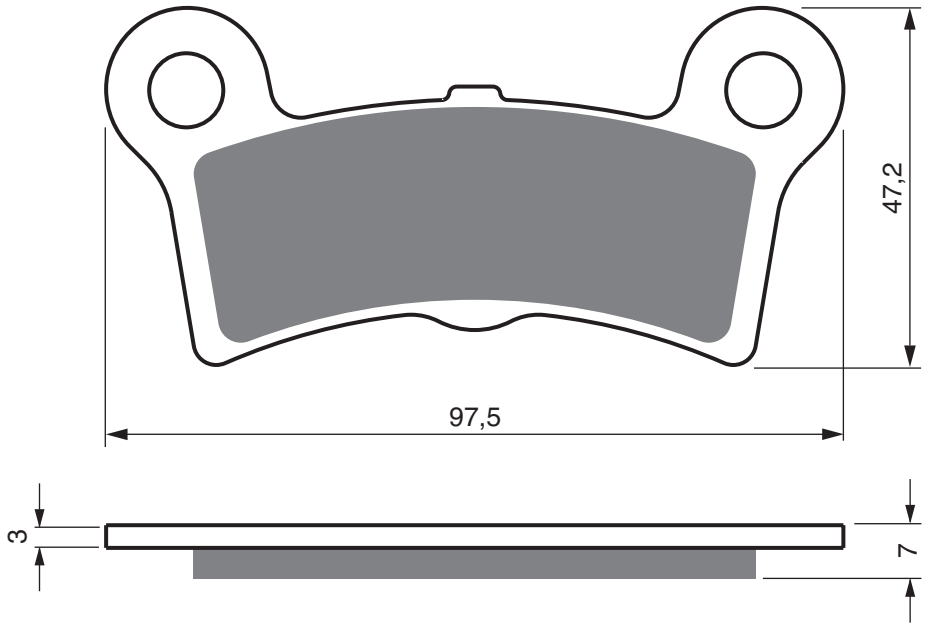

HARLEY DAVIDSON

FLHTCUTG	1 690	Tri Glide Ultra Classic Trike	2009 - 2013	RL	RR
FLHXXX	1 690	Street Glide Trike	2010 - 2011	RL	RR

EQUIVALENTS OEM

83911-09	83911-09B

AD	S3	S33 RACING

PART NUMBER

355

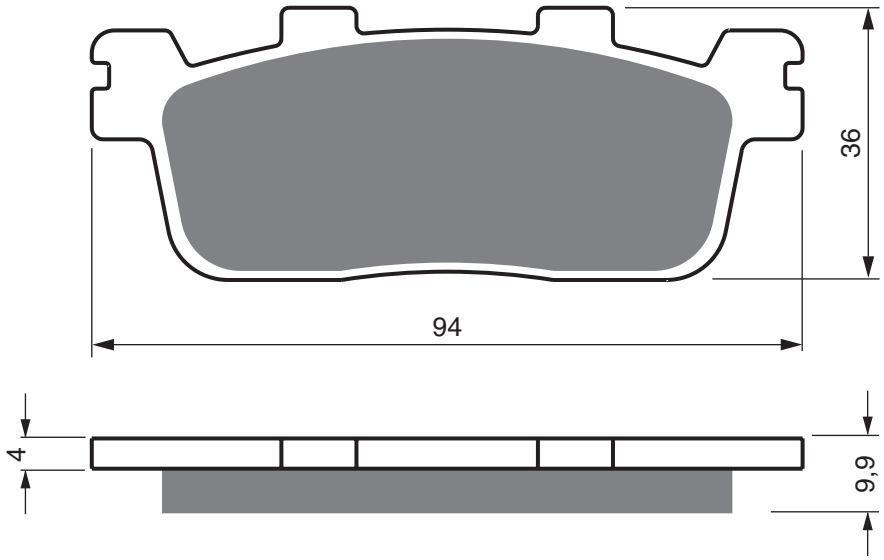

KYMCO

	125	i X Town ABS	2016 - 2020	RR
	125	New Downtown i	2015 - 2020	RR
	125	New X Town ABS	2016 - 2018	RR
	125	People GTi	2010 - 2015	RR
	125	People S DD (Rear Disc Model) (5 Bolt Fixing)	2007 - 2020	RR
K-XCT	125	i	2012 - 2015	RR
	200	People S i DD (D12000) (5 bolt ixing disc)	2007 - 2015	RR
	200	People GTi	2010 - 2015	RR
	250	i X-Citing (T71000)	2006 - 2008	RR
	250	X-Citing (T71000)	2005 - 2005	RR
S	250	i People DD	2007 - 2008	RR
	300	Grand Dink i	2012 - 2020	RR
	300	People GTi	2010 - 2015	RR
	300	X Town i	2017 - 2020	RR
	300	X-Citing i (T72000 - EFi Model)	2008 - 2008	RR
	300	X-Citing i R (T720001/T72011)	2009 - 2014	RR
	300	Agility Max i(ABS)	2015 - 2015	RR
K-XCT	300	i (ABS)	2012 - 2015	RR
S	300	i People	2008 - 2010	RR
	350	New Downtown i	2015 - 2020	RR

YAMAHA

XP	400	X-MAX Momo Design (ABS)	2015 - 2015	RR

EQUIVALENTS OEM

43105 LDH1 E00	43105 LGE5 305	43082 Y008	43082 Y006	1SD FS911 00

PART NUMBER

356

AD	K1	K5	S3	S33 RACING

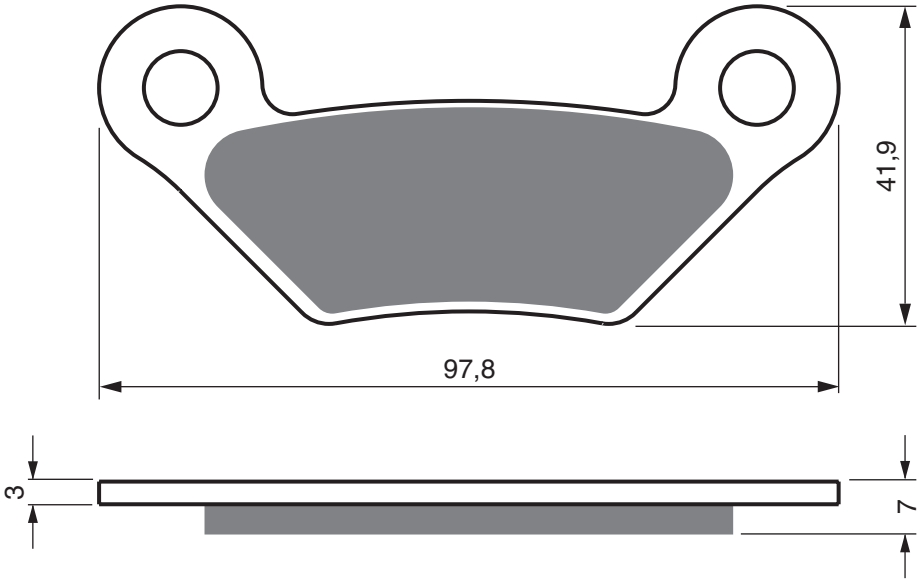

JCB (UTILITY VEHICLES)

800	D Groundhog (4x4)	2008 - 2009	FL	FR	RR
800	D Workmax (4x4)	2010 - 2014	FL	FR	RR
1 000	D Groundhog (4x4)	2008 - 2009	FL	FR	RR
1 000	D Groundhog (6x4)	2008 - 2009	FL	FR	RR
1 000	D Workmax (4x4)	2010 - 2014	FL	FR	RR
1 000	D Workmax (6x4)	2010 - 2014	FL	FR	RR

JOHN DEERE

HPX	4x4 Gator (Diesel)	2010 - 2011	FL	FR	RR
XUV 620	i Gator (Petrol)	2010 - 2010	FL	FR	RR
XUV 625	i Gator (Petrol)	2011 - 2011	RR		
XUV 825	i Gator (Petrol)	2011 - 2011	RR		
XUV 850	D Gator (Petrol)	2010 - 2010	FL	FR	RR
XUV 855	D Gator (Diesel)	2011 - 2011	RR		

EQUIVALENTS OEM

AM141182

AD | S3 | S33 RACING

PART NUMBER

357

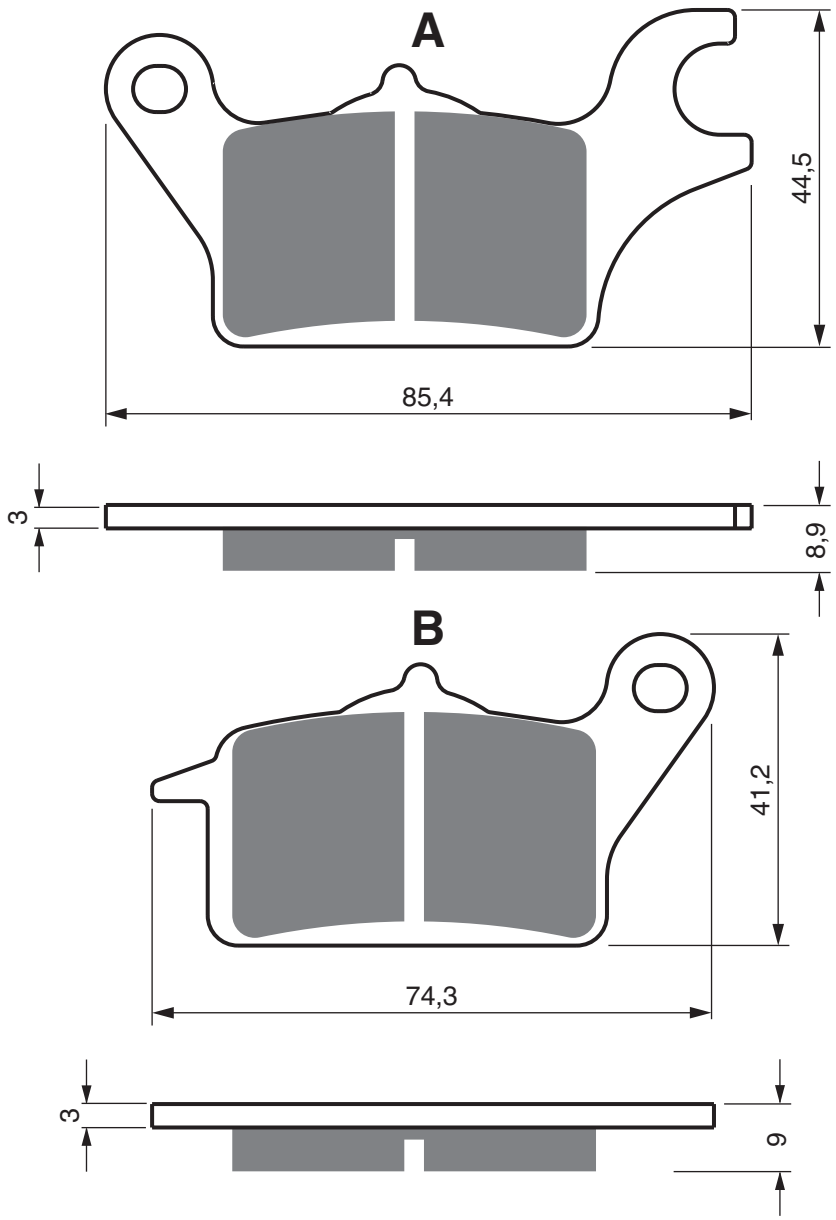

YAMAHA

MW	125	Tricity Scooter	2014 - 2016	FR
MWS	125	Tricity Scooter (3 Wheeler)	2017 - 2018	FR

EQUIVALENTS OEM

2CM F5805 10

PART NUMBER

358

AD | S3 | S33 RACING

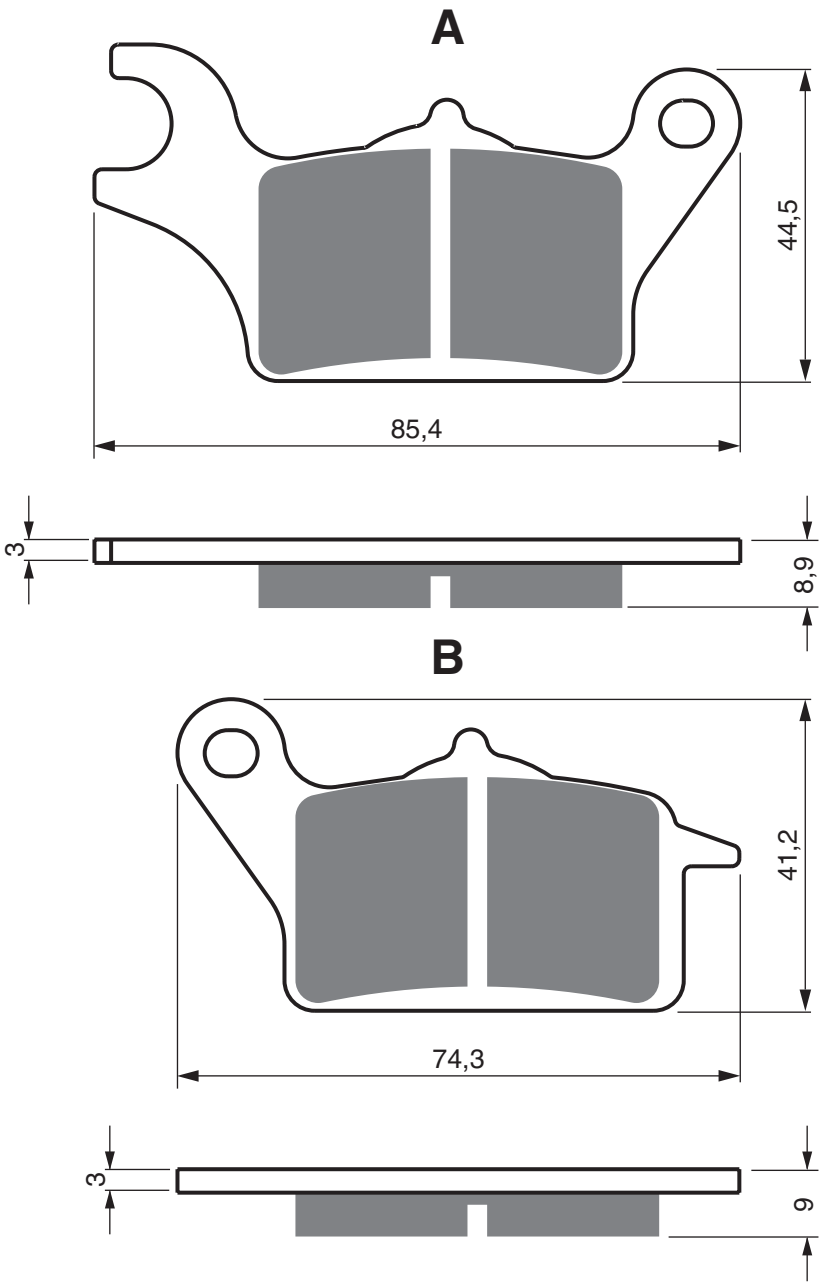

SUZUKI

UK	110	Address	2017 - 2021	FL

YAMAHA

MW	125	Tricity Scooter	2014 - 2016	FL
MWS	125	Tricity Scooter (3 Wheeler)	2017 - 2018	FL

EQUIVALENTS OEM

2CM F5805 00

AD | S3 | S33 RACING

PART NUMBER

359

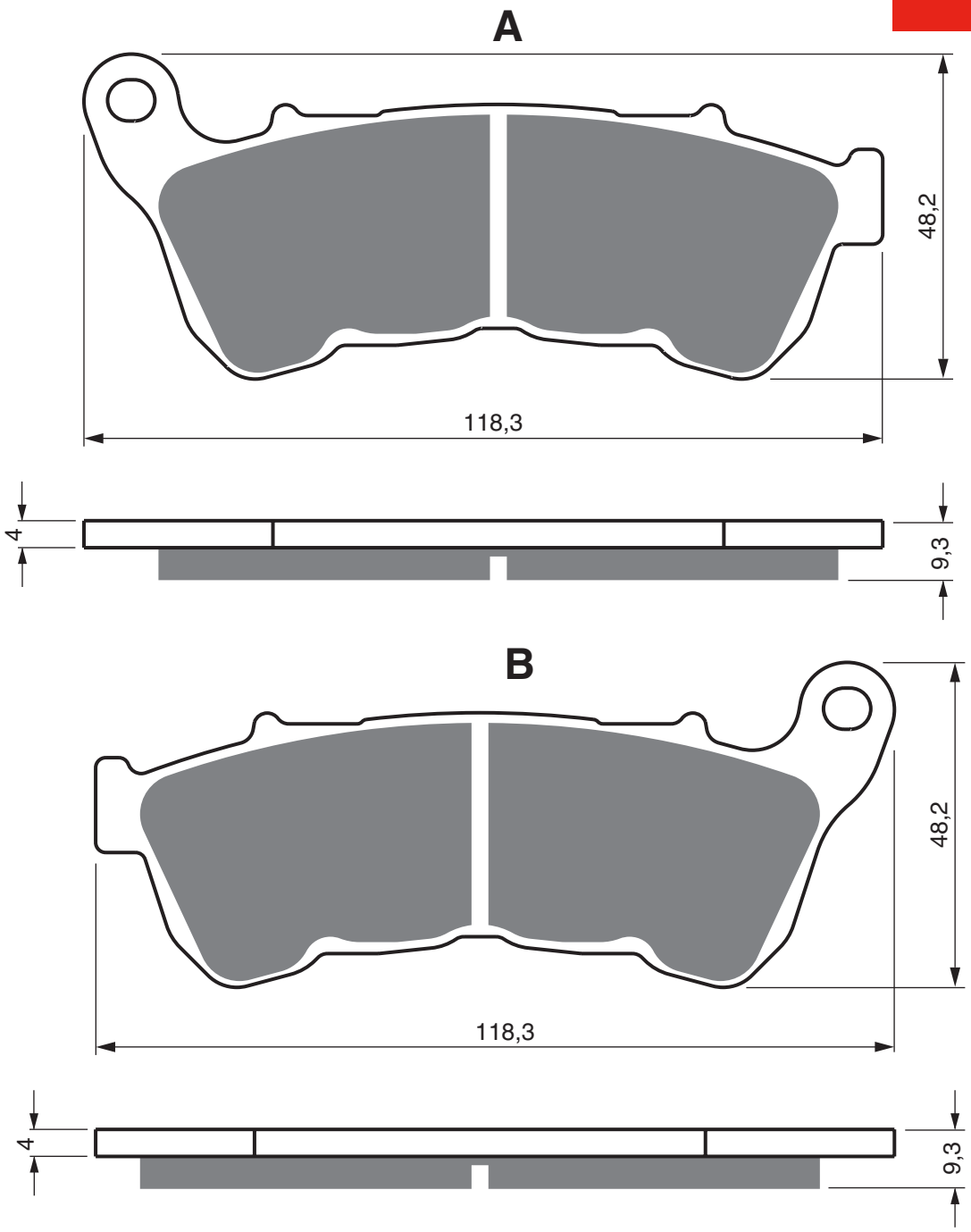

HARLEY DAVIDSON

XL	883	L Super Low (Cast Wheels)	2014 - 2020	FL	FR
XL	883	N Iron	2016 - 2020	FL	FR
XL	883	N Iron (Cast wheels)	2014 - 2015	FL	FR
XL	883	R Roadster (Cast wheels)	2014 - 2015	FL	FR
XL	1 200	C Custom (Spoke Wheels)	2014 - 2020	FL	FR
XL	1 200	C Custom Ltd (Spoke Wheel)	2014 - 2020	FL	FR
XL	1 200	CX Roadster	2016 - 2020	FL	FR
XL	1 200	Forty Eight Anniversary	2018 - 2018	FL	FR
XL	1 200	NS Iron	2018 - 2018	FL	FR
XL	1 200	T Superlow	2014 - 2020	FL	FR
XL	1 200	V Seventy-Two	2014 - 2016	FL	FR
XL	1 200	X Forty Eight	2014 - 2018	FL	FR
XL	1 200	XS Forty Eight Special	2018 - 2018	FL	FR

Equivalents OEM

41 300 004

PART NUMBER

360

AD	S3	S33 RACING

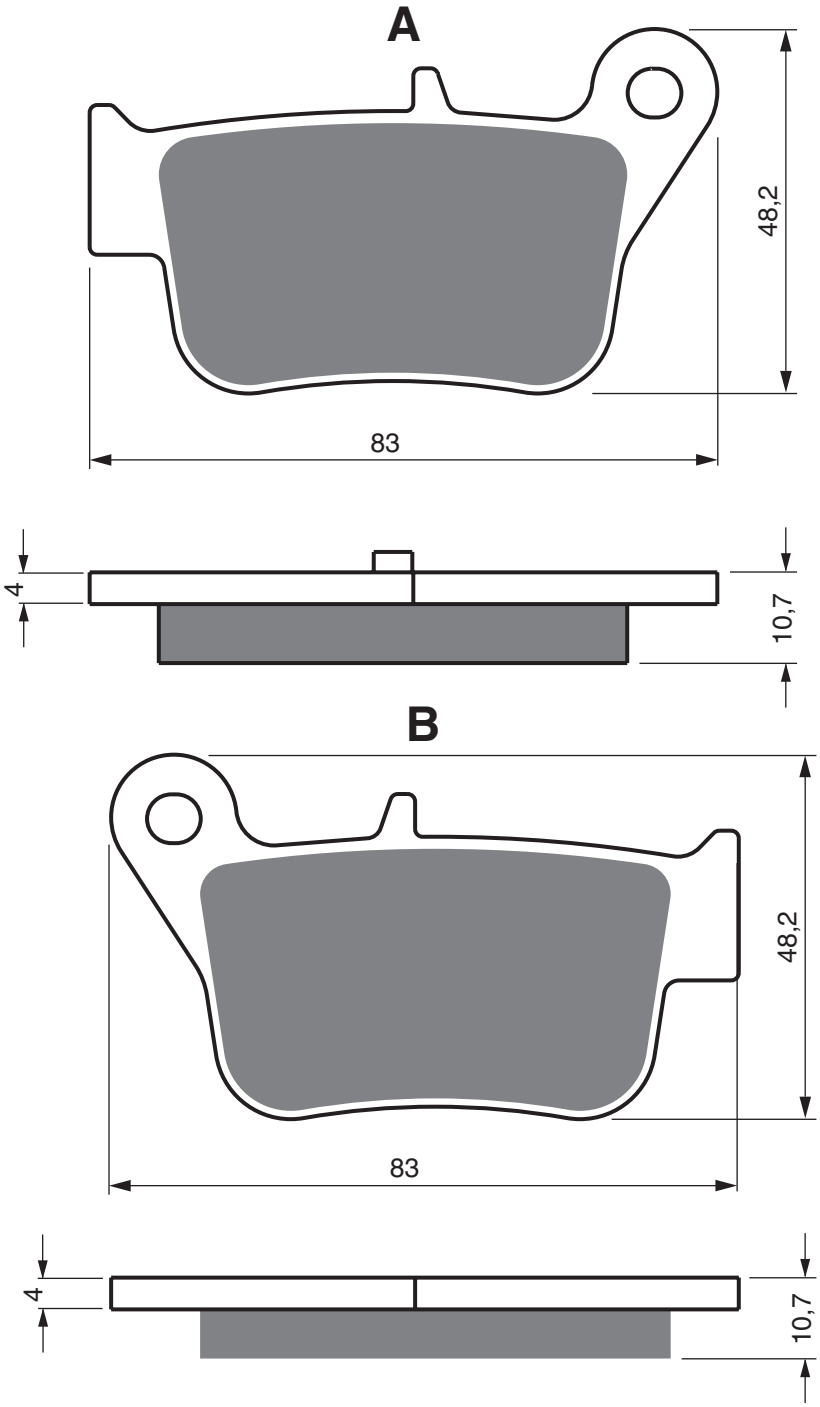

SYM

400	Max Sym 400i (Inc ABS)	2011 - 2020	RR
600	Max Sym 600i (ABS)	2014 - 2015	RR

EQUIVALENTS OEM

43140 L4A 300

AD | S3 | S33 RACING

PART NUMBER

361

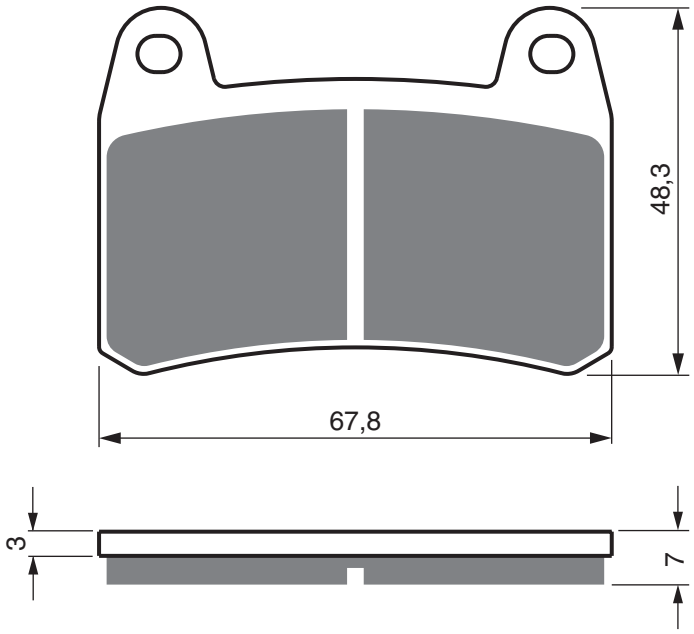

BENELLI

	125	Leoncino 125	2018 - 2020	FL
TRK	125		2018 - 2020	FL
TNT	200	Tornado Naked T (200cc)	2017 - 2018	FL
	250	Leoncino	2018 - 2020	FL
BN	251		2014 - 2018	FL
TRK	251		2018 - 2020	FL
TNT	300	Tornado Naked T 300cc	2016 - 2018	FL
	302	R	2017 - 2020	FL
	302	S	2018 - 2020	FL
BN	302		2015 - 2016	FL
BN	302		2017 - 2018	FL
BN	302		2017 - 2018	FR
	402	S	2018 - 2018	FL

CF MOTO

CF	150	-3 (150NK)	2015 - 2015	FL

GENERIC

	125	Code S (4T)	2012 - 2016	FL
	125	Code X (4T)	2012 - 2016	FL
	125	Worx (4T)	2012 - 2016	FL
GRS	125		2013 - 2016	FL
	150	Code S (4T)	2012 - 2016	FL
	150	Code X (4T)	2012 - 2016	FL
	150	Worx (4T)	2012 - 2016	FL
	200	Code S (4T)	2012 - 2016	FL
	200	Code X (4T)	2012 - 2016	FL

KEEWAY

RKV	125		2010 - 2014	FL
RKV	150		2013 - 2014	FL
RKX	150		2013 - 2014	FL
RKV	200	S	2014 - 2014	FL
RKV	200	S Factory	2014 - 2014	FL
RKX	200		2013 - 2014	FL

W.K.BIKES

NK	150		2015 - 2015	FL

EQUIVALENTS OEM

45120 J80 0000

PART NUMBER

362

AD	K1	K5	S3	S33 RACING

A

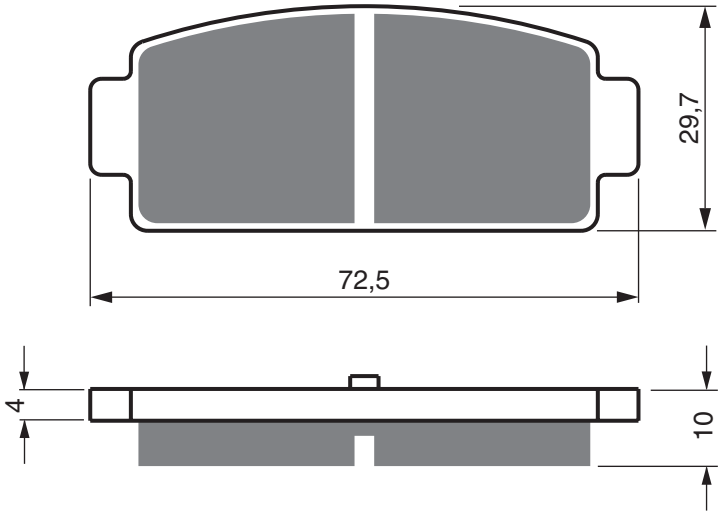

B

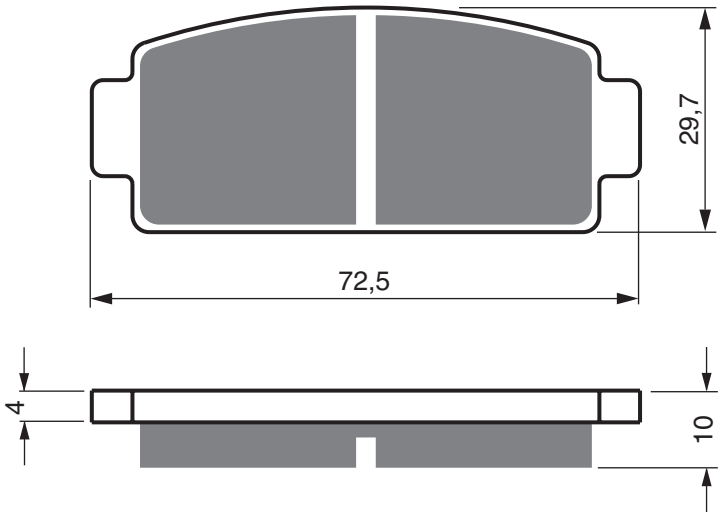

CF MOTO

CF	500	US - Z Force 550 (Side x Side)	2015 - 2015	RR	
CF	500	UU-A U-Force (Side x Side)	2015 - 2015	RL	RR
	600	C-Force	2020 - 2020	RL	RR
	600	C-Force EPS	2018 - 2019	RL	RR
CF	600	Z Force Z6 (Side x Side)	2013 - 2015	RL	RR
CF	600	Z Force Z6-EX (Side x Side)	2013 - 2015	RL	RR
CF	800	Z Force Z8 (Side x Side)	2013 - 2015	RL	RR
CF	800	Z Force Z8 - EX (Side x Side)	2014 - 2015	RL	RR
	950	Z-Force	2020 - 2020	RL	RR
	1 000	Z-Force	2020 - 2020	RL	RR

QUADZILLA

Z8	800	4x4 (Side x Side/800 cc)	2014 - 2015	RL	RR

EQUIVALENTS OEM

9060 081010

AD | S3 | S33 RACING

PART NUMBER

363

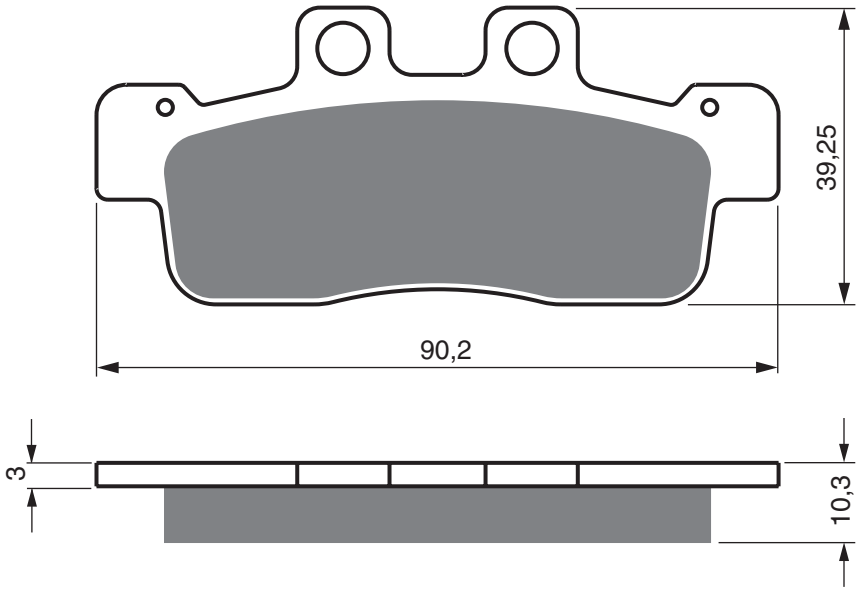

YAMAHA

NCX	125	K Cygnus X Cab (HC6-1)	2007 - 2010	FL
NCX	125	L Cygnus X Injection (4C6-2)	2007 - 2010	FL
YW	125	X (1DN1/2]	2010 - 2013	FL

EQUIVALENTS OEM

17C W0045 00	4C6 W0045 00

PART NUMBER

364

AD	K1	K5	S3	S33 RACING

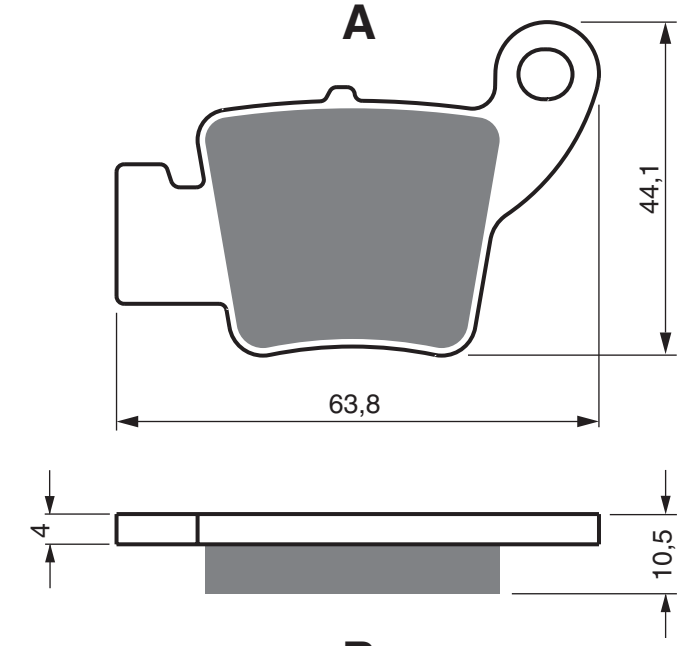

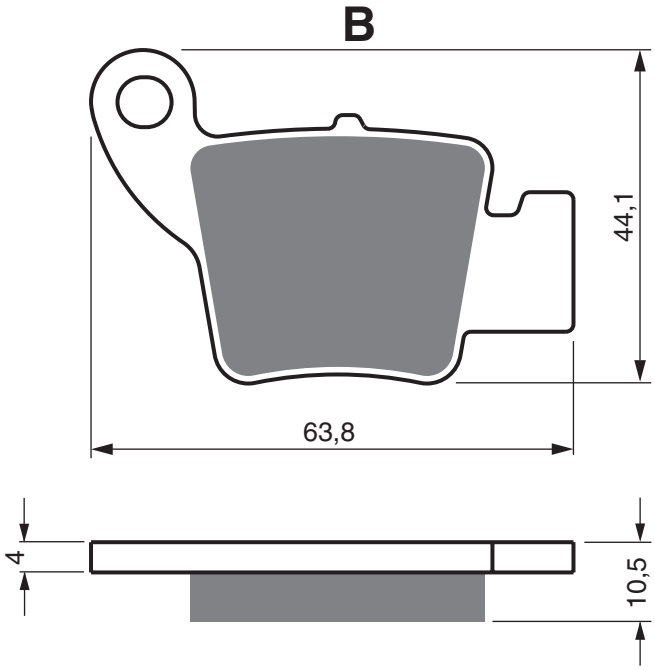

AJP

PR3	125	Enduro	2013 - 2015	RR
PR3	125	Enduro Pro	2013 - 2015	RR
PR3	125	Extreme	2013 - 2015	RR
PR3	125	Supermoto	2013 - 2015	RR
PR4	125	Enduro	2013 - 2015	RR
PR4	125	Enduro Pro	2013 - 2015	RR
PR4	125	Supermoto	2013 - 2015	RR
PR4	125	Trail	2013 - 2015	RR
PR3	200	Enduro	2012 - 2014	RR
PR3	200	Enduro Pro	2012 - 2014	RR
PR3	200	M/X Pro	2012 - 2014	RR
PR3	200	Supermoto	2012 - 2014	RR
PR4	200	Enduro	2012 - 2014	RR
PR4	200	Enduro Pro	2012 - 2014	RR
PR4	200	Extreme	2012 - 2014	RR
PR4	200	Supermoto	2012 - 2014	RR
PR3	240	MX Pro	2013 - 2015	RR
PR4	240	Extreme	2013 - 2015	RR
PR5	250	Enduro	2010 - 2015	RR
PR5	250	Extreme	2012 - 2015	RR
PR5	250	Supermoto	2010 - 2015	RR

EQUIVALENTS OEM

00TRA01A0058

AD | S3

PART NUMBER

365

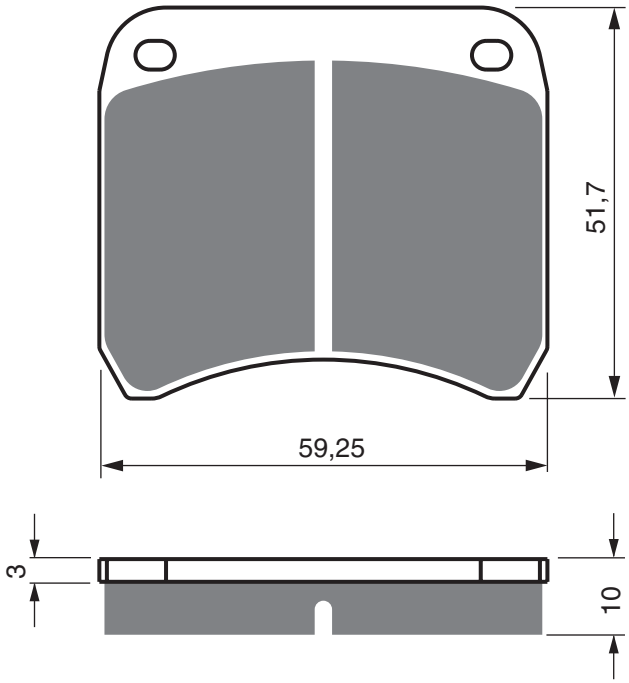

A.P.LOCKHEED

	2 Piston/2 Pin (CP2195/CP2696-38E0)		FL	
	22-033 (2 Piston HD)		FL	
	220-30 (2 Piston rear)		FL	

DUCATI

750	Sport (4 bolt disc fixing)	1974 - 1974	FL	

TRIUMPH

T140	D Bonneville (Lester Alloy Wheels)	1979 - 1981	FL	RR
T140	E Bonneville	1978 - 1983	FL	RR
T140	E/ES (750cc) (Executive/Alloy Wheels)	1981 - 1983	FL	RR
T140	ES (750cc) (Electric Start)	1980 - 1981	FL	RR
T140	Silver Jubilee Bonneville	1977 - 1977	FL	RR
T140	V Bonneville (5 Speed Gearbox/Drum rear brake)	1973 - 1974	FL	
T140	V Bonneville (Disc All Round/5 Speed Gearbox)	1975 - 1978	FL	RR
T150	V (Trident 3 cyl)	1973 - 1974	FL	RR
T160	V (Trident 3 cyl)	1975 - 1975	FL	RR
TSS 750	(8 valve)	1983 - 1983	FL	RR
TSX 750		1983 - 1983	FL	RR

EQUIVALENTS OEM

4 741 537	99-2769

PART NUMBER

366

AD	S3	S33 RACING	GP5	GP6	GP7	GPR

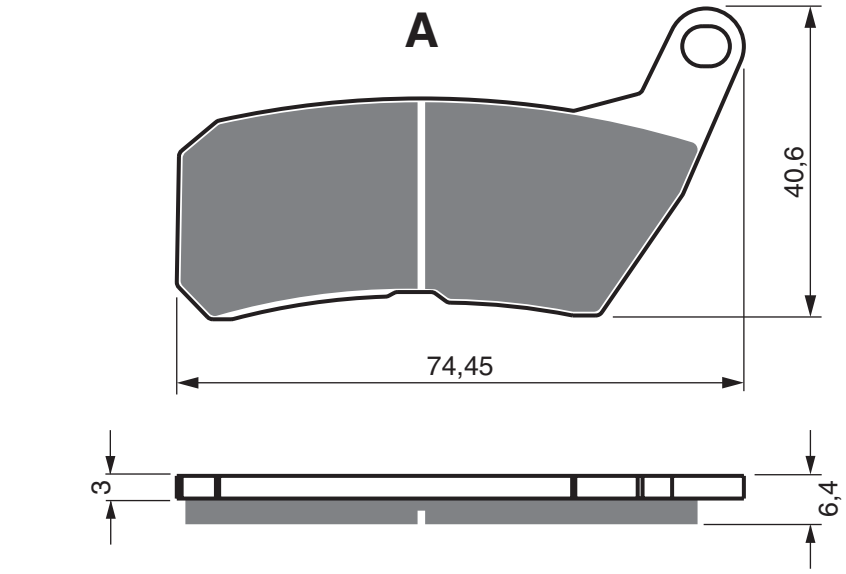

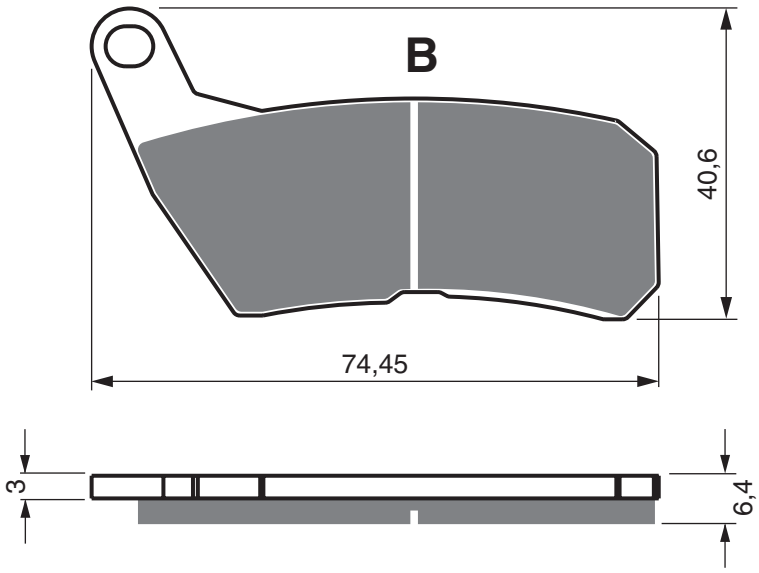

HM

CRE	50	Six Competition	2007 - 2012	FL
CRM	50	Derapage Competition	2009 - 2012	FL
CRE-F	125	X Six (4T)	2010 - 2011	FL
CRM	125	(Derapage Competition 2T)	2011 - 2012	FL
CRM F	125	X (Derapage Competition 4T)	2010 - 2011	FL

EQUIVALENTS OEM

K00979315

AD **S3**

1 set = 4 pcs

PART NUMBER

367

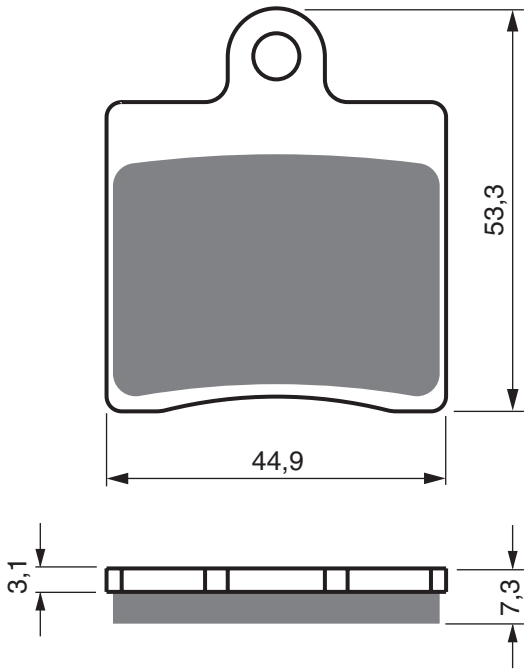

DAELIM

S1	125	(SL125)	2007 - 2014	FL
S3	125	(SV 125)	2010 - 2011	FL
S3	125	(SV125)	2012 - 2014	FL
SL	125	Otello Fi	2007 - 2009	FL
SN	125	B-Bone	2009 - 2014	FL
SQ	125	S2 Freewing	2007 - 2009	FL
S3	250	(SV 250)	2012 - 2014	FL

EQUIVALENTS OEM

45105 SZ1 0100

PART NUMBER

368

AD	S3	S33 RACING	GP5	GP6	GP7	GPR

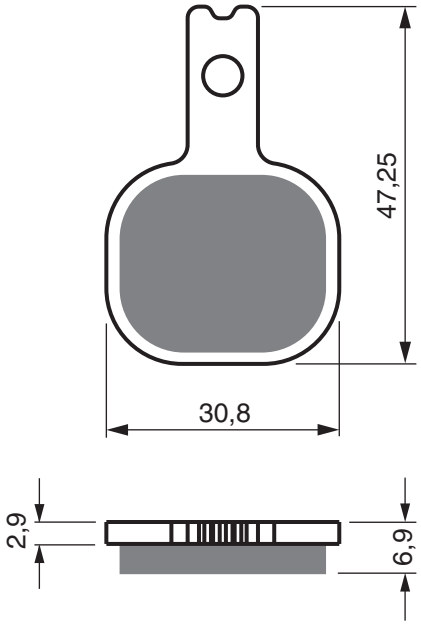

ISR

22-034 (6 Piston small)	FL
22-036 (2 Piston)	FL
22-043 (4 Piston)	FL
Radial 6 Piston Monoblock	FL

EQUIVALENTS OEM

ISR29-002

AD | S3 | S33 RACING

PART NUMBER

369

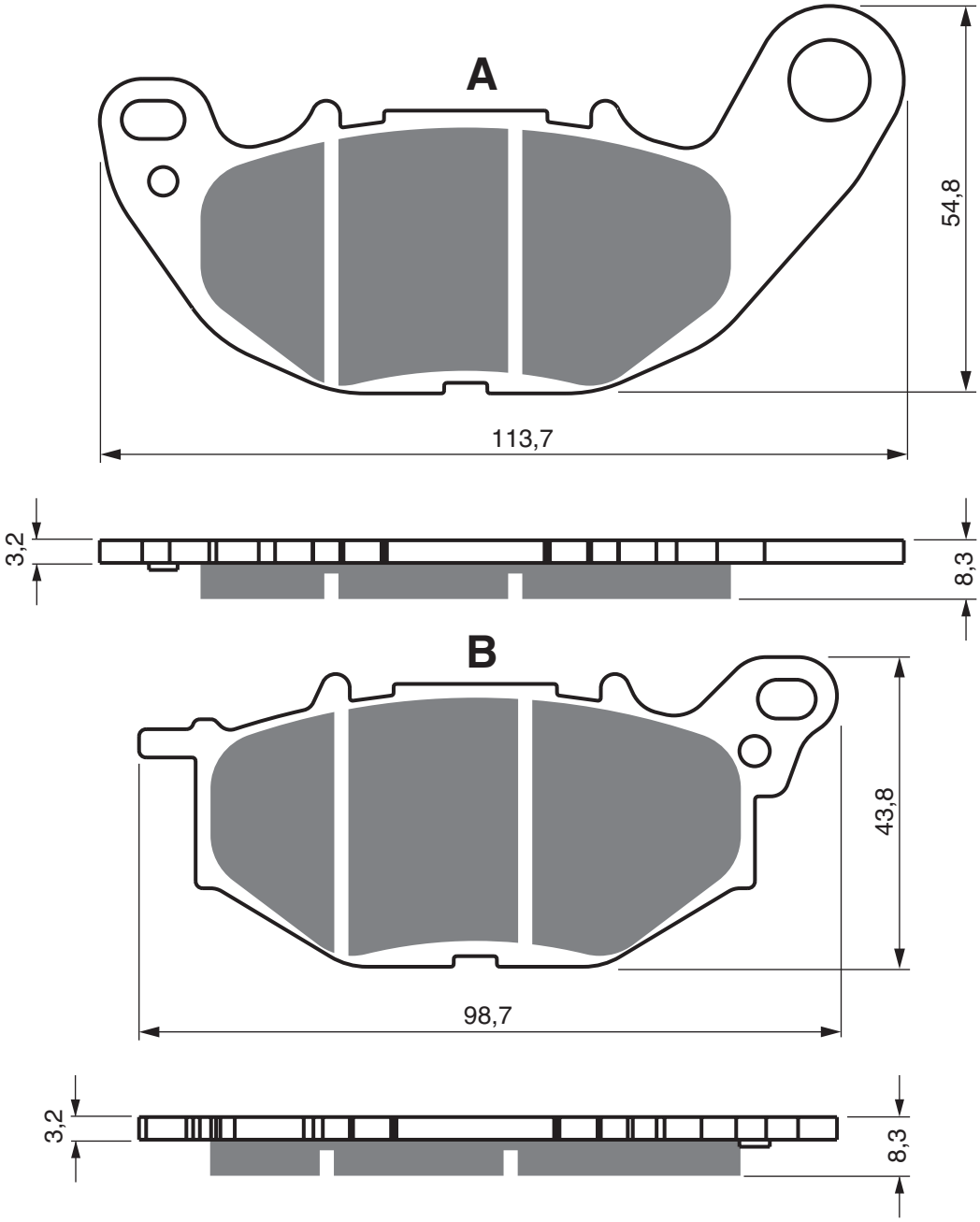

YAMAHA

YZF	300	R3 (321cc/ABS)	2015 - 2021	FL
MTN	320	A (MT-03 321cc)	2016 - 2021	FL

EQUIVALENTS OEM

1WD-25805-00

PART NUMBER

370

AD	S3	S33 RACING

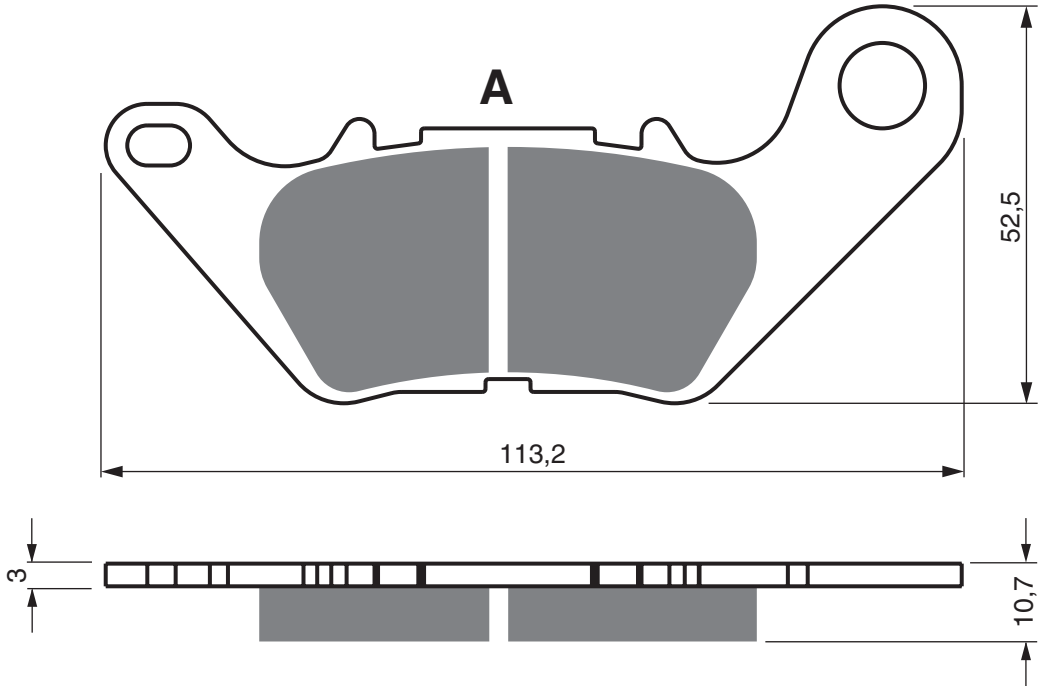

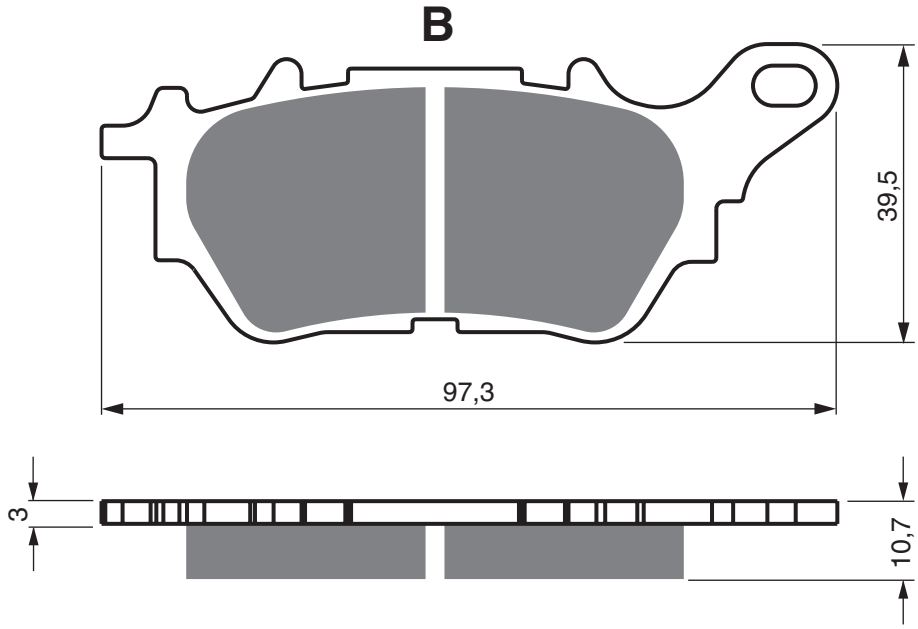

YAMAHA

YZF	300	R3 (321cc/ABS)	2015 - 2021	RR
MTN	320	A (MT-03 321cc)	2016 - 2021	RR

EQUIVALENTS OEM

1WD-25806-00

Disc Brake Pads

AD	K1	K5	S3	S33 RACING

PART NUMBER

373

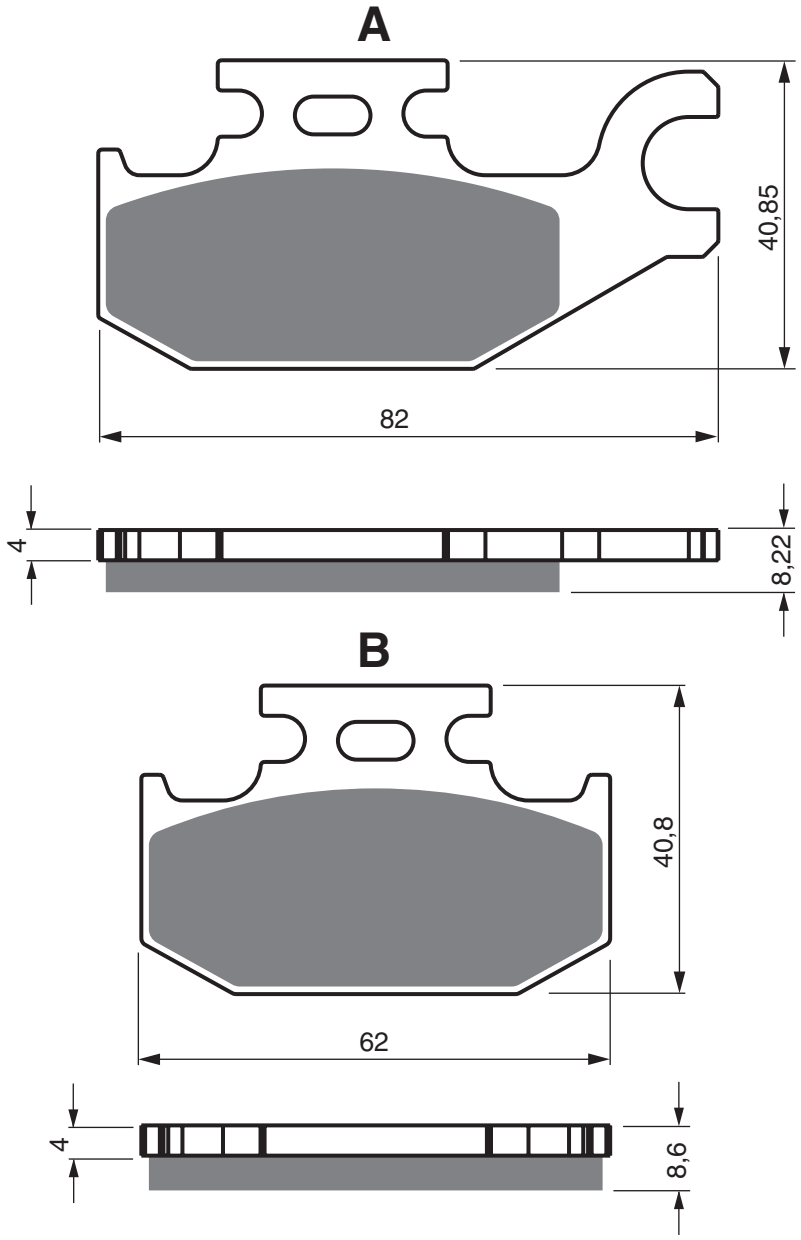

BENELLI

	250	Caffe Nero	2008 - 2014	RR

SUZUKI

UH	125	AL4/AL5/AL6/AL7/AL8 Burgman (ABS)	2014 - 2021	RR
UH	125	K7/K8/K9/L0/L1/L3 Burgman	2007 - 2013	RR
UH	125	L4/L5/L6 Burgman (Non ABS)	2014 - 2016	RR
UH	200	AL4/AL5/AL6/AL7/AL8/AL9 Burgman (ABS)	2014 - 2021	RR
UH	200	K7/K8/K9/L0/L1/L3 Burgman	2007 - 2013	RR
UH	200	L4/L5/L6 Burgman (Non ABS)	2014 - 2016	RR
LT-A	400	FK8/FK9/FL0/FL1 King Quad Auto 4WD	2008 - 2012	FL
LT-F	400	FK8/FK9/FL0/FL1 King Quad 4WD	2008 - 2012	FL
LT-A	450	XK7/XK8/XK9 King Quad	2007 - 2010	FL
LT-A	500	XPK9/XPZK9/XPL0-XPL5 King Quad (Power Steering)	2009 - 2015	FL
LT-A	700	XK5/XCK6/XK6/XK7 King Quad	2005 - 2007	FL
LT-A	750	XPK9/XPZK9/XPL0-XPL5 King Quad (Power Steering)	2009 - 2015	FL
LT-A	750	XZK8/XK8/XK9/XZK9/XL0 King Quad	2008 - 2010	FL

EQUIVALENTS OEM

59100 31860	69101 03820

PART NUMBER

374

AD	K1	K5	S3	S33 RACING

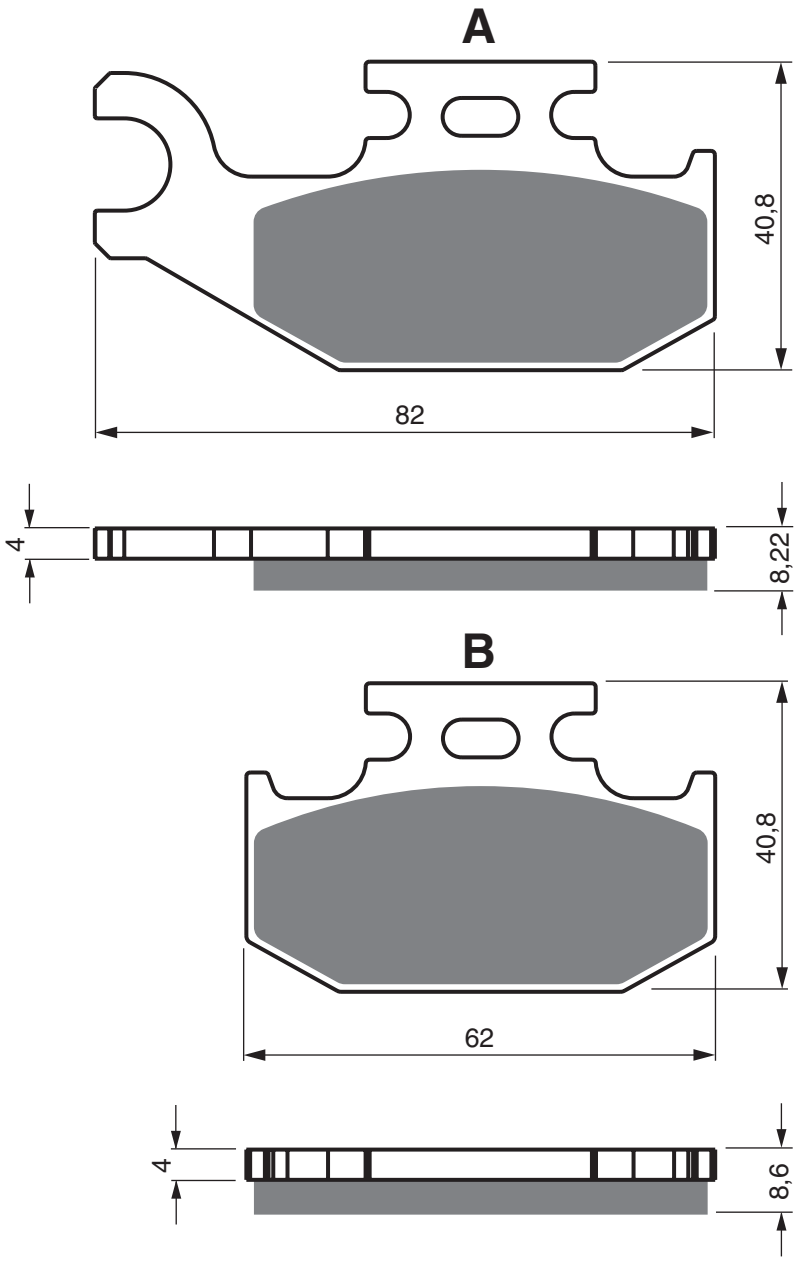

SUZUKI

LT-A	400	FK8/FK9/FL0/FL1 King Quad Auto 4WD	2008 - 2012	FR
LT-F	400	FK8/FK9/FL0/FL1 King Quad 4WD	2008 - 2012	FR
LT-A	450	XK7/XK8/XK9 King Quad	2007 - 2010	FR
LT-A	500	XPK9/XPZK9/XPL0-XPL5 King Quad (Power Steering)	2009 - 2015	FR
LT-A	700	XK5/XCK6/XK6/XK7 King Quad	2005 - 2007	FR
LT-A	750	XPK9/XPZK9/XPL0-XPL5 King Quad (Power Steering)	2009 - 2015	FR
LT-A	750	XZK8/XK8/XK9/XZK9/XL0 King Quad	2008 - 2010	FR

EQUIVALENTS OEM

59100 31850

AD	K1	K5	S3	S33 RACING

PART NUMBER

375

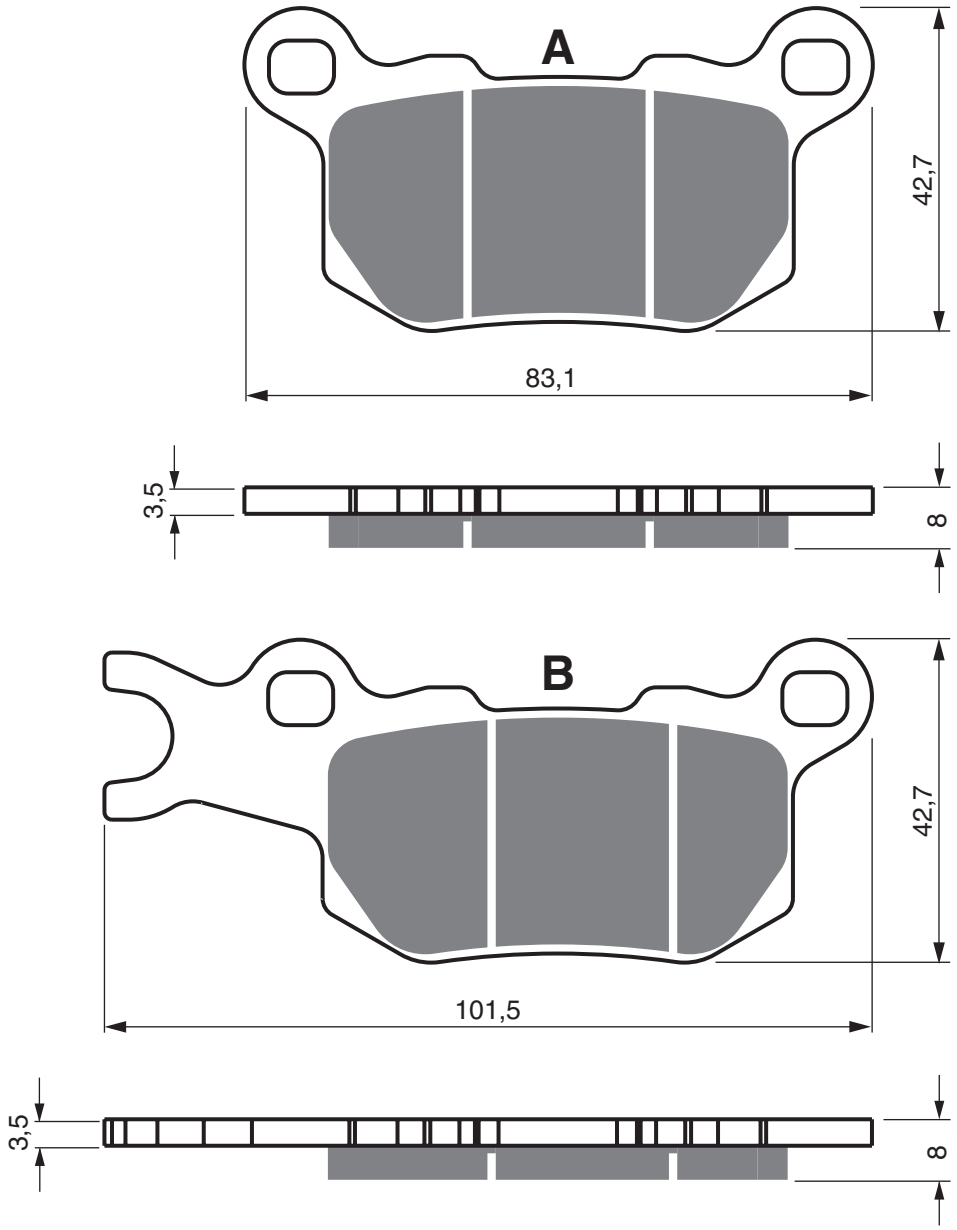

CAN-AM

799	Defender	2016 - 2016	RR
799	Defender DPS	2016 - 2016	RR
799	Defender HD8	2017 - 2019	RR
799	Defender Max HD8	2018 - 2019	RR
799	Defender XT	2016 - 2016	RR
799	Defender XT Cab	2016 - 2016	RR
976	Defender	2016 - 2016	RR
976	Defender DPS	2016 - 2016	RR
976	Defender HD10	2017 - 2019	RR
976	Defender Max HD10 inc XMR	2018 - 2019	RR
976	Defender XT	2016 - 2016	RR
976	Defender XT Cab	2016 - 2016	RR
	Maverick X3	2018 -	

EQUIVALENTS OEM

715 900 382

PART NUMBER

376

AD	K1	K5	S3	S33 RACING

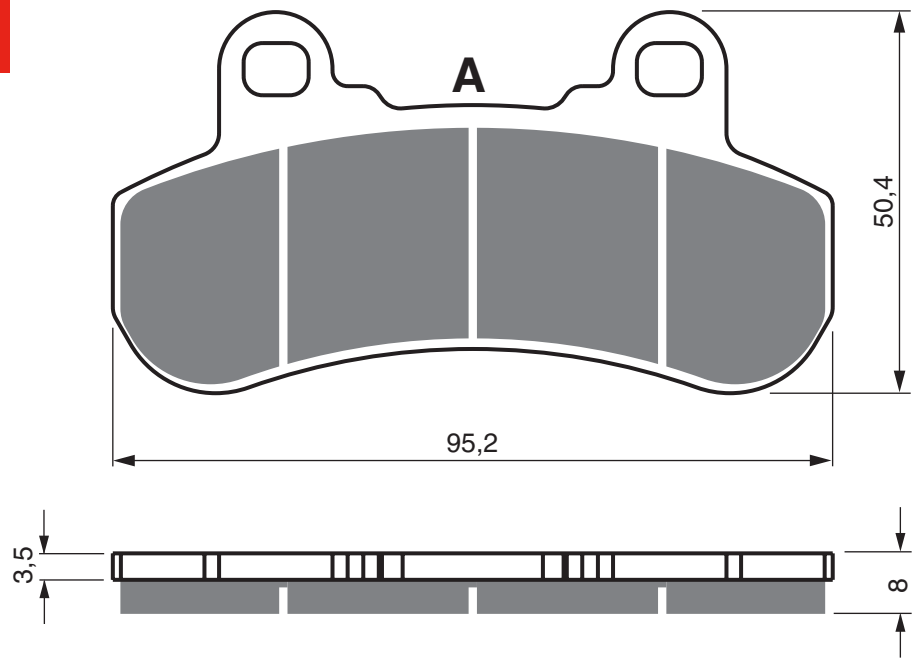

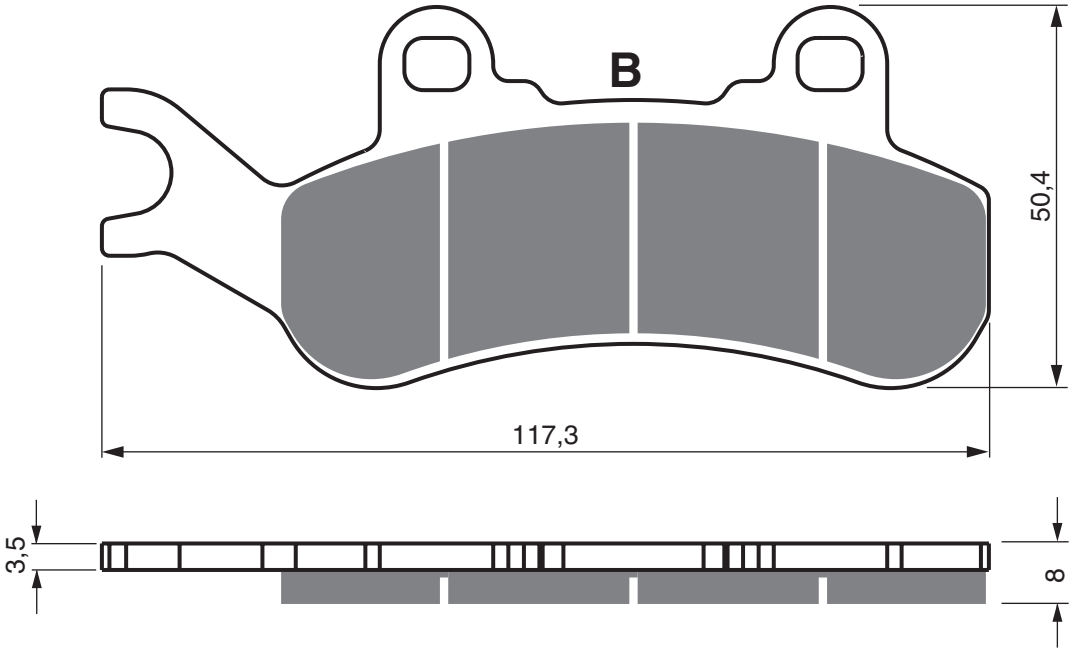

CAN-AM

500	Defender HD5	2017	2019	FR	RR
500	Traxter HD5	2017	2019	FR	RR
500	Traxter T HD5	2018	2019	FR	RR
799	Defender	2016	2016	FR	
799	Defender DPS	2016	2016	FR	
799	Defender HD8	2017	2019	FR	
799	Defender Max HD8	2018	2019	FR	
799	Defender XT	2016	2016	FR	
799	Defender XT Cab	2016	2016	FR	
800	Maverick Trail R EFI	2018	2018	FR	RR
800	Traxter HD8	2017	2019	FR	RR
800	Traxter T HD8	2018	2019	FR	RR
976	Defender	2016	2016	FR	
976	Defender DPS	2016	2016	FR	
976	Defender HD10	2017	2019	FR	
976	Defender XT	2016	2016	FR	
976	Defender XT Cab	2016	2016	FR	
1 000	Maverick X3 Turbo	2018	2018	FR	RR
1 000	Maverick X3 Turbo R	2018	2018	FR	RR
1 000	Maverick Trail EFI	2018	2018	FR	RR
1 000	Maverick X3	2017	2017	FR	RR
1 000	Maverick X3 Max Turbo	2017	2018	FR	RR
1 000	Maverick X3 Max Turbo R	2018	2018	FR	RR
1 000	Traxter HD10	2017	2019	FR	RR
1 000	Traxter Max HD10	2018	2019	FR	RR
1 000	Traxter T HD10	2018	2019	FR	RR
	Maverick X3	2018	-		

EQUIVALENTS OEM

715 900 380	715 900 387

Disc Brake Pads

AD	K1	K5	S3	S33 RACING

PART NUMBER

377

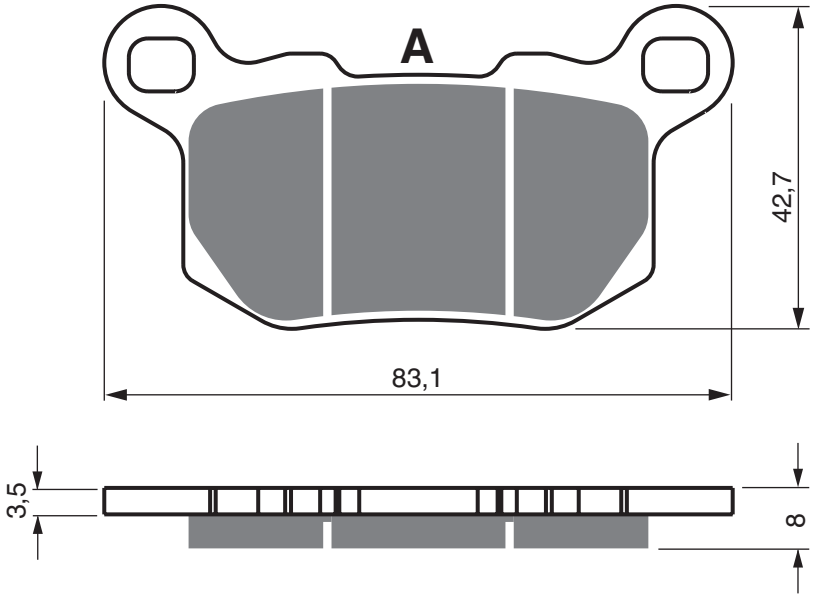

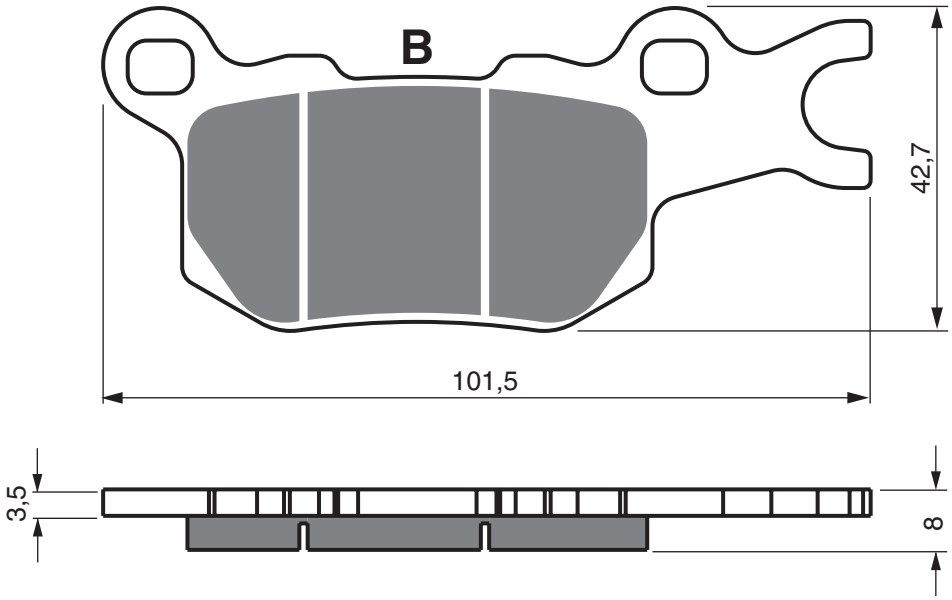

CAN-AM

799	Defender	2016 - 2016	RL
799	Defender DPS	2016 - 2016	RL
799	Defender HD8	2017 - 2019	RL
799	Defender Max HD8	2018 - 2019	RL
799	Defender XT	2016 - 2016	RL
799	Defender XT Cab	2016 - 2016	RL

976	Defender	2016 - 2016	RL
976	Defender DPS	2016 - 2016	RL
976	Defender HD10	2017 - 2019	RL
976	Defender Max HD10 inc XMR	2018 - 2019	RL
976	Defender XT	2016 - 2016	RL
976	Defender XT Cab	2016 - 2016	RL
	Maverick X3	2018 -	

EQUIVALENTS OEM

715 900 381

PART NUMBER

378

AD	K1	K5	S3	S33 RACING

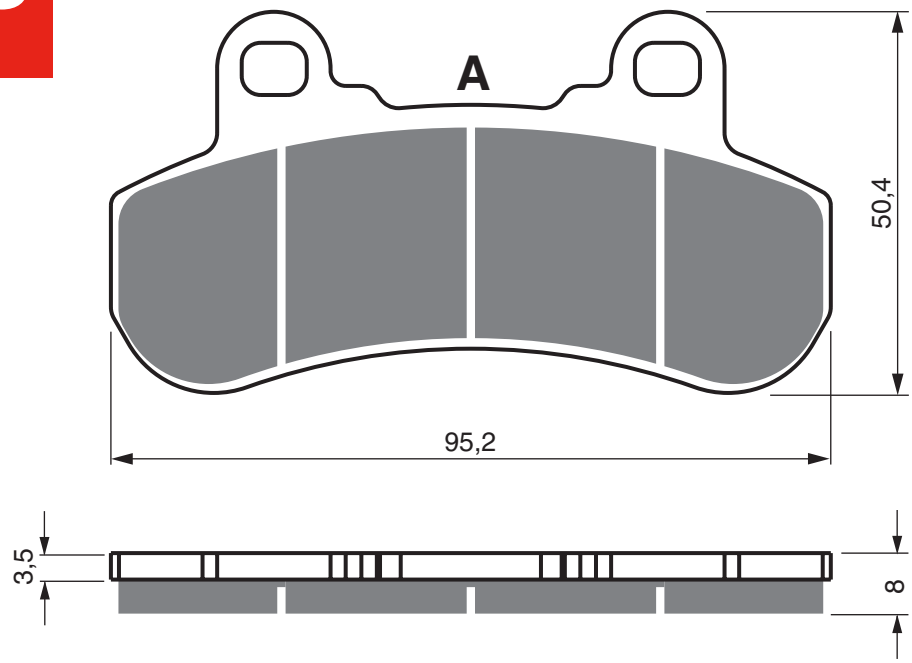

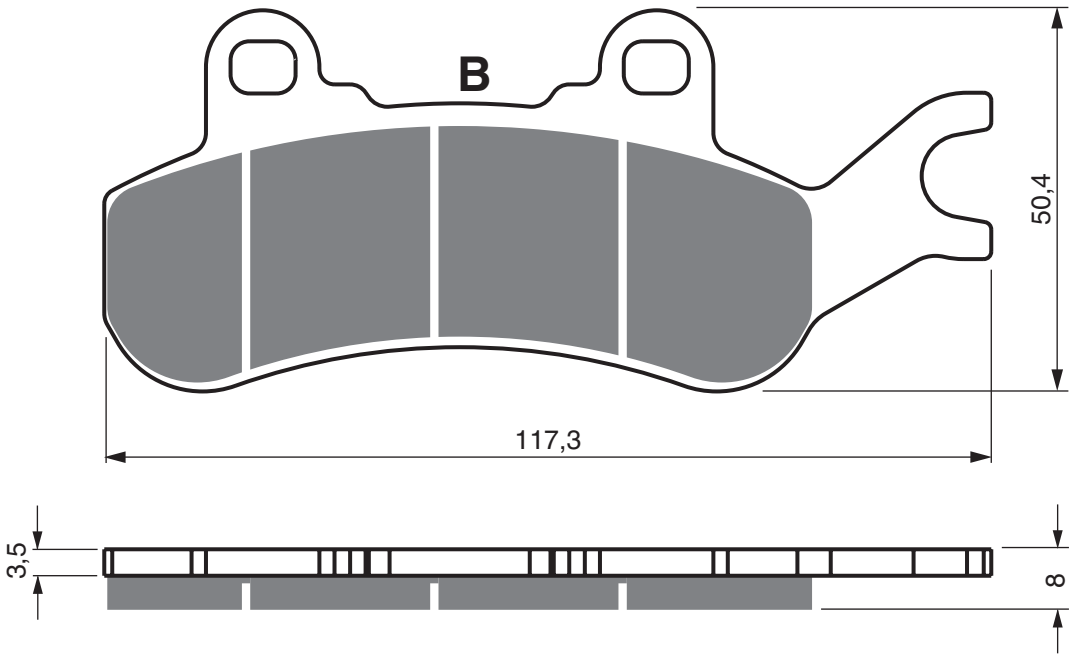

CAN-AM

500	Defender HD5	2017 - 2019	FL	
500	Traxter HD5	2017 - 2019	FL	
500	Traxter T HD5	2018 - 2019	FL	
799	Defender	2016 - 2016	FL	
799	Defender DPS	2016 - 2016	FL	
799	Defender HD8	2017 - 2019	FL	
799	Defender Max HD8	2018 - 2019	FL	
799	Defender XT	2016 - 2016	FL	
799	Defender XT Cab	2016 - 2016	FL	
800	Maverick Trail R EFI	2018 - 2018	FL	RL
800	Traxter HD8	2017 - 2019	FL	
800	Traxter T HD8	2018 - 2019	FL	
976	Defender	2016 - 2016	FL	
976	Defender DPS	2016 - 2016	FL	
976	Defender HD10	2017 - 2019	FL	
976	Defender Max HD10 inc XMR	2018 - 2019	FL	
976	Defender XT	2016 - 2016	FL	
976	Defender XT Cab	2016 - 2016	FL	
1 000	Maverick X3 Turbo	2018 - 2018	FL	RL
1 000	Maverick X3 Turbo R	2018 - 2018	FL	RL
1 000	Maverick Trail EFI	2018 - 2018	FL	RL
1 000	Maverick X3	2017 - 2017	FL	RL
1 000	Maverick X3 Max Turbo	2017 - 2018	FL	RL
1 000	Maverick X3 Max Turbo R	2018 - 2018	FL	RL
1 000	Traxter HD10	2017 - 2019	FL	
1 000	Traxter Max HD10	2018 - 2019	FL	
1 000	Traxter T HD10	2018 - 2019	FL	
	Maverick X3	2018 -		

EQUIVALENTS OEM

715 900 379	715 900 386

Disc Brake Pads

AD	K5	S3	S33 RACING

PART NUMBER

379

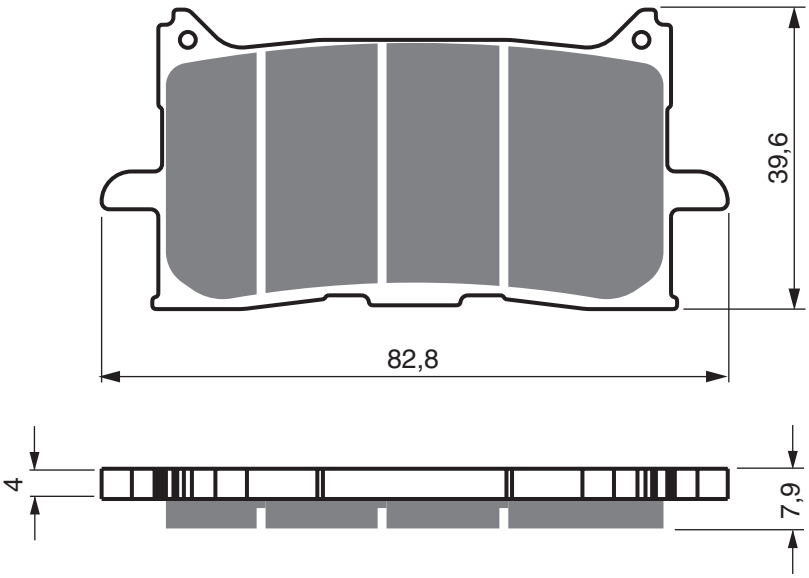

HONDA

CB	125	R	2018 - 2021	FL	
CB	300	R AC	2018 - 2021	FL	
CB	650	R AC	2019 - 2020	FL	FR
CB	650	RA AC	2019 - 2021	FL	FR
CBR	650	R 2AC	2018 - 2020	FL	FR
CBR	650	RA 2AC	2018 - 2021	FL	FR
ADV	750	H (X-ADV DCT)	2017 - 2018	FL	FR
CRF	1 000	Africa Twin ABS	2016 - 2017	FL	FR
CRF	1 000	Africa Twin ABS DCT	2016 - 2020	FL	FR
CRF	1 100	Africa Twin Adventure Sport ES ABS (DCT)	2018 - 2021	FL	FR
CRF	1 100	Africra Twin Adventure Sport ES ABS (Manual)	2018 - 2021	FL	FR

EQUIVALENTS OEM

06455-MJP-652	06455 MKH D01

PART NUMBER

380

AD | S3 | S33 RACING

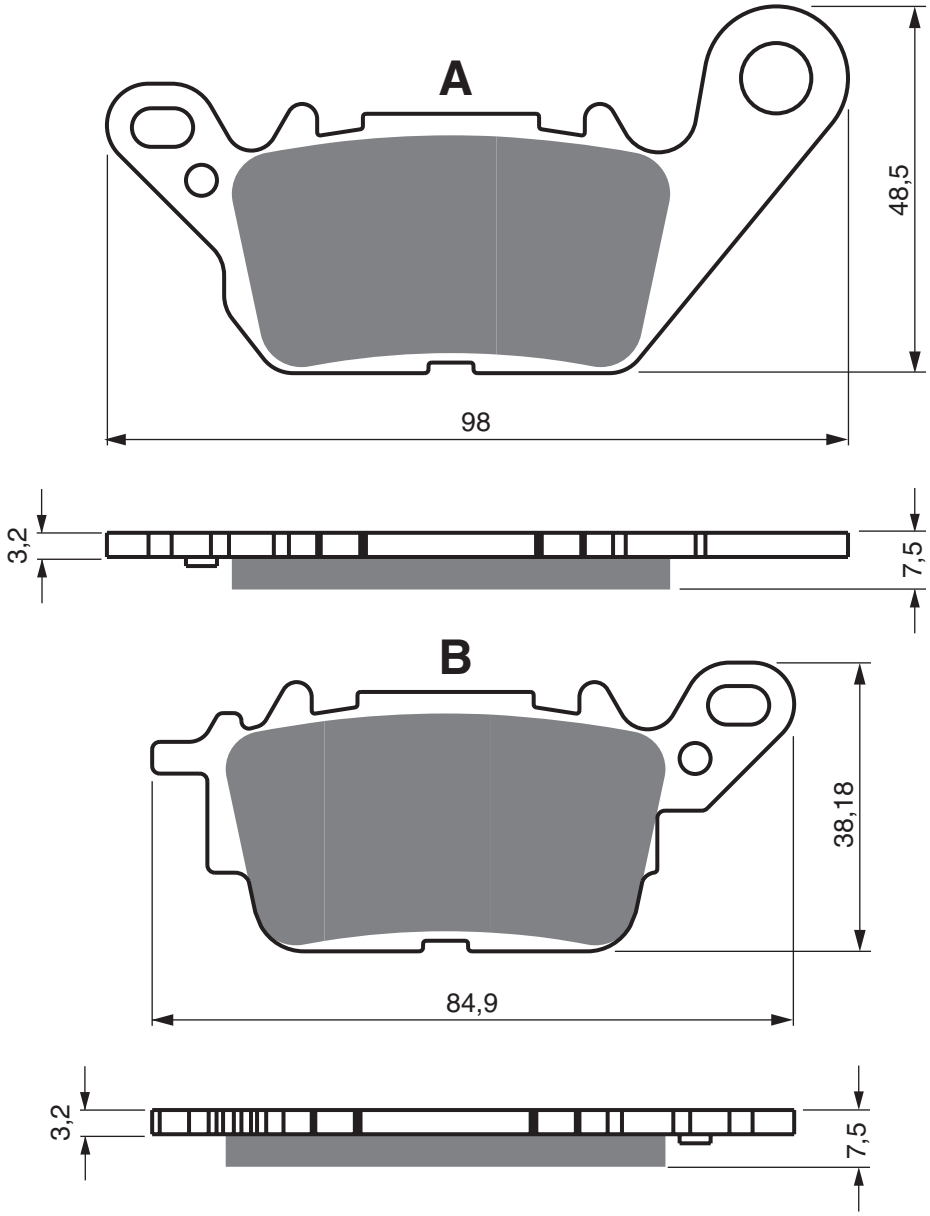

YAMAHA

GPD	125	A-N-MAX / 2DS1	2015 - 2018	FL
LTS	125	C-D'elight	2017 - 2021	FL
N-Max	125	See GPD 125 A	2015 - 2021	FL
GPD	150	A-N-MAX / 2DP4	2015 - 2018	FL
N-Max	150	See GPD 150 A	2015 - 2017	FL

EQUIVALENTS OEM

2DP-F5805-00

AD	K1	K5	S3	S33 RACING

PART NUMBER

381

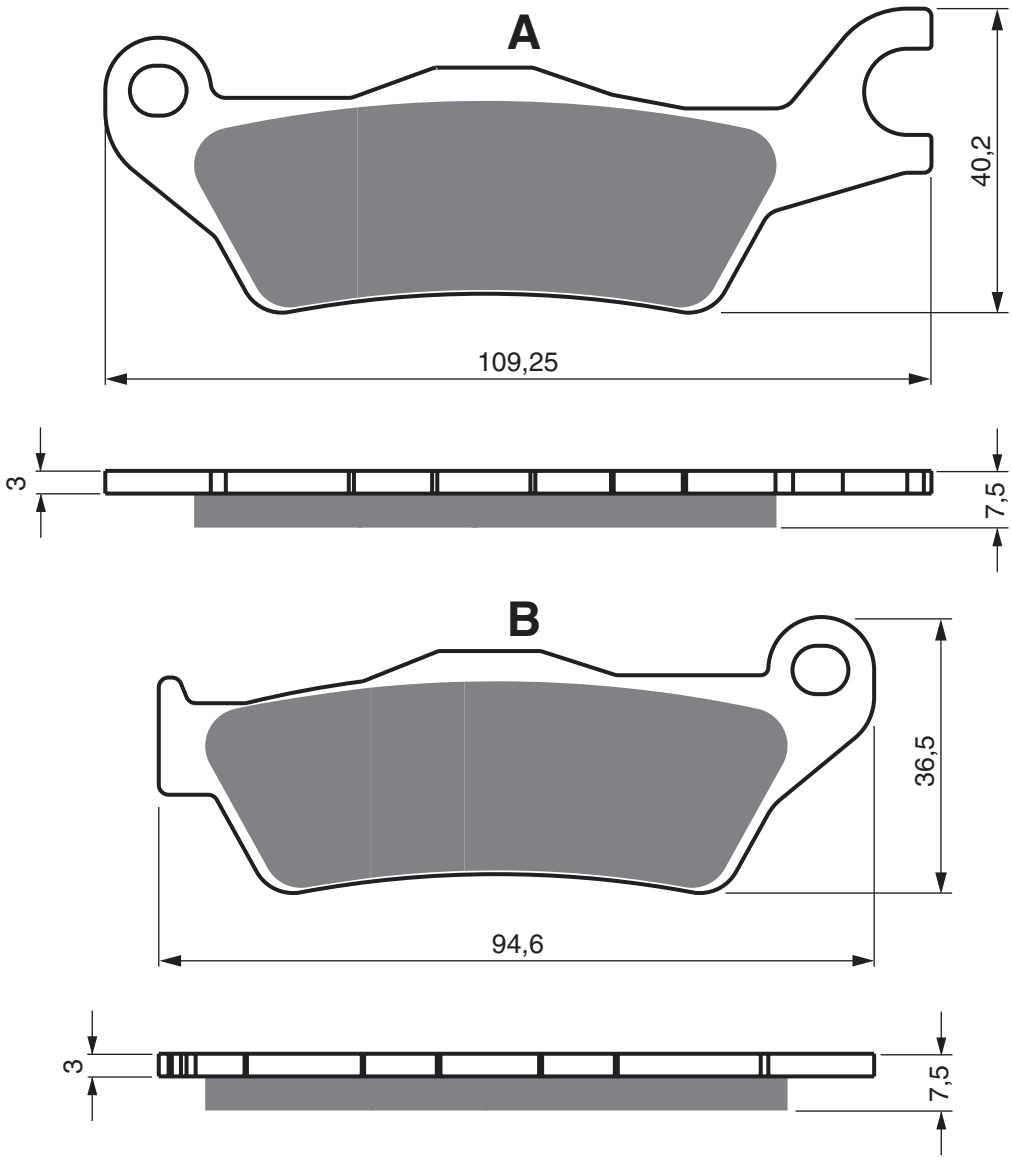

HONDA

CBF	125	6 Stunner	2006 - 2006	FL
CBF	125	M7 Stunner	2007 - 2007	FL
CBF	150	5	2005 - 2005	FL
CBF	150	6 (Spoke Wheels)	2006 - 2006	FL
CBF	150	M5 Unicorn	2005 - 2005	FL
CBF	150	M6/M7 Unicorn (Spoke Wheels)	2006 - 2007	FL
CBF	150	M7/M9/MA Unicorn (Cast Wheels)	2007 - 2010	FL
CBF	150	MB/MC Unicorn (Cast Wheels)	2011 - 2012	FL

SUZUKI

GSX-R	125	RLXL8/RLL8	2018 - 2021	FL
GSX-S	125	MLXL8/MLL8	2018 - 2021	FL
GSX	150	Gixxer (DZAL6/DEAL8/DZAL8/DXAL8)	2016 - 2020	FL
GSX	150	Gixxer L6	2016 - 2020	FL
GSX-R	150	FRFAL7/FRZAL7	2017 - 2020	FL
GSX-R	150	RF-Q/RFX-Q	2017 - 2020	FL
GSX-R	150	RFL8/RFXL8/RFXL9	2018 - 2020	FL
GSX-S	150	MFL8/MFXL8/MFXL9	2018 - 2020	FL

EQUIVALENTS OEM

59100-34880-000	06455 KCC 841	06455 KCC 842

PART NUMBER

382

AD	K1	K5	S3	S33 RACING

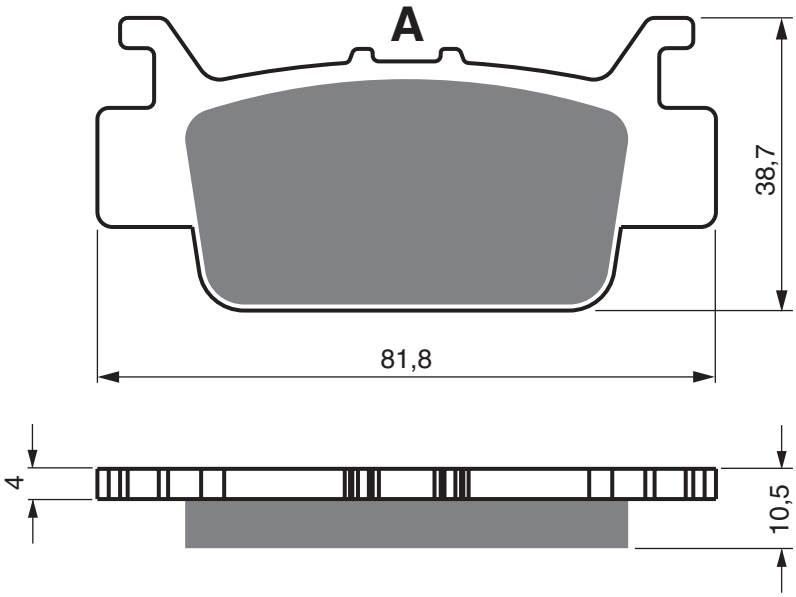

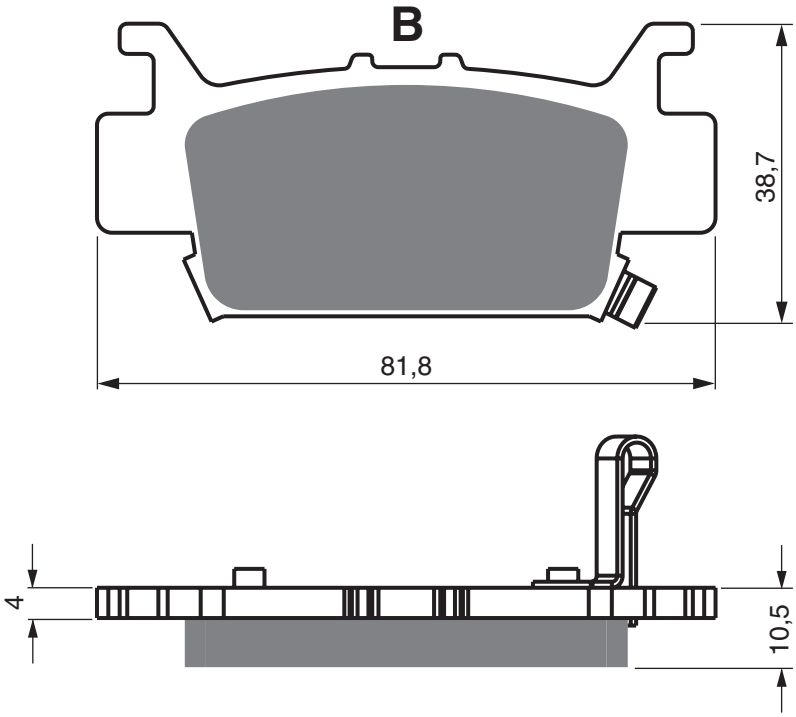

HONDA

SXS	1 000	M3 Pioneer (3 Seater)	2016 - 2020	RL
SXS	1 000	M3P Pioneer (3 Seater)	2016 - 2020	RL
SXS	1 000	M5D Pioneer (5 Seater)	2016 - 2020	RL
SXS	1 000	M5L Pioneer (5 Seater)	2017 - 2020	RL
SXS	1 000	M5P Pioneer (5 Seater)	2016 - 2020	RL
SXS	1 000	S2R Talon (2 Seater)	2019 - 2021	RL

EQUIVALENTS OEM

06431-HL4-A01

AD	K1	K5	S3	S33 RACING

PART NUMBER

383

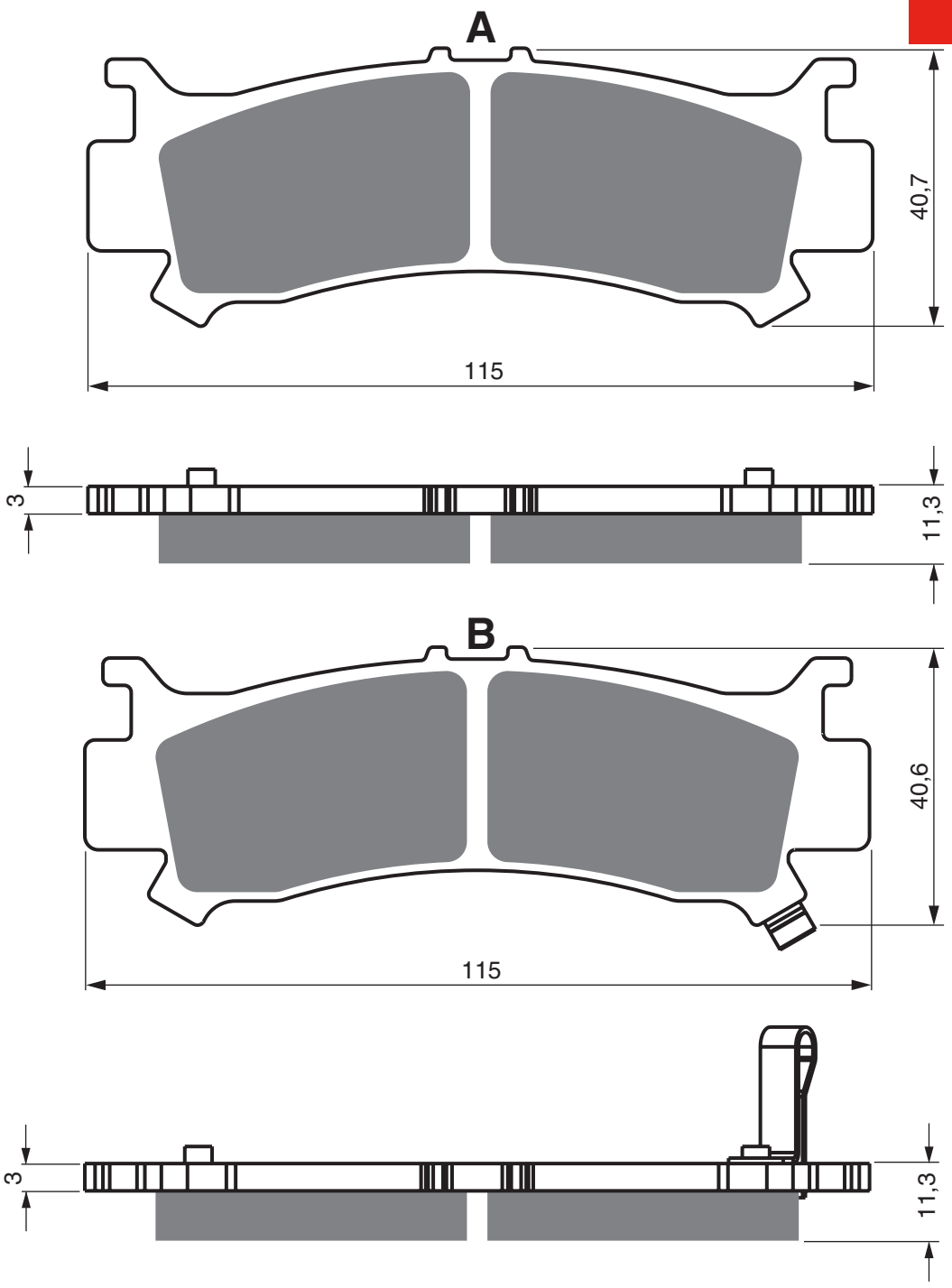

HONDA

SXS	1 000	M3 Pioneer (3 Seater)	2016 - 2020	FL
SXS	1 000	M3P Pioneer (3 Seater)	2016 - 2020	FL
SXS	1 000	M5D Pioneer (5 Seater)	2016 - 2020	FL
SXS	1 000	M5L Pioneer (5 Seater)	2017 - 2020	FL
SXS	1 000	M5P Pioneer (5 Seater)	2016 - 2020	FL
SXS	1 000	S2R Talon (2 Seater)	2019 - 2021	FL

EQUIVALENTS OEM

06451-HL4-A01

PART NUMBER

384

AD	K1	K5	S3	S33 RACING

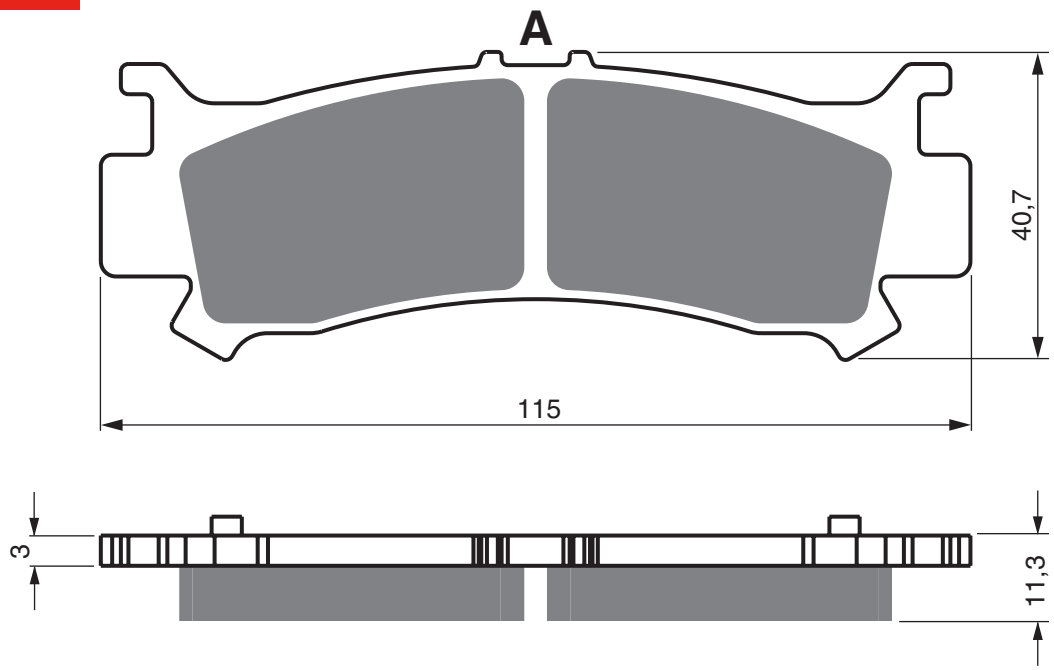

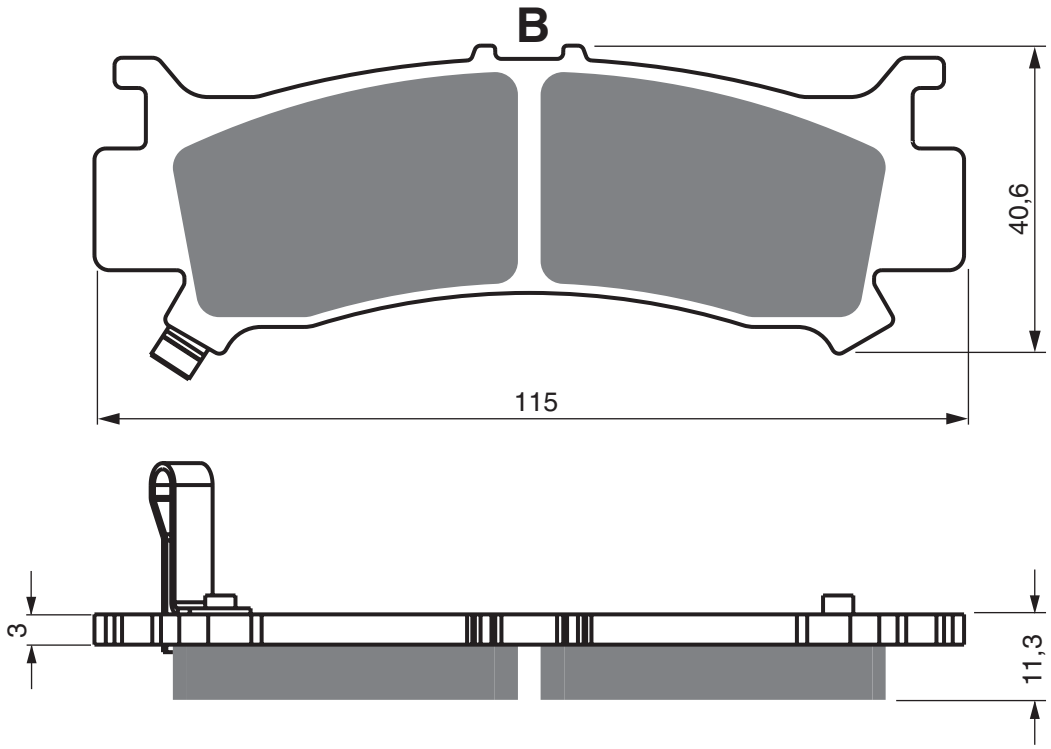

HONDA

SXS	1 000	M3 Pioneer (3 Seater)	2016 - 2020	FR
SXS	1 000	M3P Pioneer (3 Seater)	2016 - 2020	FR
SXS	1 000	M5D Pioneer (5 Seater)	2016 - 2020	FR
SXS	1 000	M5L Pioneer (5 Seater)	2017 - 2020	FR
SXS	1 000	M5P Pioneer (5 Seater)	2016 - 2020	FR
SXS	1 000	S2R Talon (2 Seater)	2019 - 2021	FR

EQUIVALENTS OEM

06452-HL4-A01

AD	K1	K5	S3	S33 RACING

PART NUMBER

385

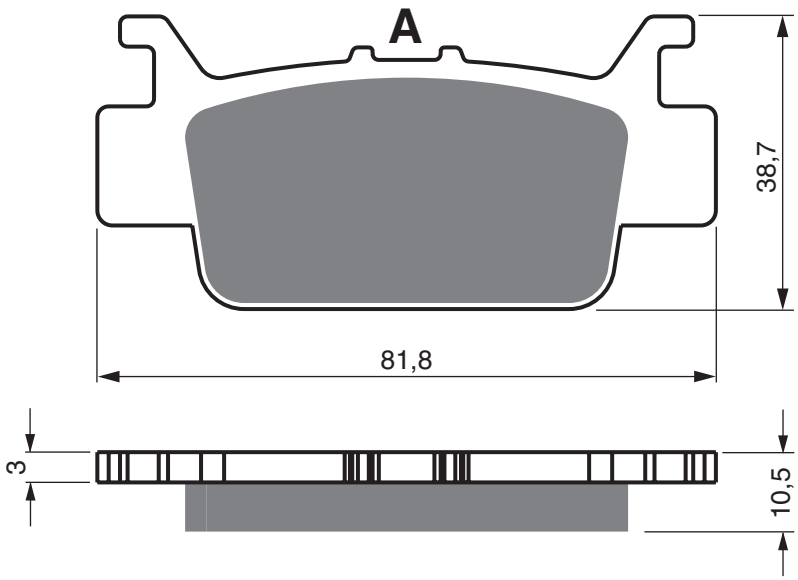

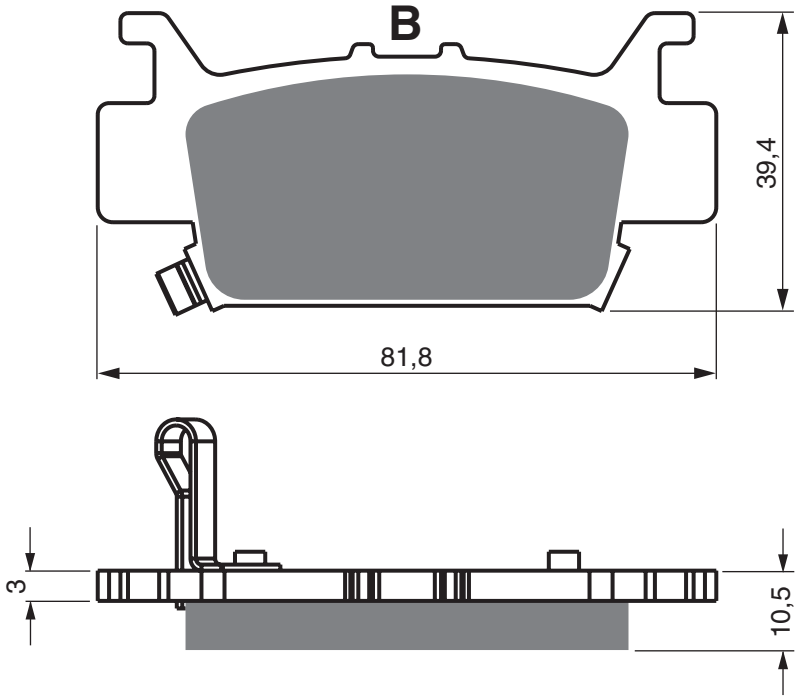

HONDA

SXS	1 000	M3 Pioneer (3 Seater)	2016 - 2020	RR
SXS	1 000	M3P Pioneer (3 Seater)	2016 - 2020	RR
SXS	1 000	M5D Pioneer (5 Seater)	2016 - 2020	RR
SXS	1 000	M5L Pioneer (5 Seater)	2017 - 2020	RR
SXS	1 000	M5P Pioneer (5 Seater)	2016 - 2020	RR
SXS	1 000	S2R Talon (2 Seater)	2019 - 2021	RR

EQUIVALENTS OEM

06432-HL4-A01

PART NUMBER

386

AD | S3 | S33 RACING

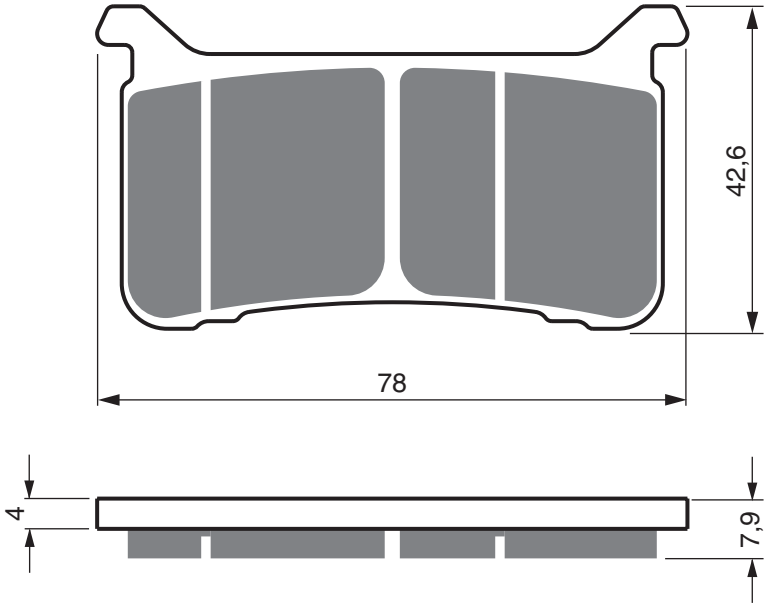

HONDA

CBR	600	RR	2017 - 2020	FL	FR
CBR	600	RR ABS	2017 - 2021	FL	FR
VFR	800	XH/XJ (Crossrunner/ABS)	2017 - 2018	FL	FR
CB	1 000	R (ABS Model)	2017 - 2020	FL	FR
CBR	1 000	RAH/RAJ Fireblade (C-ABS / Tokico Front Caliper)	2017 - 2020	FL	FR
CBR	1 000	RRH/RRJ Fireblade (C-ABS/Tokico Front Caliper)	2017 - 2020	FL	FR
PVT	1 000	RS Pursuer	2017 - 2018	FL	FR
CB	1 100	RS	2018 - 2018	FL	FR

EQUIVALENTS OEM

06455-MJM-D41	06455-MKF-D41

AD | S3 | S33 RACING

PART NUMBER

387

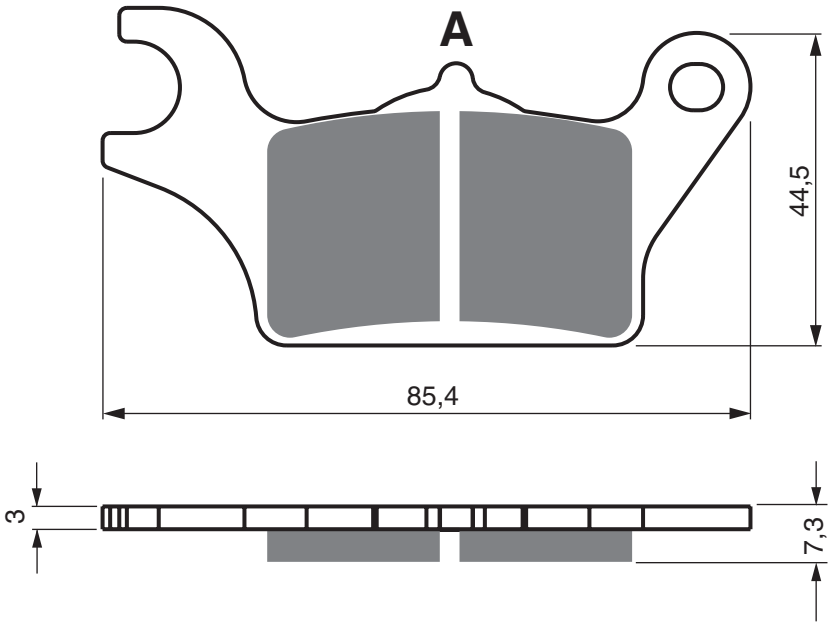

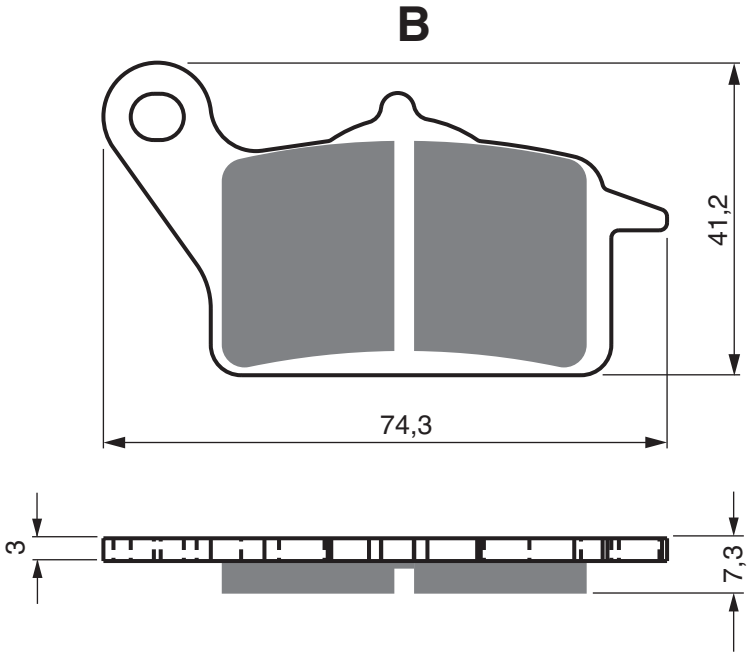

HONDA

NCX	50	50 E/G/J - Dunk 50	2014 - 2017	FL
ACB	110	CBB/CSB - Vario 110	2010 - 2010	FL
ACC	110	SCB/SCC - ANC 110 Icon	2011 - 2012	FL
ACD	110	CSB/SCB - Scoopy 110 Fi	2011 - 2016	FL
NSC	110	CBFF/CBFH - Dio 110	2015 - 2017	FL
NSC	110	CSD/CSE - Spacy 110	2012 - 2014	FL
NSC	110	MPDH Vision (16" Wheels)	2017 - 2018	FL
ACA	125	CBFE - Air Blade 125	2014 - 2016	FL

LIFAN

Lifan Electric LF 1200 DT E3	2017 - 2020	FL
Lifan Electric LF 1200 DT E3 Deluxe	2017 - 2020	FL

EQUIVALENTS OEM

06455-K44-D01

PART NUMBER

388

AD	K1	K5	S3	S33 RACING

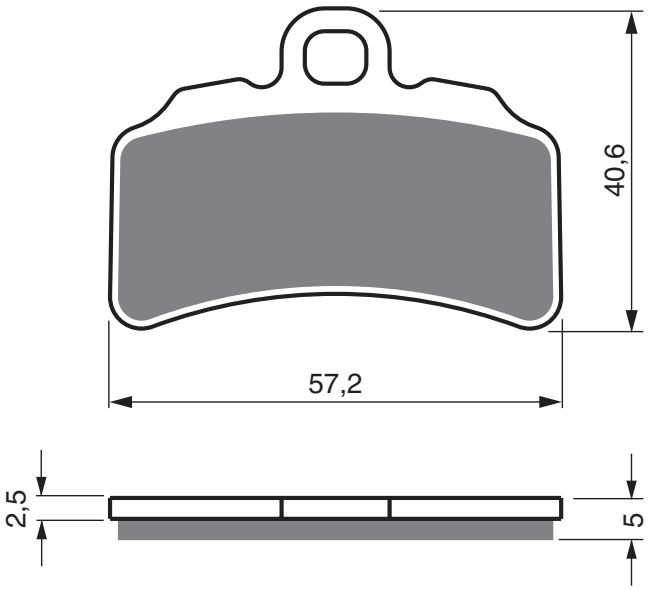

GAS GAS

TXT	125	GP	2019 - 2020	FL
TXT	125	Racing	2019 - 2020	FL
TXT	250	GP	2019 - 2020	FL
TXT	250	Racing	2019 - 2020	FL
TXT	280	GP	2019 - 2020	FL
TXT	280	Racing	2019 - 2020	FL
TXT	300	GP	2019 - 2020	FL
TXT	300	Racing	2019 - 2020	FL

MONTESA

		Cota 4 Ride	2018 - 2018	FL
4RT	260	Repsol	2018 - 2018	FL
4RT	260	Standart	2018 - 2018	FL
RR	300	Cota	2018 - 2018	FL

TRS

	125	ONE	2019 - 2020	FL
	125	RR ONE	2019 - 2020	FL
	250	RR ONE	2019 - 2020	FL
	280	RR ONE	2019 - 2020	FL
	300	RR ONE	2019 - 2020	FL

AD	K5	S3	S33 RACING

PART NUMBER

389

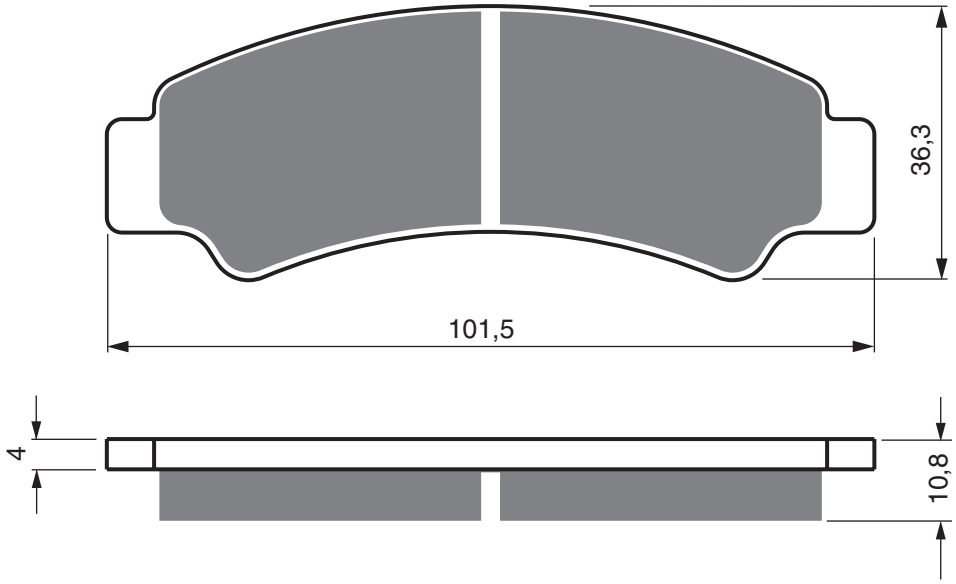

CF MOTO

C FORCE	400	AU ATV	2018 - 2018	FL	FR
C FORCE	400	S ATV	2019 - 2019	FL	FR
C FORCE	500	S Short Wheel Base ATV	2018 - 2018	FL	FR
C FORCE	500	S Short Wheel Base EPS ATV	2019 - 2019	FL	FR
U FORCE	500	HO Power Steering UTV	2018 - 2018	FL	FR
U FORCE	500	Power Steering UTV	2019 - 2019	FL	FR
Z FORCE	500	/ Z5/500 EPS Snyper SSV	2019 - 2019	FL	FR
Z FORCE	500	Z5/ 500 Snyper SSV	2018 - 2018	FL	FR
C FORCE	600		2020 - 2020	FL	FR
C FORCE	600	EPS	2018 - 2019	FL	FR
C FORCE	600	Gladiator X6	2019 -	FL	
C FORCE	800	Gladiator X800	2017 - 2018	FR	
C FORCE	800	XC Power Steering 2 Rider ATV	2019 - 2019	FL	FR
U FORCE	800	800 EX / EPS UTV	2019 - 2019	FL	FR
U FORCE	800	EX UTV	2018 - 2018	FL	FR
Z FORCE	800	/Z8/800 Trail EPS Snyper SSV	2019 - 2019	FL	FR
Z FORCE	800	Z8/800 Trail Snyper SSV	2018 - 2018	FL	FR
Z FORCE	800	Z8EX/800 EX EPS Snyper SSV	2019 - 2019	FL	FR
Z FORCE	800	Z8EX/800EX Snyper SSV 800cc	2018 - 2018	FL	FR
XC	850	Gladiator	2019 - 2019	FL	FR
Z FORCE	950		2020 - 2020	FL	FR
U FORCE	1 000		2020 - 2020	FL	FR
Z FORCE	1 000		2020 - 2021	FL	FR
Z FORCE	1 000	Z1000EX/1000EX EPS Snyper SSV 1000cc	2019 - 2019	FL	FR
Z FORCE	1 000	Z1000EX/1000EX Snyper SSV 1000cc	2018 - 2018	FL	FR

EQUIVALENTS OEM

7020-0810B0

PART NUMBER

390

AD	K5	S3	S33 RACING

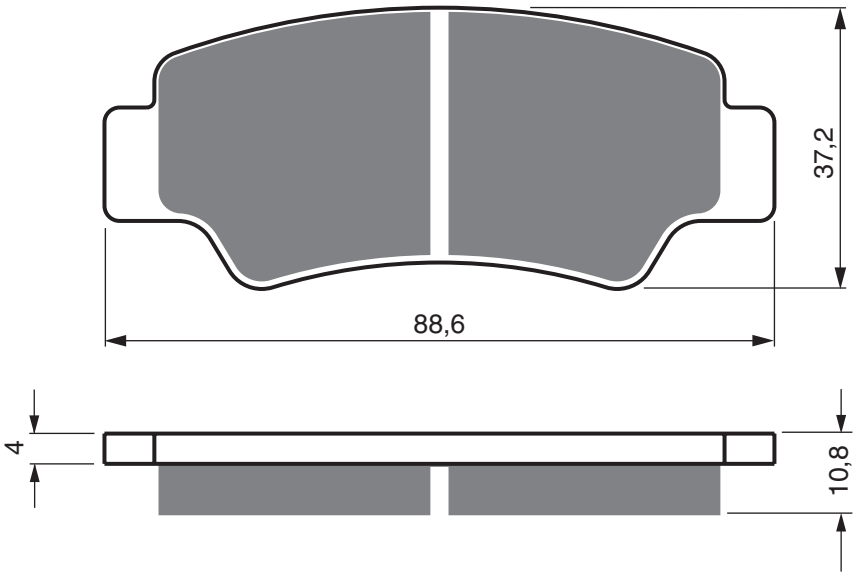

CF MOTO

C FORCE	500	S Short Wheel Base ATV	2018 - 2018	RL	RR
C FORCE	500	S Short Wheel Base EPS ATV	2019 - 2019	RL	RR
U FORCE	500	H0 Power Steering UTV	2018 - 2018	RL	RR
U FORCE	500	Power Steering UTV	2019 - 2019	RL	RR
Z FORCE	500	/ Z5/500 EPS Snyper SSV	2019 - 2019	RL	RR
Z FORCE	500	Z5/ 500 Snyper SSV	2018 - 2018	RL	RR
C FORCE	600	Gladiator X6	2019 -	RL	
C FORCE	800	Gladiator X800	2017 - 2018	RR	
C FORCE	800	XC Power Steering 2 Rider ATV	2019 - 2019	RL	RR
U FORCE	800	800 EX / EPS UTV	2019 - 2019	RL	RR
Z FORCE	800	/Z8/800 Trail EPS Snyper SSV	2019 - 2019	RL	RR
Z FORCE	800	Z8/800 Trail Snyper SSV	2018 - 2018	RL	RR
Z FORCE	800	Z8EX/800 EX EPS Snyper SSV	2019 - 2019	RL	RR
Z FORCE	800	Z8EX/800EX Snyper SSV 800cc	2018 - 2018	RL	RR
XC	850	Gladiator	2019 - 2019	RL	RR
U FORCE	1 000		2020 - 2020	RL	RR
Z FORCE	1 000	Z1000EX/1000EX EPS Snyper SSV 1000cc	2019 - 2019	RL	RR
Z FORCE	1 000	Z1000EX/1000EX Snyper SSV 1000cc	2018 - 2018	RL	RR

EQUIVALENTS OEM

7020-0810A0

AD | K5 | S3 | S33 RACING

PART NUMBER

391

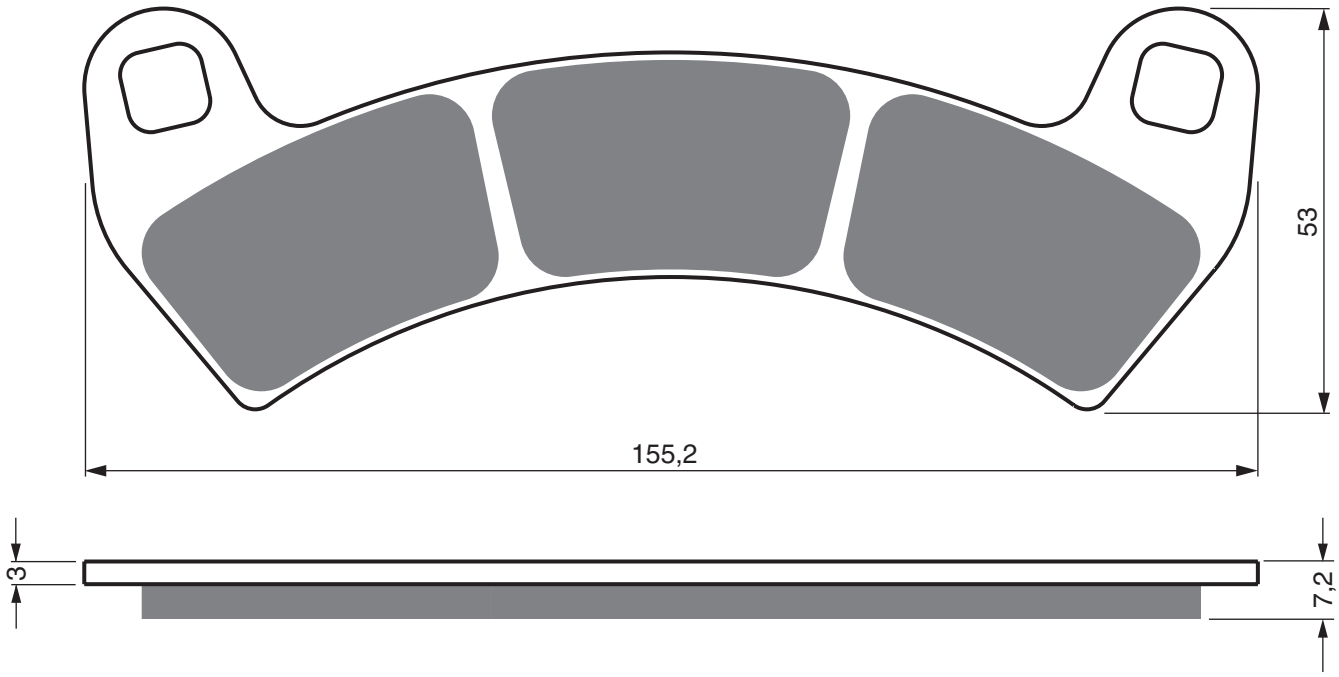

POLARIS

RZR	XP 4 Turbo	2016 - 2020	FL	FR
RZR	XP Turbo	2016 - 2020	FL	FR

EQUIVALENTS OEM

2205949

PART NUMBER

392

AD | S3

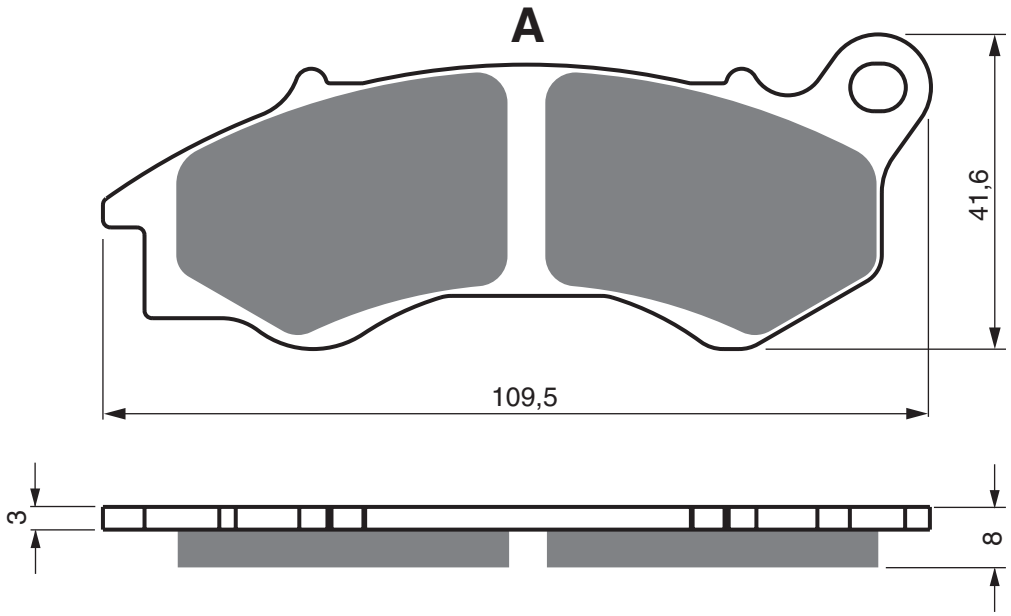

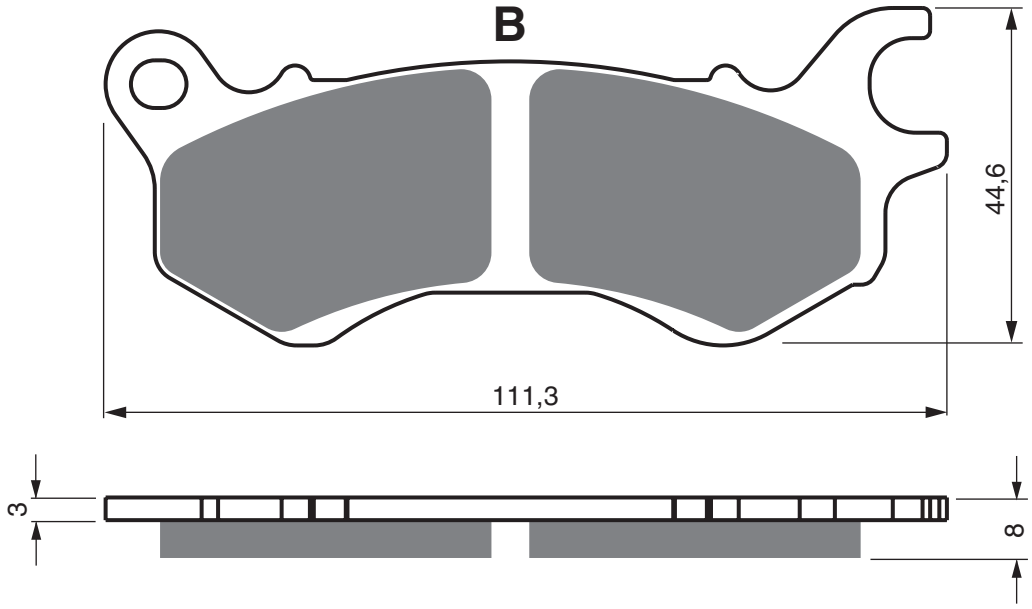

DAYTONA

DY	125	RS EURO 4	2017 - 2017	FL	

HERALD

	125	BRAT	2019 -	FL	RR
	250	BRAT	2019 -	FL	RR

EQUIVALENTS OEM

NIO124-29710

Disc Brake Pads

AD | S3 | S33 RACING

PART NUMBER

393

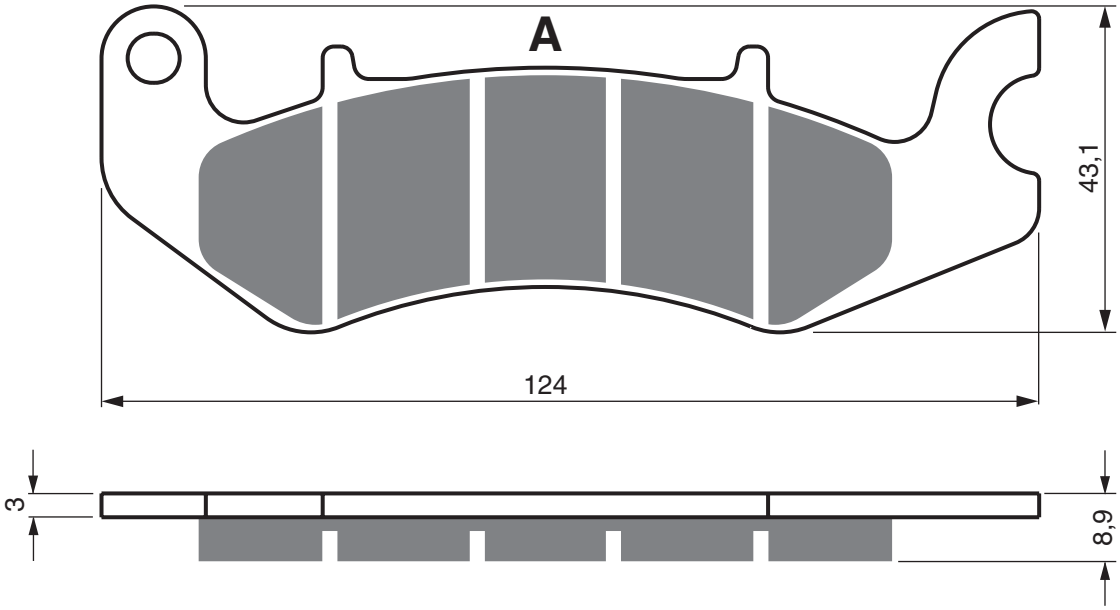

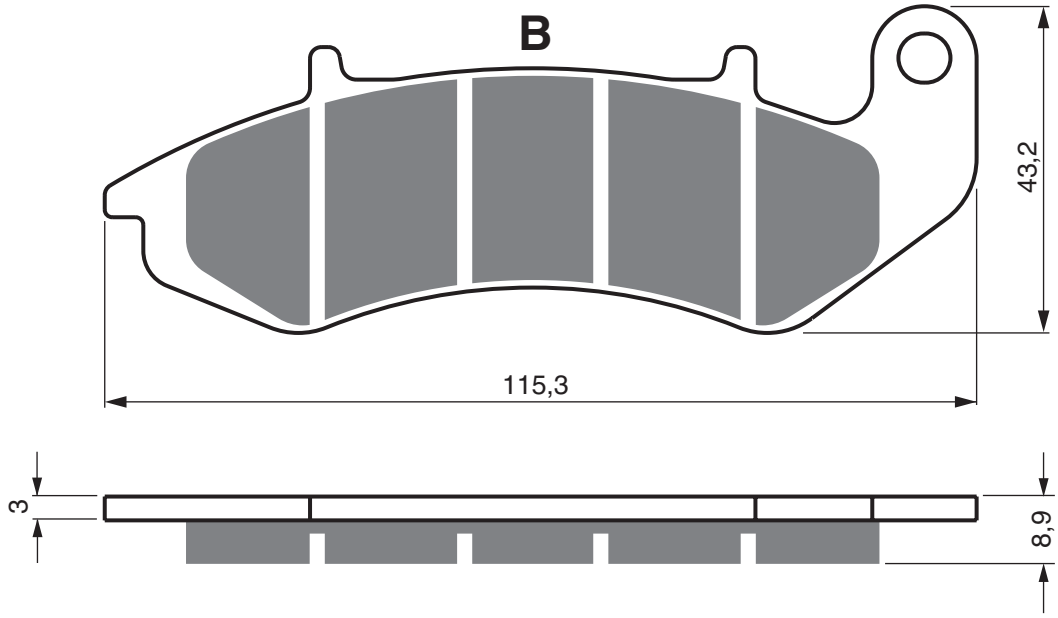

BENELLI

	125	Worx	2017 - 2018	FL
BN	125		2018 - 2021	FL
TNT	125	Tornado Naked T (125cc)	2017 - 2021	FL
TNT	135	Tornado Naked T (135cc)	2018 - 2018	FL

EQUIVALENTS OEM

45110 T74 0000

Disc Brake Pads

PART NUMBER

394

AD | S3 | S33 RACING

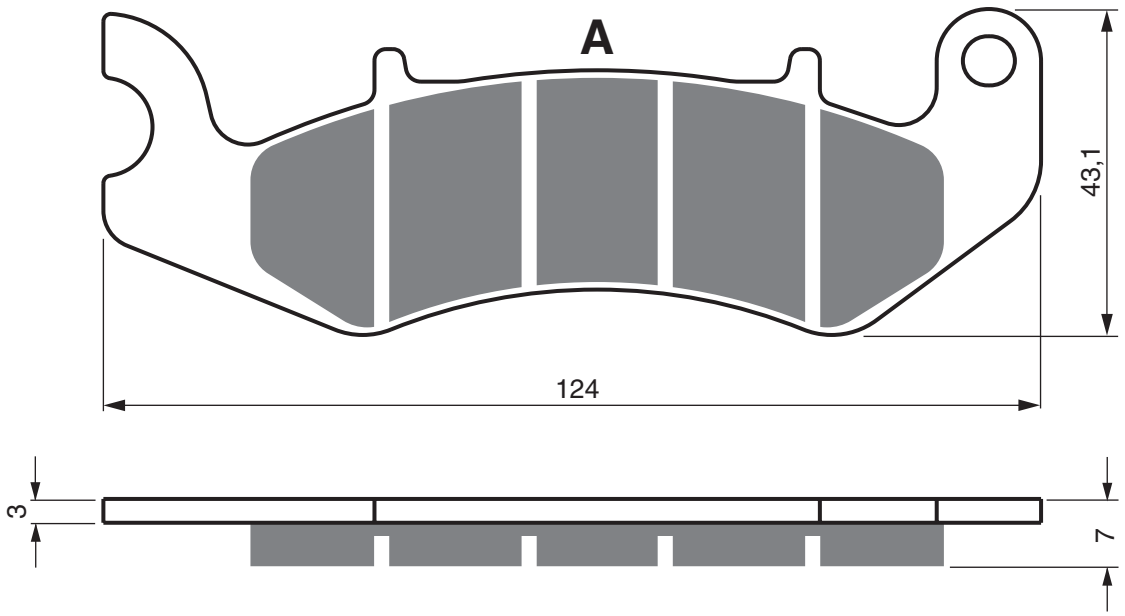

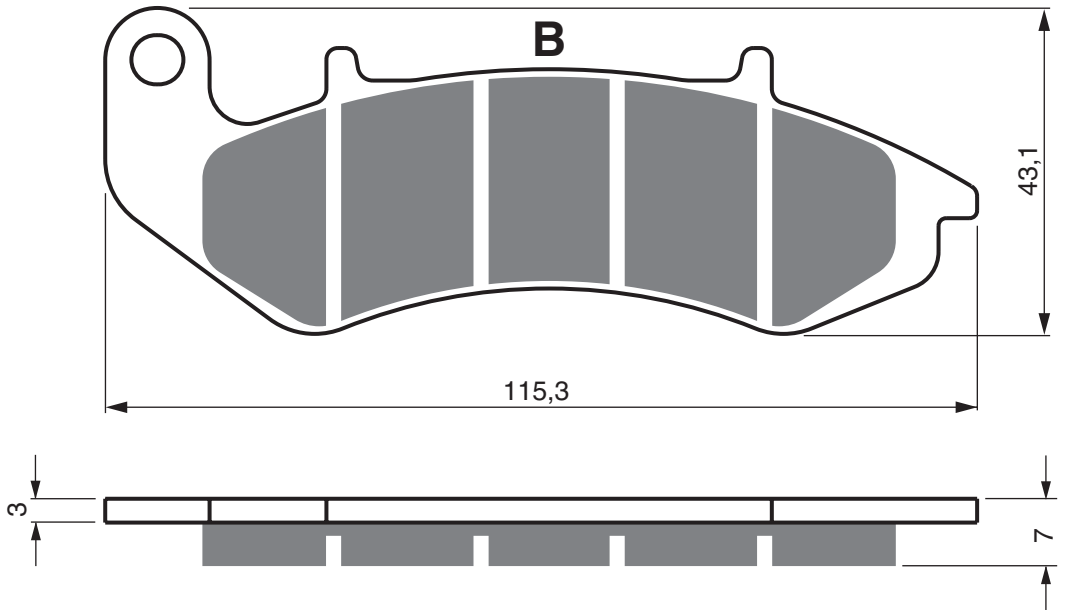

GENERIC

	50	Demonio	2017 - 2018	FL
	125	Classic	2017 - 2018	FL
	125	Code (4T)	2017 - 2020	FL
	125	Demonio	2017 - 2018	FL
	125	Sirion (Rear Disc Model) (4T)	2018 - 2020	FL
	125	Race 2 GT (4T)	2018 - 2018	FL
GRS	125		2017 - 2020	FL
TR	125	SM (4T)	2017 - 2018	FL
TR	125	X	2017 - 2018	FL
TW	125	SM	2017 - 2018	FL

KEEWAY

	125	Cityblade EURO4	2016 - 2019	FL
	125	Logik	2017 - 2019	FL
	125	Superlight Euro 4	2017 - 2019	FL
RKV	125	Euro 4	2016 - 2019	FL
TX	125	TXM	2016 - 2019	FL

EQUIVALENTS OEM

45110 T80 0000

AD | S3 | S33 RACING

PART NUMBER

395

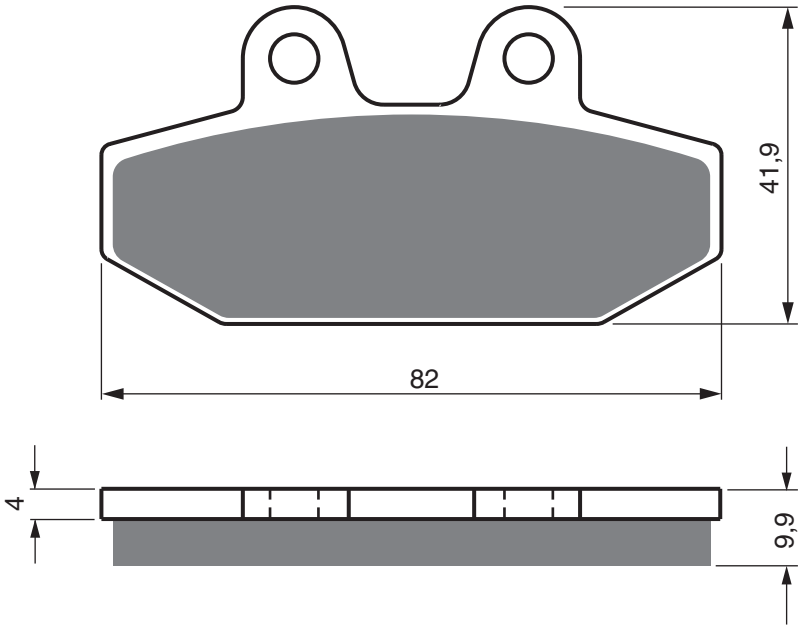

HARLEY DAVIDSON

FLHCS		Heritage Classic 114 Anniv	2018 - 2018	RR
FXBR		Breakout	2018 - 2020	RR
FXBRS		Breakout 114	2018 - 2020	RR
FXBRS		Breakout Anniv 114	2018 - 2020	RR
FXBS		Fat Bob	2018 - 2020	RR
FLDE	1 750	Softail Deluxe	2018 - 2020	RR
FLFB	1 750	Fat Boy	2018 - 2020	RR
FLHC	1 750	Heritage Classic	2018 - 2018	RR
FLSB	1 750	Sport Glide	2018 - 2020	RR
FLSL	1 750	Softail Slim	2018 - 2018	RR
FXBB	1 750	Street Bob	2018 - 2020	RR
FXBR	1 750	Breakout	2018 - 2020	RR
FXFB	1 750	Fat Bob	2018 - 2020	RR
FXLR	1 750	Low Rider	2018 - 2020	RR
FLHCS	1 870	Heritage Classic 114	2018 - 2018	RR
FLHSC	1 870	Heritage Classic	2018 - 2018	RR
FXBRS	1 870	Breakout 114	2018 - 2020	RR

EQUIVALENTS OEM

41300197

PART NUMBER

396

AD | S3 | S33 RACING

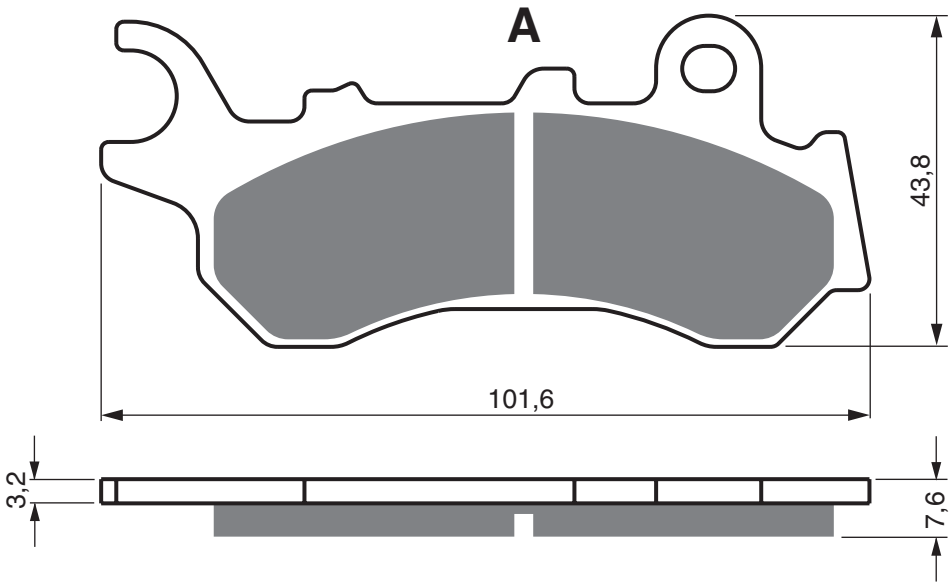

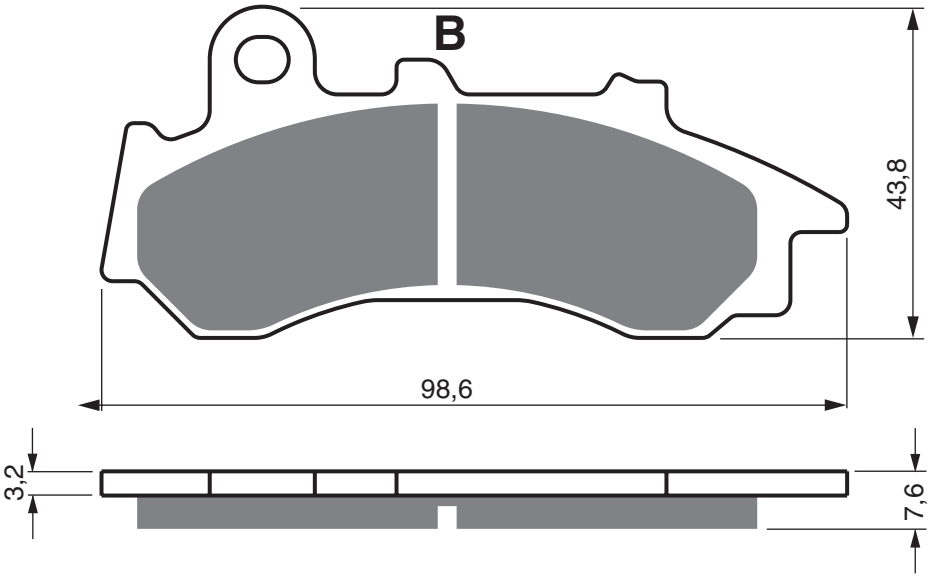

HONDA

	110	Zoomer	2019 - 2021	FL
PCX	125		2018 - 2021	FL
PCX	150		2017 - 2021	FL
PCX	150		2019 - 2020	FL

EQUIVALENTS OEM

06455 KRE K01

Disc Brake Pads

AD | S3 | S33 RACING

PART NUMBER

397

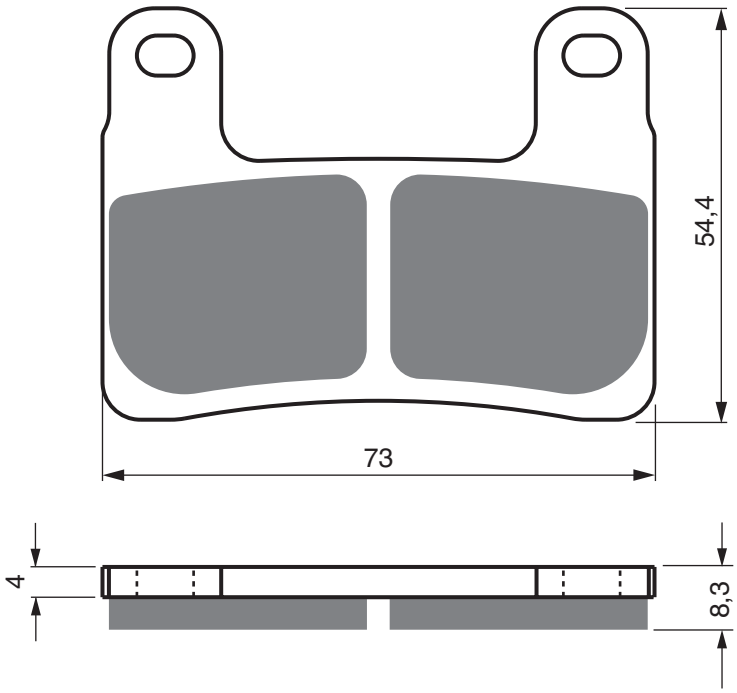

BMW

S	1 000	R	2018 - 2020	FL	FR
S	1 000	RR	2018 - 2020	FL	FR
S	1 000	RR M Sport	2018 - 2020	FL	FR
S	1 000	RR Sport	2018 - 2020	FL	FR
S	1 000	XR	2019 - 2021	FL	FR
R	1 250	GS (Disc has fixed bobbins)	2019 - 2020	FL	FR
R	1 250	GS Exclusive TE (Disc has fixed bobbins)	2019 - 2021	FL	FR
R	1 250	GS Rallye (Disc has fixed bobbins)	2019 - 2021	FL	FR
R	1 250	GS Rallye TE (Disc has fixed bobbins)	2019 - 2020	FL	FR
R	1 250	GS TE (Disc has fixed bobbins)	2019 - 2020	FL	FR
R	1 250	RT (Disc has fixed bobbins)	2019 - 2021	FL	FR
R	1 250	RT LE (Disc has fixed bobbins)	2019 - 2021	FL	FR
R	1 250	RT SE (Disc has fixed bobbins)	2019 - 2021	FL	FR

EQUIVALENTS OEM

34 118 405104

PART NUMBER

398

AD | S3 | S33 RACING

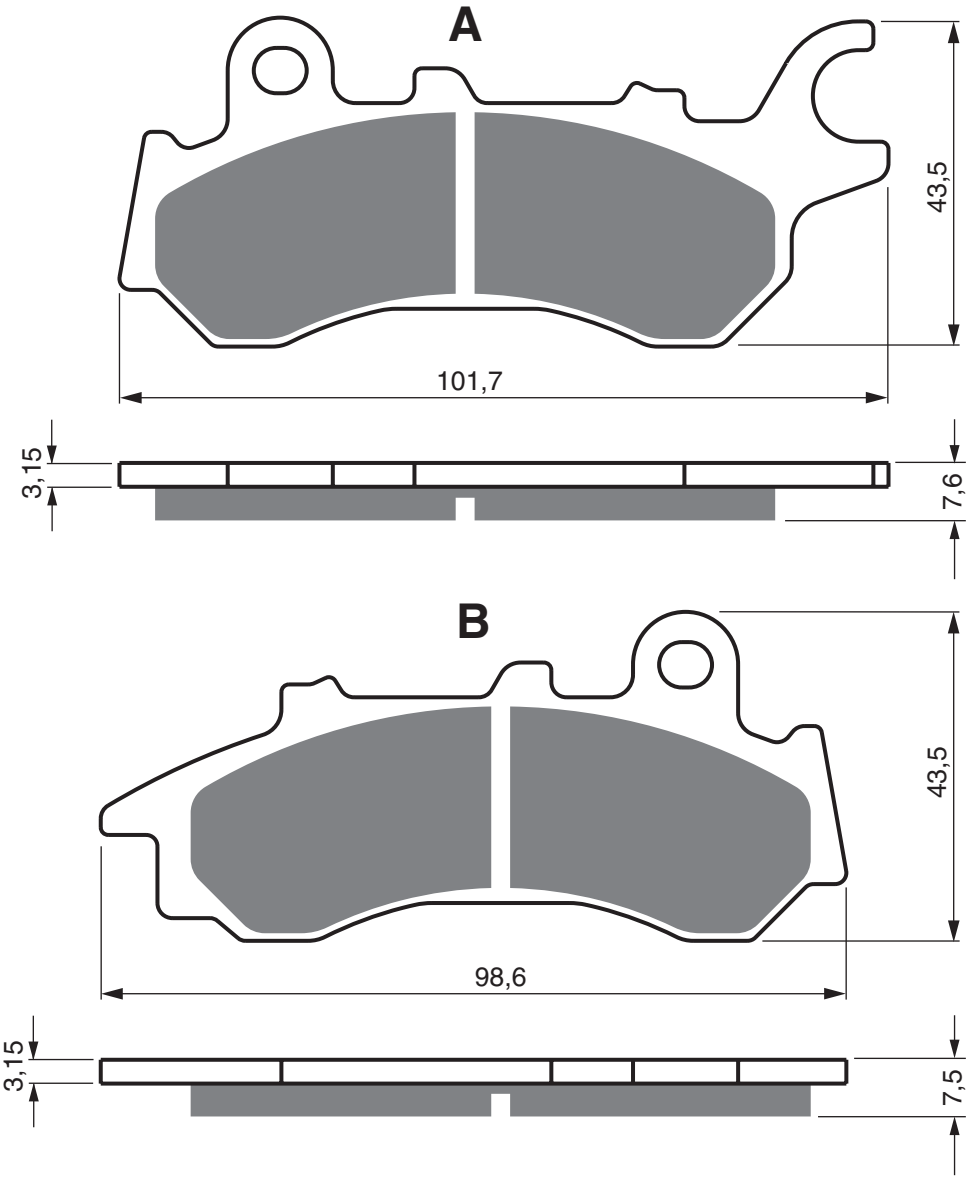

HONDA

CB	125	F	2017 - 2021	FL

Disc Brake Pads

EQUIVALENTS OEM

06455 KPN E21

AD | K1 | K5 | S3 | S33 RACING

PART NUMBER

399

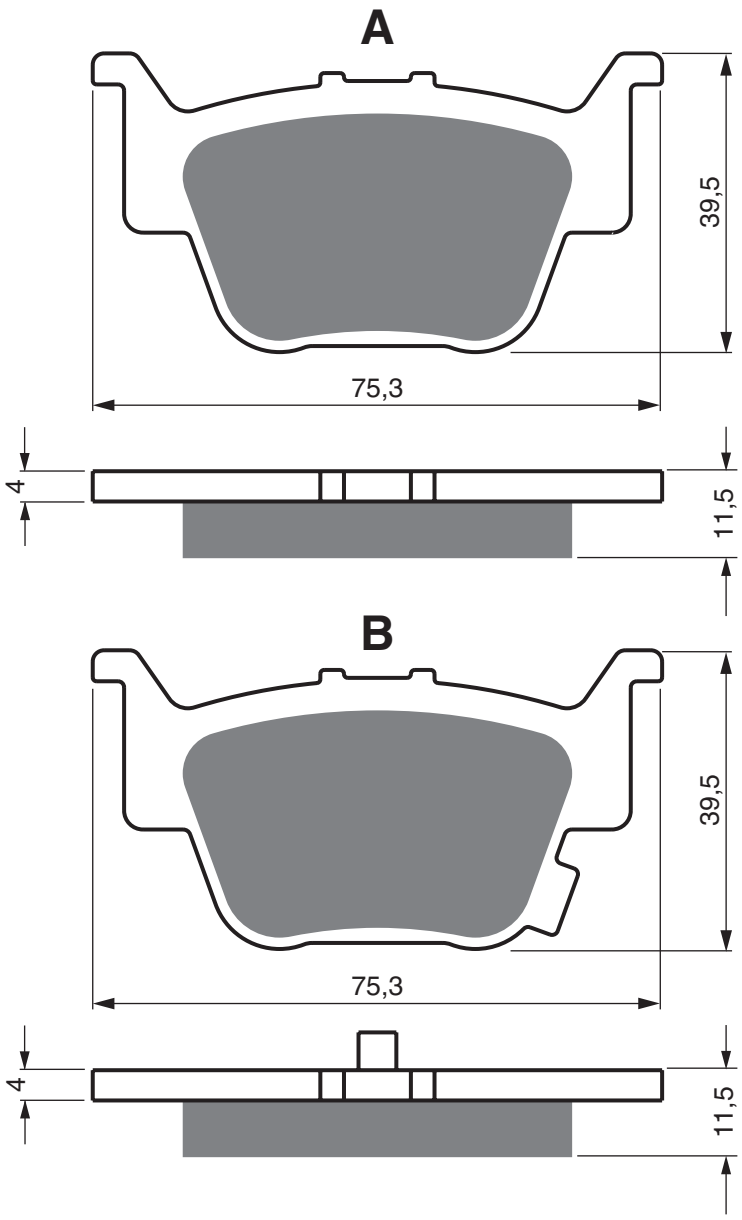

HONDA

SXS	500	M2 Pioneer (2 Seat)	2015 - 2017	RR
SXS	700	M2 Pioneer (2 Seat)	2016 - 2018	RR
SXS	700	M4 Pioneer (4 Seat)	2016 - 2018	RR

EQUIVALENTS OEM

06435 HN8 016

Disc Brake Pads

PART NUMBER

400

AD | S3

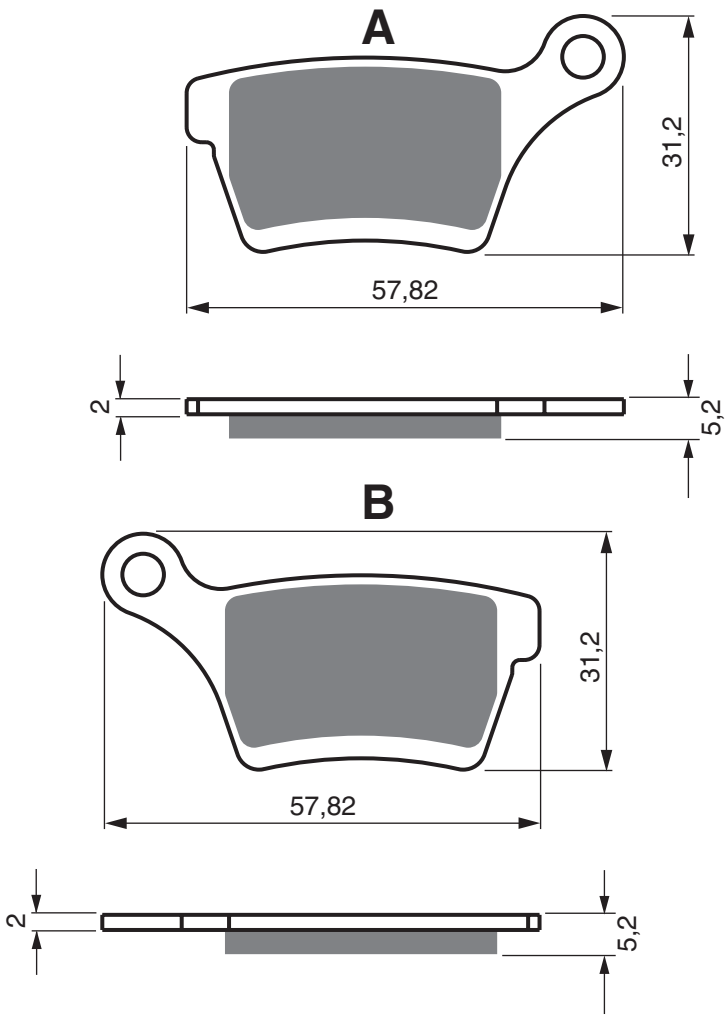

COBRA

CX	50	FWE	2018 -	FL	RR
CX	50	JR	2018 -	FL	RR
CX	50	P3	2018 -	FL	RR

EQUIVALENTS OEM

BKMU0009

AD | S3 | S33 RACING

PART NUMBER

401

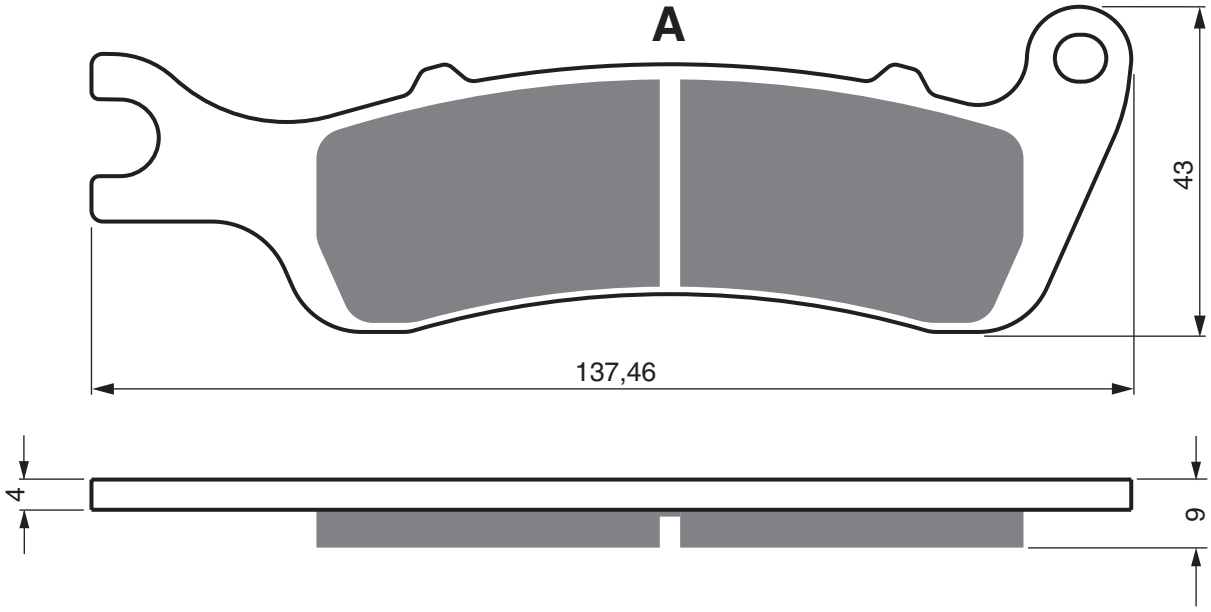

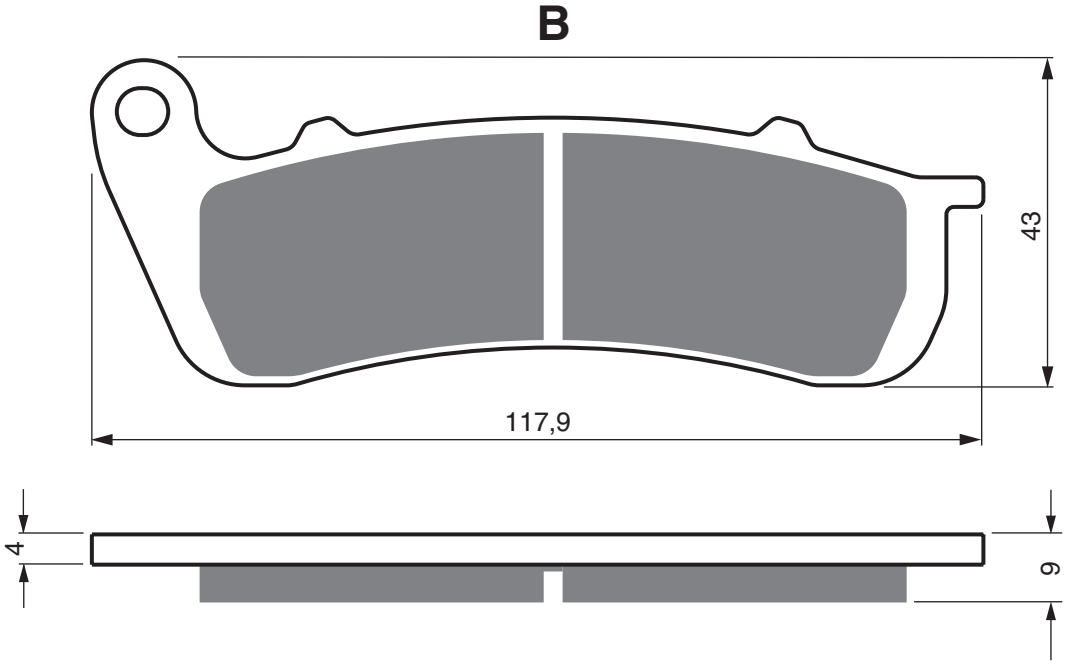

ZONTES

ZT	125	Firefly	2017 - 2019	FL
ZT	125	Mantis	2017 - 2019	FL
ZT	125	Scorpion	2017 - 2019	FL

PART NUMBER

402

AD | S3 | S33 RACING

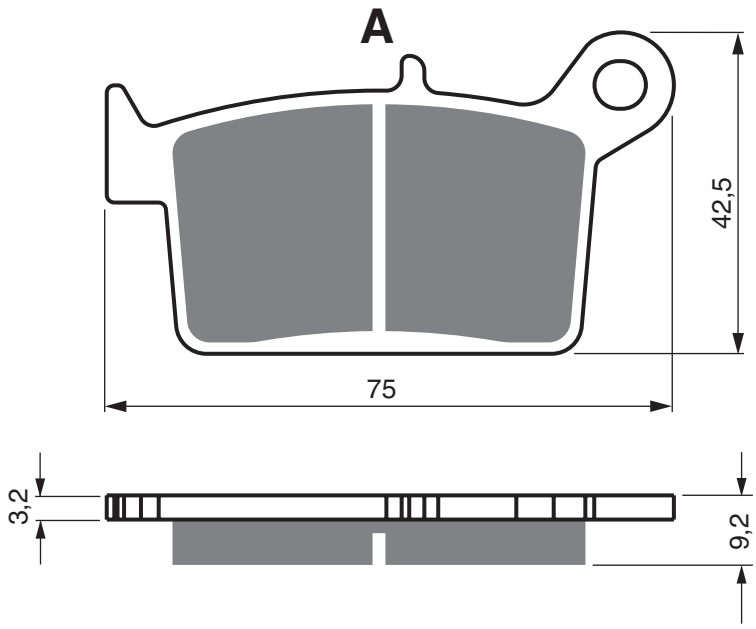

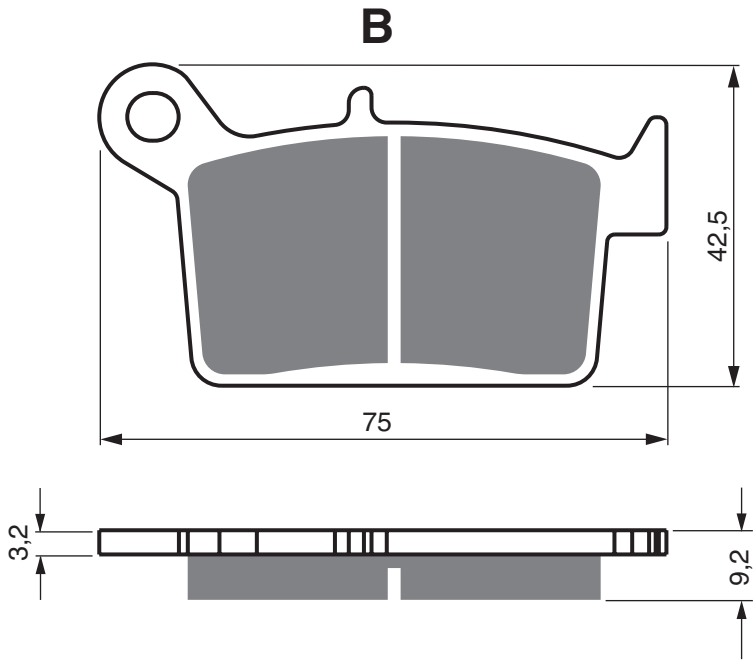

SWM

RS	125	R	2018 - 2020	RR
SM	125	R	2018 - 2020	RR
	440	Gran Milano (4T)	2016 - 2018	RR
	440	Gran Milano Boggi SE	2018 - 2018	RR
	440	Gran Turismo	2018 - 2018	RR
	440	Silver Vase (4T)	2018 - 2018	RR
	440	Six Days	2018 - 2020	RR
	500	Ace of Spades	2018 - 2020	RR
	500	Gran Milano Outlaw	2018 - 2020	RR

W.K.BIKES

WK	400	Trail	2015 - 2017	RR

EQUIVALENTS OEM

55110064

AD	K1	K5	S3	S33 RACING

PART NUMBER

403

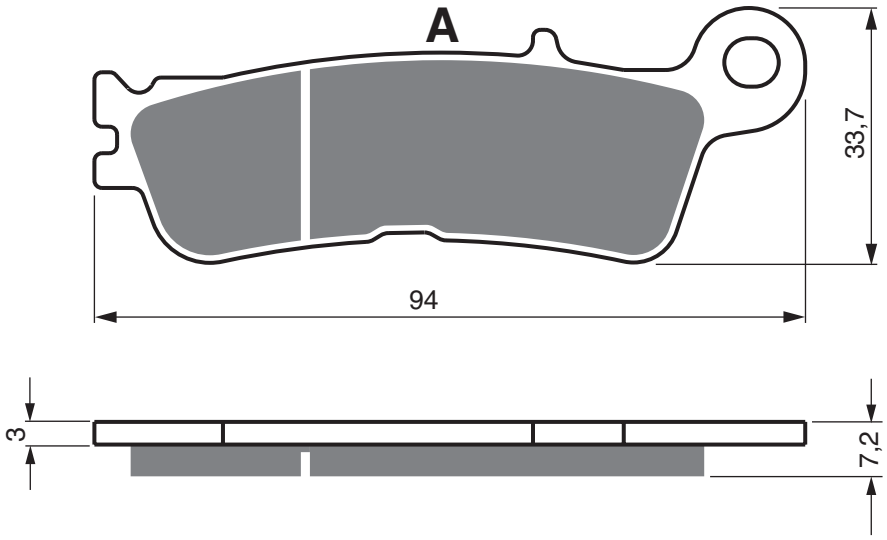

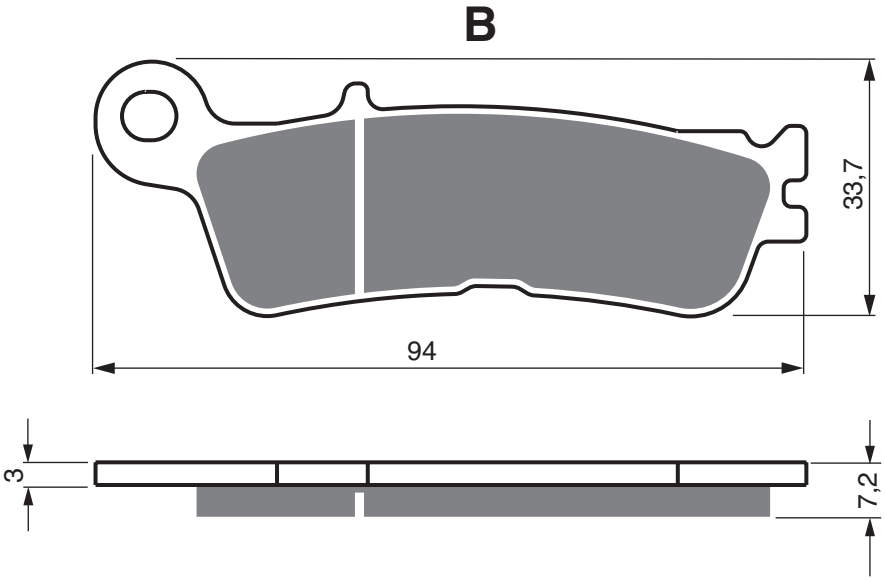

YAMAHA

YZ	250	F	2021 - 2021	FL
YZ	450	F	2021 - 2021	FL
YZF	450	Efi	2020 - 2020	FL

EQUIVALENTS OEM

B2W-25805-00

Disc Brake Pads

PART NUMBER

405

AD | S3

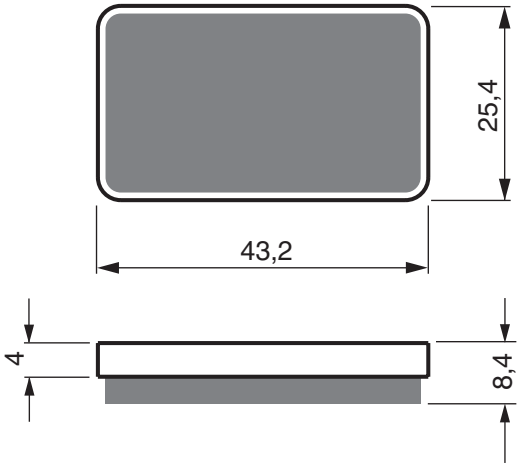

ARCTIC CAT

	250	2x4 (Manual Hand Brake)	1999 - 2004	RR
	250	4x4 (Manual Hand Brake)	2000 - 2004	RR
	300	2x4 (Manual Hand Brake)	1998 - 2004	RR
	300	4x4 (Manual Hand Brake)	1998 - 2005	RR
	375	2x4 (Manual Hand Brake)	2002 - 2002	RR
	375	4x4 (Manual Hand Brake)	2002 - 2002	RR
	400	2x4 (FIS) (Manual Hand Brake)	2002 - 2004	RR
	400	2x4 (FIS) Aut. (Manual Hand Brake)	2003 - 2004	RR
	400	2x4 (Manual Hand Brake)	1998 - 2002	RR
	400	4x4 (FIS) (Manual Hand Brake)	2002 - 2004	RR
	400	4x4 (FIS) Aut. (Manual Hand Brake)	2003 - 2004	RR
	400	4x4 (Manual Hand Brake)	1998 - 2004	RR
TBX	400	4x4 (Manual Hand Brake)	2004 - 2004	RR
	454	Bear Cat 2x4/4x4 (Manual Hand Brake)	1998 - 1998	RR
	500	2x4 (FIS) (Manual Hand Brake)	2002 - 2002	RR
	500	2x4 (Manual Hand Brake)	2002 - 2002	RR
	500	4x4 (FIS) (Manual Hand Brake)	2002 - 2003	RR
	500	4x4 (FIS) Aut. (Manual Hand Brake)	2002 - 2003	RR
	500	4x4 (Manual Hand Brake)	1998 - 2002	RR
TBX	500	4x4 (Manual Hand Brake)	2003 - 2004	RR
TBX	500	4x4 Aut (Manual Hand Brake)	2002 - 2002	RR
TRV	500	4x4 (Manual Hand Brake)	2003 - 2004	RR

AD | K5 | S3 | S33 RACING

PART NUMBER

406

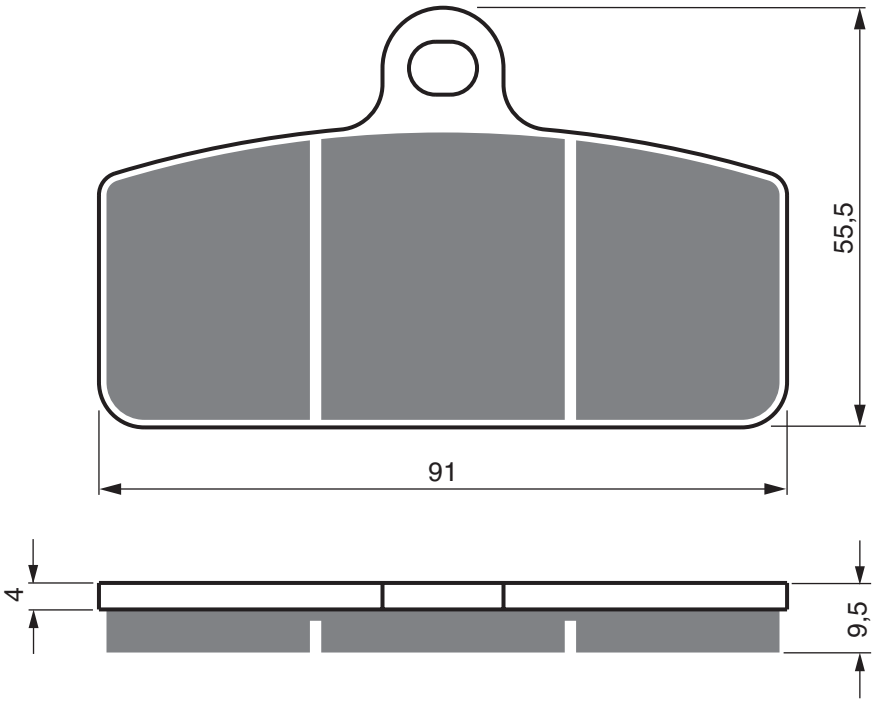

J. JUAN

Big Brake Kit X3 FL

Disc Brake Pads

PART NUMBER

435

K5

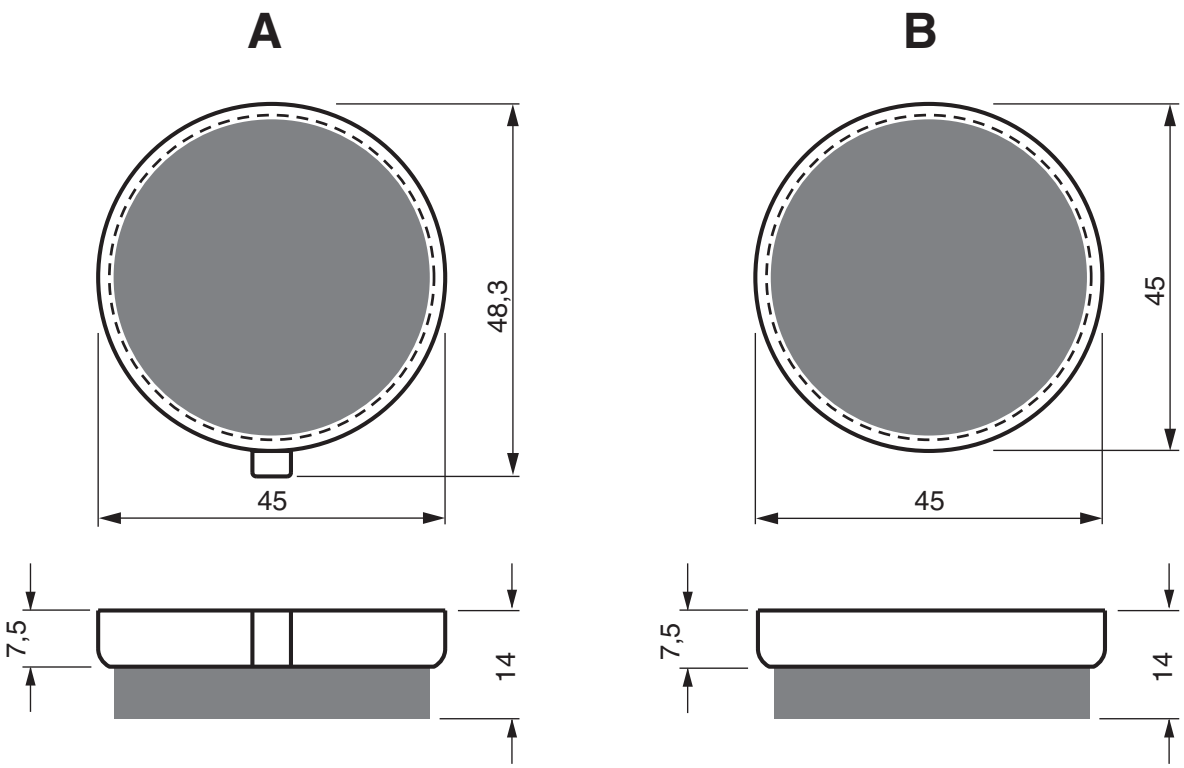

YAMAHA

Viking II, III RR

GOLD fren	SBS	EBC	FERODO	TYP
001	632	FA 152	FDB 659	M
002	611	FA 135	FDB 497	M
003	604	FA 131	FDB 539	M
004	603	FA 125	FDB 495	M
005	546	FA 67,372	FDB 314	M
006	608	FA 134	FDB 499	M
007	562, 592	FA 84	FDB 381	M
008	559		FDB 405	S
009	638	FA 165,FA 215	FDB 631	M
010	108,588, 696	FA 256	FDB 438	M
011	551	FA 86	FDB 312	M
012		FA 69/3		R
013	597	FA 129	FDB 481	R
014	630, 700	FA 196, 226	FDB 664	R
015	555	FA 88	FDB 337	R
016	556	FA 63,161	FDB 338	R
017	624, 714	FA 145,236	FDB 557	R
018	575	FA 101	FDB 383	M
019	601	FA 126	FDB 498	R
020	614	FA140	FDB 531	R
021	657	FA 174	FDB 754	R
022	627, 654	FA 142	FDB 570	R
023	675	FA 208, 213	FDB 2005	M
024	647	FA 124/2	FDB 663	R
025	593	FA 121, 203	FDB 462	R
026	621	FA 132	FDB 561	R
027	620	FA 146	FDB 569	R
028	645	FA 160	FDB 666	R
029	596	FA 118	FDB 583	R
030	581	FA 106	FDB 404	R
031	671, 742	FA 181	FDB 2018 / 2039R	M
032	631	FA 158	FDB 574	R
033	650	FA 172	FDB 737	R
034	589	FA 119	FDB 2015	R
035	602	FA 130	FDB 494	R
036	626	FA 147	FDB 606	R
037	557	FA 85	FDB 339	R
038	519, 744	FA 47	FDB 207	R
039	686	FA 188	FDB 873	R
041	694	FA 185	FDB 892	M
042	548	FA 83/2	FDB 313	M
043	580	FA 105	FDB 411	R
044	615	FA 141	FDB 508	R
045	665	FA 182	FDB 637	R
046	582	FA 106/2	FDB 673	R
047	544	FA 83	FDB 313	M
048	663	FA 179	FDB 781	R
049	572	FA 69/2	FDB 244R	R
050	542	FA 69	FDB 244	R
051	600	FA 124	FDB 452	R
052	623	FA 143	FDB 496	R
054	683	FA 190	FDB 864	R
055	685	FA 189	FDB 2002	R
056	669	FA 200	FDB 2001	R HD
057	579	FA 94	FDB 352	R HD
058	549	FA 78	FDB 335	R HD
059	537	FA 71	FDB 333	R HD
060	513	FA 24/2	FDB 185	R HD
061	553	FA 79		R HD
062	543	FA 72	FDB 334	R HD
063	668	FA 201	FDB 485	R HD
064	566	FA 95	FRP 408	R
065	635	FA 157	FDB 607	R

GOLD fren	SBS	EBC	FERODO	TYP
066	672	FA 156	FDB 866	R
067	570	FA 104	FDB 386	R
068	526	FA 45	FDB 183	R
069	622	FA 144, 187	FDB 533	R
070	634, 639	FA 168, 252, 380	FDB 605	R
071	673, 690	FA 131/2 , 233	FDB 783	R
072	640, 554	FA 171	FDB 736	R
073	590, 613	FA 123	FDB 449	R
074	587	FA 110	FDB 437	R
075	533	FA 51	FDB 218	R
076	512	FA 36	FDB 151R	R
077	584	FA 84/3	FDB 661	M
078	517	FA 31		R
079	517	FA 30	FDB 182	R
080	508	FA 29	FDB 182	R
081	506	FA 18	FDB 108	R
082	507	FA 34	FDB 177	R
083	583	FA 47/2		S
084	586	FA 67/3	FDB 314	R
085	577	FA 103	FDB 389	R
086	541	FA 67/2	FDB 731	S
087	646	FA 47/3	FRP 416	M
088	633, 688	FA 215/2, FA 165/2	FDB 631	R
089	641	FA 163	FDB 529	R
090	666	FA 180	FDB 741	R
091	591	FA 128	FDB 2013	R
092	649	FA 137	FDB 2016	M
093	687	FA 192	FDB 2012R	R
094	651, 684, 692	FA 173, 382	FDB 828	R
095	148,652	FA 167	FDB 706	M
096	106,574	FA 60	FDB 694	S
097	699	FA 198		R
098	697, 725	FA 193	FDB 680	S
099	691	FA 199	FDB 2003	R
100	648	FA 152/2	FDB 659	M
101	594	FA 120	FDB 592	R
102	558	FA 92/3, 323/2	FDB 382 / 2119	M
103	709	FA 92/2, 323/3		M
104	705	FA 229	FDB 2048	R
105	681	FA 177	FDB 782	R
106	674	FA 209	FDB 2006	R
107	667	FA 206	FDB 889	S
108	726	FA 258	FDB 2080	M
109	702	FA 230	FDB 2133	M
110	670, 643	FA 178 = now 257	FDB 625	M
111				R
113	550	FA 81	FDB 311	R
114	111,619	FA 169	FDB 636	S
115	607	FA 116	FDB 697	S
116	695	FA 218	FDB 2007	R
117	703, 644	FA 246 - 407	FDB 657	R
118	680	FA 186	FDB 784	S
119	655, 656	FA 175	FRP 415	R
120	595	FA 99	FDB 436	S
121	105,559	FA 115	FRP 405	S
122	689	FA 194	FDB 677	M
123	677			R
124	704	FA 231	FDB 2049	R
126	676, 729	FA 249, 424	FDB 2036	R
127	539, 540	FA 66	FDB 299	R
128	731	FA 268	FDB 2062	S
129	701	FA 222	FDB 2058	R
130			FDB 2034	R

GOLD fren	SBS	EBC	FERODO	TYP
131	710	FA 234	FDB 2101	S
132	662, 678	FA 216, FA 420	FDB 2040/H	R
134	734	FA 296, 265	FDB 2114	R
135	722	FA 281, FA 261/2	FDB 2075	R
136	141,723	FA 235		S
137	724	FA 260	FDB 2056	S
138	534	FA 65	FDB 217	R
139		FA 361 HH	FDB 2033	R
140	775	FA 355	FDB 2141	S
141	706, 727	FA 244	FDB 2042	R
142	712	FA 255	FDB 2037	S
143	815	FA 291	FDB 2103	S
144	536	FA 54	FDB 250	M
145				R
146	728	FA 275	FDB 2083	R
147	146	FA 283	FDB 2085	R
148	715,984	FA 262, 254	FDB 2111	R
149	598	FA 122		R
150	747	FA 298	FDB 2090	S
151	547	FA 70	FDB 277	R
152	730	FA 266	FDB 2074	R
153				S
155	753	FA 358	FDB 2130	R
158	659	FA 162	FDB 2194	R
159	532	FA 50	FDB 213	S
161	110,618	FA 151		S
162	716, 642	FA 159	FDB 2055	M
165	768, 769	FA 319/2	FDB 2126, FDB 2156	R
166	527	FA 57		R
167	752	FA 302	FDB 2110	M
168	802	FA 303	FDB 2109	M
169	733	FA 267	FDB 2084	R
170	748	FA 301	FDB 2095	S
171	509	FA 32	FDB 134	R
172	578	FA 102	FDB 390	R
173	803	FA 351	FDB 2127	S
174	708	FA 264	FDB 2106	S
175	732		FDB 2171	R
176	777	FA 346	FDB 2139	M
177	762	FA 322/4HH	FDB 2120	R
178	721, 735, 736	FA 261	FDB 2098	R
179	755	FA 270	FDB 2121	R
180	636	FA 164		S
181	750	FA 299 = now FA 400	FDB 2097	R HD
182	754	FA 307	FDB 2148	M
183	749	FA 305	FDB 2096	M
184	560	FA 76	FDB 205	S
185	783	FA 357	FDB 2157	M
186	772	FA 321	FDB 2115	S
187	790	FA 367	FDB 2162	M
188		FA 323	FDB 2119	M
190	794	FA 325 TT	FDB 2183	S
191	791	FA 368	FDB 2165	M
192	776	FA 356	FDB 2140	S
193	761	SFA 324	FDB 2105	S
194	778	FA 294HH	FDB 2124	R
195	746	FA 304	FDB 2102	R
196	796	FA 335HH	FDB 2125	R
197	554	FA 077	FDB 204/R	R
198		FA 303	FDB 2109	S
199		FA 351	FDB 2127	S
200	788	FA 369/4HH	FDB 2164	R
201		FA 352		S

GOLD fren	SBS	EBC	FERODO	TYP
202				S
203	759		FDB 2170	R
204	682	FA 191	FDB 865	R
205	767	FA 317	FDB 2149	M
206	789	FA 366	FDB 2163	R
207	782	FA 347	FDB 2158	R
208	757	FA 313R	FDB 2177	ATV
209	787	FA 314R	FDB 2176	ATV
210	797	FA 375	FDB 2169	R
211	773	FA 350	FDB 2128	S
212		MXS 406		R
213	806	FA 379		R
214	809	FA 390	FDB 2213	R
215	780	FA 374	FDB 2147	R
216	717	FA 232		M
217				R
218	785	GFA 315		R
219				R
220				R
221	784	FA 343	FDB 2143	R
222	770	FA 348		R
223	793	FA 113	FDB 2146	R
224	764	FA 336		S
225	779	FA 249/2	FDB 2036	R
226	820	FA 401	FDB 2197	M
227				R
228		FA 403		S
229	766			R
230	810	FA 377	FDB 2184	R
231	842	MXS 405		R
232	758	FA 271	FDB 2175	ATV
233	821	FA 399	FDB 2201	R
234	749	FA 306	FDB 2108	S
235	763	FA 320	FDB 2198	R
236	756	FA 273R	FDB 2135	R
237	745	FA 297	FDB 2129	R
238	843	FA 433/4	FDB 2244	R
239	805	FA 435/4 HH	FDB 2166	R
240	829	FA 410		R
241	833	FA 419	FDB 2213	R
242	834	FA 436	FDB 2221	R
243	813	FA 373	FDB 2182	ATV
244	846	FA 434	FDB 2202	R
245	801	FA 342	FDB 2188	R
246	839	FA 442/4HH	FDB 2217	R
247	713	FA 214/2		R
248	840	FA 450TT	FDB 2219	M
249	838	FA 417/4HH	FDB 2220	R
250	211	FA 448		R
251	214,844	FA 432	FDB 2216	S
252	850	FA 443 TT	FDB 2231	ATV
253	849	FA 444 TT	FDB 2230	ATV
254	822	FA 395	FDB 2303	ATV
255	852	FA 445 TT	FDB 2233	ATV
256	851	FA 446 TT	FDB 2232	ATV
257	828	FA 388 HH	FDB 2196	R
258	841	FA 447 HH	FDB 2260	R
259				R
260	867	FA 463		ATV
261	866	FA 462 TT		ATV
262	837	SFA 430	FDB 2208	R
263	831	SFA 425		R
264	858	FA 464	FDB 2238	R

GOLD fren	SBS	EBC	FERODO	TYP
265	804	SFA 412		R
266	818	SFA 418	FDB 2186	R
267	781	SFA 411		R
268	812	SFA 408	FDB 2200	R
269	856	FA 454/4	FDB 2240	R
270	795	FA 345	FDB 2145	R
271	830	FA 409		R HD
272	807	FA 381	FDB 2179	R HD
273	854	FA 458	FDB 2251	R HD
274	808	FA 387	FDB 2180	R HD
275	853	FA 457	FDB 2250	R HD
276		FA 405		R
277	862	FA 488	FDB 2253	R
278	859	FA 465		R
279	860	FA 296		R HD
280	716	FA 650		ATV
281	799	FA 344		ATV
282		FA 495		R
283	848	FA 431		ATV
284	914	FA 453		ATV
285				M
286	201/847	FA 427, FA 607	FDB 2226/2254	R
287	832	SFA 415	FDB 2212	ATV
288	855	FA 416		M
289	585	FA 93	FDB 384	M
290	857	FA 460		R
291		FA 468	FDB 2271	M
292	742	FA 363	FDB 2039	R
293		SFA 353		M
294		FA 482		ATV
295	816	FA 428	FDB 2235	ATV
296	864	FA 491	FDB 2252	R
297	872	FA 602	FDB 2257	M
298	869	FA 499/4	FDB 2259	R
299	205	FA 603	FDB 2256	R
300		FA 475		ATV
301	GOLDfren	GOLDfren		R
302	204,195	SFA 498	FDB2248	R
303	879	SFA 257/2		S
304	870	FA 604/4HH	FDB 2255	R
305	877	FA 606	FDB 2266	R
306	881	FA 496	FDB 2258	R
307	885	FA 612	FDB 2262	M
308				S
309	911	FA 618	FDB 2274	ATV
310	910	FA 617	FDB 2273	ATV
311	915	FA 629	FDB 2275	R
312	800	FA 354R	FDB 2236	ATV
313	897	FA 452R/656	FDB 2263	ATV
314		FA 600/2TT		ATV
315		FA 398		ATV
316	945	FA 600 TT		ATV
317		FA 497 TT		ATV
318		FA 613		R
319				M
320				M
321		FA 654		R
322	616	FA 136	FDB 591	R
323	892	FA 636	FDB 2281	R
324				R
325	939	FA 644		M
326	740	FA 423/4		R
327	880	FA 261/2		R

GOLD fren	SBS	EBC	FERODO	TYP
328	900	FA 630	FDB 2265	R
329	210/878	FA 484 TT		R
330	208	SFA 492	FDB 2264	R
331	215	SFA 627	FDB 2291	R
332	119	FA 197	FDB 2087	R
333	877/212	SFA 608	FDB 2288	R
334	713	FA 228	FDB 497	R
335	948	FA 631		R
336	216	FA 691	FDB 2282	
337		FA 489		ATV
338		FA 477		R
339		FA 476		R
340		FA 479		R
341		FA 478		R
342	905	FA 490		ATV
343	898	FA 456, 657		ATV
344		FA 486		S
345		FA 642	FDB 2301	ATV
346		FA 367/2		M
347	912	FA 610		R
348		FA 678		R
349	924	FA 643		R
350		FA 721		R
351				R
352	922	FA 638		R HD
353	923	FA 641/4		R HD
354	904	FA 605/4		R HD
355		SFA 607		R
356		FA 609		ATV
357	222	FA 655	FDB 2296	S
358	223		FDB 2297	R HD
359	934	FA 640	FDB 2299	R
360	218	SFA 628	FDB 2292	S
361	933	FA 658		ATV
362		FA 651		R
363	207	SFA 632	FDB 2284	M
364		FA 634 TT		R
365	698	FA 016	FDB 342 R	R
366	928	FA 654		S
367	858	SFA 661/4		R
368	655	FA 184		R
369	931	FA 663	FDB 2280	R
370	932	FA 662	FDB 2283	
371				
372				ATV
373	835	FA 413		ATV
374	836	FA 414		ATV
375		FA 685 TT		ATV
376	956	FA 683 TT	FDB 2316	ATV
377		FA 684 TT	FDB 2317	ATV
378	957	FA 682 TT		R
379	940	FA 679 HH	FDB 2296	R
380		SFA 694	FDB 2290	R
381	951	FA 715	FDB 2287	R
382		FA 703		ATV
383		FA 701		ATV
384		FA 702		ATV
385		FA 704		ATV
386	947	FA 700	FDB 2300	R
387		FA 708	FDB 2289	S
388	963			M
389		FA 726		R/ATV
390		FA 747		R/ATV

GOLD fren	SBS	EBC	FERODO	TYP
391	954	FA 680		R/ATV
392		FA 709		R
393	968	FA 711		R
394	961	FA 707		R
395	949	FA 710	FDB 2306	R HD
396		FA 723	FDB 2319	R
397	960	FA 724	FDB 2321	R
398	958	FA 716	FDB 2313	R
399				ATV
400				M
401		FA 727		R
402		FA 697		M
403	965			M
404				M
405	827			ATV
406	959			S x ATV

ATV quad, čtyřkolky
M motokros, motocross
S scooter, skútrové
R road, silnice
HD Harley Davidson

Installation Instructions

- **Verify the correct selection of the brake pads at the dealer's in accordance with the bike type and manufacturing year of your bike.**
- **Replace the brake pads as soon as the braking surface thickness has dropped below 2 mm.**
- **Protect the brake pad surfaces against grease, oil and other chemical substances.**
- **Clean and degrease the brake wheels prior to installation of new brake pads.**
- **Replace damaged brake wheels reducing the braking effect and, at the same time, shortening the lifetime of the brake pads.**
- **Install the brake pads directing their braking surfaces towards the brake wheel. Having completed the installation, check correct mounting and securing of the pads.**
- **Entrust a specialized servicing shop with the installation of brake pads when lacking experience.**
- **TÜV Saarland automobil GmbH – TÜV Rheinland Group certified.**

Running-In New Brake Pads

The correct way of running-in newly installed brake pads is the prerequisite for their long lifetime and for a reliable braking effect of the bike brakes. If possible, do not provide your motorbike with new brake wheels during running--in new brake pads.

Cleaning of the brake wheels using abrasive paper is recommended in case of their previous use with another lining material. After the installation of the brake pads, their fitting must be free and without excessive clamping in the brake mount.

Having revved up your bike, brake several times at lower speeds to achieve a contact surface of 80 to 90 per cent of the total area of the active brake pad surface between the brake wheel and the pads. Then brake the bike several times at higher speeds and allow the brake pad lining to get cooled while driving. After this running-in procedure, the brake pads may be normally used.

GOLD fren

Sintered MTB Brake Pads with high braking effectivity temperature stability 800° C

GF-803

AD | DS | SW33

Magura Louise-2003/Clara 2000

22,6 × 33,35 × 3,9

GF-804

AD | DS | SW33

Magura Clara 2001/Louise- fr

43,1 × 24,9 × 4

GF-807

AD | DS | SW33

Shimano XT
Hydraulic Caliper
& Grimeca System

37 × 25,2 × 3,6

GF-808

AD | DS | SW33

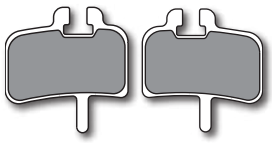

Hayes (Mechanical & Hydraulic)

A/B: 31,9 × 32,5 × 3,9

GF-809

AD | DS | SW33

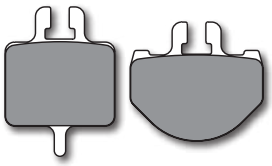

A+B Grimeca Hydraulic Caliper
A+B Grimeca Mechanical Caliper

A: 29 × 40 × 3,9
B: 35,1 × 31,5 × 3,9

GF-810

AD | DS | SW33

Tektro Gemini/Novela

25,4 × 37,3 × 3,9

GF-811

AD | DS | SW33

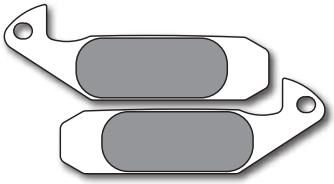

Magura Gustav M 2004

A/B: 70 × 25,4 × 3,5

GF-813

AD | DS | SW33

Shimano Deore/BR-M5 15 Mechanical
M475/C601, 501 BR 525 - Hydraulic
Shimano BR-M445/446

30,75 × 35,1 × 3,9

GF-814

AD | DS | SW33

RST Mechanical Caliper

24,8 × 37,22 × 4

GF-815

AD | DS | SW33

Cannondale (Coda) Caliper

30,6 × 30,6 × 4

GF-816

AD | DS | SW33

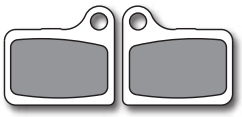

Shimano Deore/BR-901C
Naxave BR-M555 Hydraulic

A/B: 29,1 × 26,18 × 4

GF-818

AD | DS | SW33

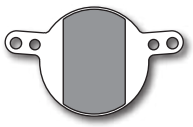

Magura Julie

47,1 × 28,85 × 4

GF-819

AD | DS | SW33

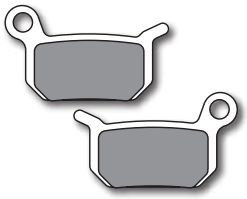

Formula B4 Hydraulic

A/B: 43,19 × 25 × 3,9

GF-820

AD | DS | SW33

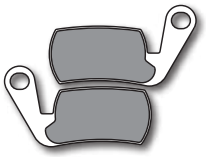

Magura Marta, Marta SL

A/B: 38,8 × 21,32 × 3,9

GOLD fren

Sintered MTB Brake Pads with high braking effectivity temperature stability 800° C

GF-822

AD | DS | SW33

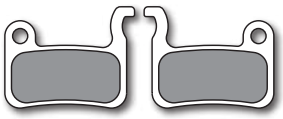

Shimano XTR BR-M965/M966
XT M765 LX-BR585, Hone M601
Shimano Deore XT BR-M775

A/B: 34,3 × 26,74 × 3,9

GF-823

AD | DS | SW33

Hope Mini

26,7 × 31,15 × 3,9

GF-824

AD | DS | SW33

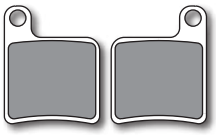

Giant MPH 2001 - 2005

A/B: 25,2 × 31,15 × 3,9

GF-825

AD | DS | SW33

1 set = 4 pcs

Hope M4

19,95 × 27,8 × 4,3

GF-827

AD | DS | SW33

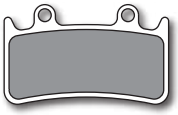

Hope Mono 6ti

43,5 × 26,35 × 3,8

GF-828

AD | DS | SW33

Hope Mono Mini

29,9 × 27,64 × 3,8

GF-829

AD | DS | SW33

Hayes El Camino

A/B: 26,5 × 32,45 × 3,8

GF-830

AD | DS | SW33

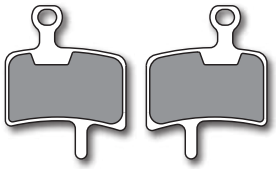

Diatech Anchor/Armor

A/B: 31,9 × 40,5 × 3,9

GF-831

AD | DS | SW33

Hope 2 piston

25,2 × 31,15 × 4

GF-832

AD | DS | SW33

Hayes MX 2/Sole

20,5 × 28,55 × 4

GF-833

AD | DS | SW33

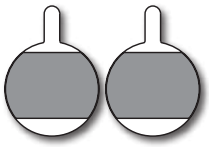

Promax Mechanical

A: 24,9 × 34,4 × 5,4
B: 24,9 × 34,4 × 3,9

GF-834

AD | DS | SW33

Formula Oro Hydraulic

27 × 34 × 3,9

GF-835

AD | DS | SW33

Avid BB5 Mechanical

ø 23,8 × 37 × 3,9

GF-836

AD | DS | SW33

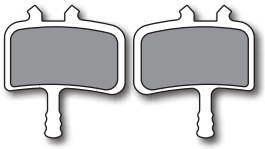

Avid mech. BB7 juicy
5 - 7 Hydraulic

A/B: 31,9 × 35,15 × 4

GOLD fren

Sintered MTB Brake Pads with high braking effectivity temperature stability 800° C

GF-837

AD | DS | SW33

Avid Code 4-piston

41,1 × 34,9 × 4

GF-838

AD | DS | SW33

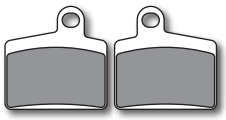

Hayes Ryde

A/B: 26,95 × 27,22 × 4

GF-839

AD | DS | SW33

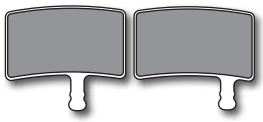

Hayes Stroker Trail

A/B: 31,8 × 27,7 × 4

GF-840

AD | DS | SW33

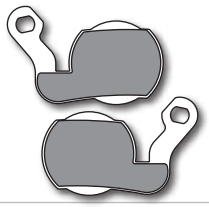

Magura Louise 2007

A/B: 41,2 × 25,95 × 3,9

GF-841

AD | DS | SW33

Formula Mag & The One

28,1 × 33,37 × 4

GF-842

AD | DS | SW33

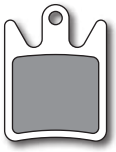

Hope Moto V2

26,95 × 36,1 × 4

GF-843

AD | DS | SW33

Avid Elixir

29,8 × 34,3 × 3,9

GF-844

AD | DS | SW33

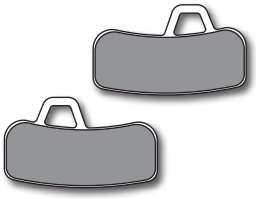

Hayes Stroker Ace

A/B: 40,45 × 23,85 × 3,9

GF-846

AD | DS | SW33

Shimano Saint 2009

39,4 × 24,45 × 3,9

GF-847

AD | DS | SW33

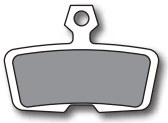

Avid Code – R

40,8 × 28,3 × 3,9

GF-848

AD | DS | SW33

Shimano XTR 2011
Shimano M985

32,3 × 29,7 × 3,9

GF-849

AD | DS | SW33

SR Suntour Hydraulic

23 × 28,2 × 4

GF-850

AD | DS | SW33

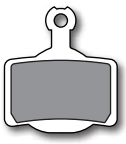

Magura 2011
MT2/ MT4/ MT6/ MT8

29,8 × 33,8 × 3,9

GF-851

AD | DS | SW33

Hope Mono Trail

27 × 34,5 × 3,9

GOLD fren

Sintered MTB Brake Pads with high braking effectivity temperature stability 800° C

GF-852

AD DS SW33

Hayes Prime

31,85 × 34,1 × 4

GF-853

AD DS SW33

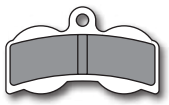

Hope XC 4-piston w/ pin & spring

40,5 × 23 × 4,4

GF-854

AD DS SW33

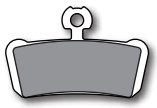

Avid XO trail 4-piston

37,7 × 24,3 × 3,9

GF-855

AD DS SW33

Hope Mono X2

26,65 × 31 × 3,9

GF-856

AD DS SW33

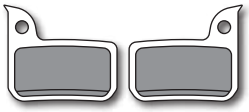

Avid Road hydraulic

A/B: 29,9 × 24,4 × 3,9

GF-857

AD DS SW33

Hope Moto V4

40 × 22,5 × 3,9

GF-858

AD DS SW33

Tektro Dorado e-bike

38,2 × 35,7 × 3,9

GF-859

AD DS SW33

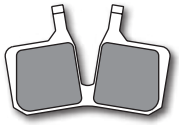

Magura MT5

43,6 × 29,2 × 3,4

GF-860

AD DS SW33

1 set = 4 pcs

Magura MT7

18,9 × 29,7 × 3,6

GF-861

AD DS SW33

Shimano Direct-Mount R9170/ U5000/RS805/505/R405F/ R405R/RS305R/RS305F

26 × 29,8 × 4,15

GF-862

AD DS SW33

HOPE TECH 3 E4 / Stealth race E4 / Mono M4 / TECH M4

36,9 × 26 × 4

GF-863

AD DS SW33

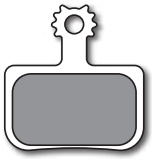

Avid DB1 Hydraulic

29,8 × 31,1 × 4

GF-865

AD DS SW33

HAYES DOMINION A4

43,2 × 30,7 × 3,95

GF-866

AD DS SW33

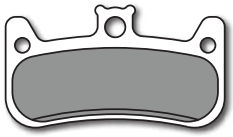

FORMULA CURA 4

43,9 × 24,7 × 3,95

It is commonly known fact that sintered brake pads have much longer life than organic materials brake pads. Sintered brake pads consist of baking plate with galvanized surface finish and braking compound with main proportion of copper additives.

GOLDfren brake pads are made in Europe, their quality is very high and their price is very good. GOLDfren brake pads are used as spare parts for the best MTB brands worldwide. They can be used for both racing and everday use. They are the best choice.

We can also supply springs and pins on demand.

GOLDfren MTB brake pads have been manufactured since 2003 and selecting the right compound for your needs is very important.

GOLDfren offers three sintered compounds: AD, DS and SW33. Both are economical and suited for all brake discs.

Dimensions: width × height × thickness (mm)

Comparison table

Type	A2Z	EBC
801		CFA247A, CFA247B
802		
803		CFA286
804		CFA326
805		
806		
807	600 / 006	CFA310
808	AZ - 200	CFA277
809		CFA311
810	AZ - 700	CFA330
811	AZ - 120	CFA280
812		
813	620 / 008	CFA327
814		CFA288
815		CFA284A
816	AZ - 510	CFA329
817	AZ - 270	CFA309
818	AZ - 130	CFA331
819	AZ - 310	CFA325
820	AZ - 140	CFA360
821		
822	AZ - 630	CFA370
823	AZ - 550	CFA318
824		CFA338
825	AZ - 530	
827	AZ - 520	CFA385
828	AZ - 510	CFA386
829	AZ - 231	CFA404
830	AZ - 740	CFA364
831	AZ - 500	CFA333
832	AZ - 220	CFA421
833	AZ - 720	CFA378

Type	A2Z	EBC
834	AZ - 320	CFA402
835	AZ - 280	CFA439
836	AZ - 290	CFA394
837	AZ - 295	CFA440
838	AZ - 260	CFA838
839	AZ - 250	CFA467
840	AZ - 150	CFA449
841	AZ - 330	CFA470
842	AZ - 580	CFA469
843	AZ - 296	CFA472
844	AZ - 241	CFA494
845		
846	AZ - 640	CFA493
847	AZ - 294	CFA616
848	AZ - 635	CFA614
849	AZ - 730	CFA341
850	AZ - 160	CFA619
851	AZ - 570	CFA422
852	AZ - 261	CFA620
853	AZ - 540	CFA300
854	AZ - 293	CFA633
855		CFA487
856	AZ - 297	CFA667
857	AZ - 585	CFA639
858	AZ - 705	CFA695
859	AZ - 175	CFA689
860	AZ - 170	CFA660/4
861	AZ - 625	
862	AZ - 586	CFA647
863	AZ - 298	
865	AZ - 240	
866	AZ - 340	

GOLD fren®

Sport, hobby & industrial brakes

Cars

Bikes

Kart Attack

Industrial brakes

Aircrafts

SPACEK PRODUCT
Poběžovice 29, 534 01 Holice
Czech Republic
Tel.: +420 466 682 065
Fax: +420 466 682 027
E-mail: goldfren@goldfren.com

EUROPEAN UNION
European Regional Development Fund
Operational Programme Enterprise
and Innovations for Competitiveness

www.goldfren.com